# TELETYPESETTER®

BULLETIN 75B

## ADJUSTMENTS AND LUBRICATION FOR THE TOU 75 OPERATING UNIT

FAIRCHILD
GRAPHIC EQUIPMENT
A DIVISION OF FAIRCHILD CAMERA AND INSTRUMENT CORPORATION

221 FAIRCHILD AVENUE, PLAINVIEW, L.I., NEW YORK

# TELETYPESETTER®

**BULLETIN 75B**

## ADJUSTMENTS AND LUBRICATION FOR THE TOU 75 OPERATING UNIT

FAIRCHILD
GRAPHIC EQUIPMENT
A DIVISION OF FAIRCHILD CAMERA AND INSTRUMENT CORPORATION
221 FAIRCHILD AVENUE, PLAINVIEW, L.I., N.Y.

Copyright 1965 by Fairchild Camera and Instrument Corp.
Copyright in all countries participating in International Convention and Pan American Conventions. All rights reserved including rights of translations into all languages.

Printed in U.S.A.

# INTRODUCTION

The maintenance of Teletypesetter equipment requires a certain amount of mechanical ability and, therefore, should only be attempted by personnel who have this ability.

*Fairchild Graphic Equipment* maintains a school for the purpose of training our customers' personnel in the maintenance of Teletypesetter equipment and it is strongly recommended that all personnel assigned to the maintenance of Teletypesetter equipment attend the complete course; there is no tuition charge for this service.

This Bulletin is meant to supplement, not to replace, the maintenance training which is available at the Teletypesetter school.

## LIST OF EFFECTIVE PAGES

## APRIL 1965

| Page Number | Change In Effect |
|---|---|
| PAGES 13-35-36 | CHANGE 1 |
| | ORIGINAL |
| | ORIGINAL |
| | ORIGINAL |
| ALL OTHER PAGES | ORIGINAL |
| | ORIGINAL |
| | ORIGINAL |
| | ORIGINAL |
| | ORIGINAL |
| | ORIGINAL |
| | ORIGINAL |
| | ORIGINAL |
| | ORIGINAL |

The above list indicates the effective pages as of the date of issue. When a change takes place in any of the following pages, this page likewise changes.

This bulletin supersedes all previous bulletins issued on the 750 OPM Operating Unit.

Page

1. GENERAL DESCRIPTION ..... E
2. ADJUSTMENTS
   a. GENERAL ..... F
   b. INSTRUCTIONS
      (1) Removing Operating Unit From Linecasting Machine ..... F
      (2) Removing Selecting Assembly ..... 9
      (3) Removing Code Lever And Contact Assembly ..... 14
      (4) Replacing Code Lever And Contact Assembly ..... 16
      (5) Replacing Selecting Assembly ..... 23
      (6) Replacing Tape Feed Stop Bail Operating Lever And Link ..... 25
      (7) Mounting Operating Unit On Linecasting Machine ..... 40
   c. OPERATING UNIT
      Blocking Code Bar Extension ..... 11
      Blocking Arm Latch ..... 34
      Clutch Magnet Coil ..... 37
      Clutch Magnet Switch ..... 37
      Clutch Magnet Mounting Plate ..... 37
      Code Bar Extension Detent ..... 10
      Code Bar Extension Detent Adjusting Screw ..... 36
      Code Bar Extension Detent Roller ..... 1
      Code Bar Extension Retaining Plate ..... 10
      Code Bar Guides ..... 2
      Code Lever And Function Contacts ..... 38
      Contact Pin Guide ..... 24
      Delay Cam Follower Arm Roller ..... 15
      Delay Cam Follower Arm Shim ..... 39
      Delay Control ..... 51
      Delay Feed Pawl Operating lever ..... 32
      Delay Push Bail Adjusting Screw ..... 32
      Delay Selector Lever Operating Arm ..... 35
      Delay Selector Operating Arm Stop ..... 35
      Delivery Slide Arm Follower ..... 49
      Delivery Slide Fork ..... 45
      Delivery Slide Fork Floating Lever Eccentric ..... 45
      Depressing Bail Bearing Bracket ..... 16
      Depressing Bail Roller Bracket Shims ..... 16
      Drive Shaft Bearing ..... 9

| | Page |
|---|---|
| Drive Shaft Collar | 9 |
| Drive Shaft Gear Play | 9 |
| Elevator Arm Shaft | 43 |
| Elevator Arm Shaft End Nuts | 43 |
| Elevator Bell Crank Latching Link Backstop Screw | 13 |
| Elevator Bell Crank Latch Bracket | 13 |
| Elevator Cam Roller Casting Adjusting Screw | 43 |
| Elevator Cam Switch | 21 |
| Elevator Clutch Reset Lever Adjusting Screw | 20 |
| Elevator Handle and Cam Roller | 43 |
| Elevator Safety Latch Stop Screw | 49 |
| Feed Wheel Detent | 26 |
| Function Blocking Arm Position | 15 |
| Keylever Bell Crank | 41 |
| Keylever Bell Crank Bearing | 7 |
| Latch Release Arm Shims | 39 |
| Lateral Rail Cap | 48 |
| Lateral Rail Stop Screw | 48 |
| Lower Rail Push Bar Lever Screw | 47 |
| Operating Unit Position | 40 |
| Pulley Shaft Bearing | 17 |
| Ratchet Bearing Bracket | 31 |
| Reed Knife Timing Cam | 41 |
| Retaining Lid Latch Wearing Strip | 24 |
| Retaining Lid Plate | 26 |
| Repeat Blocking Arm Detent Shims | 39 |
| Repeat Blocking Arm Shims | 39 |
| Safety Latch | 49 |
| Second Transfer Installation | 22 |
| Second Bail Adjusting Screw | 36 |
| Selector and Elevator Shaft Clutch | 17 |
| Selector and Elevator Shaft End Play | 12 |
| Selecting Assembly, "First Transfer" | 28 |
| Selector Clutch Reset Lever Adjusting Screw | 18 |
| Selector Clutch Helper | 19 |
| Selector Lever Bail Adjusting Screw | 27 |
| Selector Trip Arm Extension | 44 |
| Shift Latch | 7 |

Page

Shift Lever Adjusting Screw ..... 6
Space Band Pushbar Contact ..... 5
Space Band Magnet ..... 42
Spreader Cam Shaft Bearing ..... 3
Spreader Cam Shaft Timing ..... 23
Step Down Transformer ..... 41-51
Stop Rail ..... 23
Tape Feed Lever Adjusting Screw ..... 29
Tape Feed Blocking Extension ..... 33
Tape Feed Blocking Arm Upper Extension ..... 34
Tape Feed Stop Bail Operating Lever ..... 25
Tape Feed Stop Bail Operating Lever Eccentric ..... 30
Tape-Out Contact ..... 24
Tape Guide ..... 26
Tape Space ..... 26
Time Delay ..... 33
Timing Hub Position ..... 31
Top Plate ..... 26
Top Plate Guide Nut ..... 26
Top Plate Upstop Screw ..... 25
Transfer Bail Adjusting Screw ..... 28
Transfer Bail Eccentric Shaft ..... 27
Upper Rail Push Bar Lever Screw ..... 47
Variable Puller Adjustment ..... 51
Vertical Link ..... 48

d. PROPOSED ADJUSTMENT SEQUENCE ..... G-H

**3. SPRING TENSIONS**

Blocking Arm Latch ..... 35
Block Bar Extension Pawl ..... 1
Code Bar Extension Detent ..... 10
Code Lever ..... 38
Delay Cam Follower Arm ..... 15
Delay Feed Pawl ..... 32
Delay Retaining Pawl ..... 31
Delay Selector Lever Operating Arm ..... 35
Delivery Slide Bar ..... 43
Depressing Bail ..... 16
Elevator Bell Crank ..... 14

Page

Elevator Bell Crank Latch ..... 13
Elevator Clutch Throwout Lever Latch ..... 20
Elevator Counterbalance ..... 43
Elevator Safety ..... 44
Feed Wheel Detent ..... 23
Keylever Bell Crank ..... 2
Latch Release Arm ..... 35
Lateral Rail ..... 46
Lateral Rail Manual Lever Detent ..... 45
Lower Push Bar ..... 2
Operating Bail Roller Arm ..... 3
Repeat Blocking Arm Detent ..... 10
Safety Latch ..... 47
Selector and Elevator Clutch ..... 20
Selector and Elevator Clutch Detent ..... 14
Selector and Elevator Clutch Throwout Lever ..... 20
Selector Clutch Release Bail ..... 18
Selector Lever Bail ..... 29
Selector Lever Bail Yield ..... 29
Selector Lever ..... 29
Selector Trip Arm Detent ..... 44
Shift Latch ..... 6
Shift Lever ..... 6
Stop Arm ..... 33
Tape Feed Lever ..... 29
Tape Feed Lever Extension ..... 33
Tape Feed Pawl ..... 24
Tape Feed Stop Bail ..... 30
Tape Feed Stop Bail Latch ..... 30
Top Plate ..... 25
1st Transfer Bail ..... 28
1st Transfer Bail Yield ..... 27
Upper and Lower Rail Push Bar ..... 7
Upper Push Bar ..... 2
Vertical Link ..... 45
Yield Lever ..... 4

**4. LUBRICATION** ..... 52, 53-54

## 1. GENERAL DESCRIPTION

The TOU 75, Teletypesetter Operating Unit, is designed to operate all models of modern high output linecasting machines at or beyond their rated capacity. A six-unit fully perforated tape is the medium of control.

Functionally the operating unit performs as follows: operates the required keylevers and the assembling elevator; controls the upper and lower rail (duplex rail) position: provides for the necessary delay of tape feeding during the positioning of the duplex rail: automatically recognizes a repeat character or digit and provides a one-cycle delay between each repeated character; operates electrical contacts to provide regulated pulses for the control of auxiliary circuits; and provides an electrically operated safety feature for idling the machine in case the perforated tape ends, becomes taut or in the event that certain conditions arise in the linecasting machine.

The perforator operator may justify certain short lines by back spacing the tape and perforating the 0-Code (thin-space) in each space band (3-Code) perforation to increase the spacing between words. When the 0-3 combination is sensed by the operating unit, the add-thin space functions to drop the space band and the thin space matrices in sequence.

The code combination for the various functions and characters are shown in the figure below.

An electrical control is incorporated in the Operating Unit to provide control of assembly when spacebands are delivered. It may be adjusted for optimum control of the individual linecasting machine. In addition, an electrical tape stop mechanism is incorporated. This mechanism may be wired to a chosen code lever contact and will idle the machine when the code for the lever is sensed. A reset button for restarting the machine is provided.

| SHIFT / Unshift | Tape Feed | T / t | Return | O / o | Space Band | N / n | H / h | M / m | Elevate | I / i | R / r | C / c | L / l | P / p | G / g | V / v | E / e | A / a | S / s | U / u | D / d | J / j | F / f | K / k | Z / z | W / w | Y / y | Q / q | B / b | Shift | X / x | Unshift | Thin Space | ? / 3/4 | P.F. or L.M. | ! / 1/4 | Add-Thin Space | Em Space | - / 1/8 | & | 7 / 1/3 | ¢ | @ / 1/2 | * | Bell | Comma | Quad Left | En Space | Q.R. or U.M. | % / 1/6 | ( | 5 | V.Rule | Em Sp | 2 / 1/4 | Em Leader | 6 / 3/4 | ? | En Leader | 9 / ff | Upper Rail | : | Lower Rail | Period | fi / 3/8 | Quad Center | Rub Out |
|---|---|---

## 2. ADJUSTMENTS

a. GENERAL

(1) The sequence in which the following adjustments are arranged takes into consideration the normal approach to the mechanism and the fact that a change in one adjustment may affect others. Adjustments should not be disturbed unnecessarily. After performing any adjustment, check related adjustments.

NOTE: In all the figures of this bulletin, fixed pivot points are designated by solid black circles. A cycle refers to the sequence of movements of associated mechanisms during one complete revolution of the selector shaft. In the following text, the terms, left, right, front, rear, upper, and lower, refer to the normal position of the operating unit as viewed from the front, when installed on the linecasting machine.

(2) When it is necessary to remove the operating unit from the slug linecasting machine for servicing, proceed as follows:

b. INSTRUCTIONS

(1) REMOVING THE OPERATING UNIT FROM THE LINECASTING MACHINE

Remove the driving belt.

Disconnect the electrical connectors at the rear of the unit.

Remove wind-unwind assembly.

Back off the knurled clamping screw mounted on the keyboard base casting.

Disconnect reed knife linkage at knife by removing snap ring. (INTERTYPE MONARCH-KEYBOARD-LESS)

Remove the pilot screw or locating pin on each hanger.

Remove the operating unit from the slug linecasting machine.

NOTE: Unless otherwise specified, all adjustments shown in this Bulletin are common to:

TOU 75-1 for Intertype-Keyboardless Monarch
TOU 75-2 for Linotype Comet
TOU 75-3 for Linotype Elektron
TOU 75-4 for German Linotype
TOU 75-5 for Intertype Keyboard Monarch

## PROPOSED ADJUSTMENT SEQUENCE FOR TOU 75 OPERATING UNIT

This proposed adjustment sequence is recommended when complete readjustment of the 75 Operating Unit is required.


| ADJUSTMENT NUMBER | DESCRIPTION OF ADJUSTMENT | PAGE NUMBER | RELATED ADJUSTMENT |
|---|---|---|---|
| 1 | Keylever Bell Crank Spring Tension | 2 | |
| 2 | Upper Push Bar Spring Tension | 2 | |
| 3 | Code Bar Guides | 2 | |
| 4 | Lower Push Bar Spring Tension | 2 | |
| 5 | Spreader Cam Shaft Bearing | 3 | |
| 6 | Operating Bail Roller Arm Spring Tension | 3 | |
| 7 | Yield Lever Spring Tension | 6 | |
| 8 | Shift Lever Spring Tension | 6 | |
| 9 | Shift Latch Spring Tension | 6 | |
| 10 | Shift Lever Adjusting Screw | 6 | |
| 11 | Shift Latch | 7 | |
| 12 | Upper and Lower Rail Push Bar Lever Spring Tension | 7 | |
| 13 | Keylever Bell Crank Stop | 7 | |
| | Instructions for Removing the Selecting Assembly | 9 | |
| 14 | Drive Shaft Bearing | 9 | |
| 15 | Drive Shaft Collar | 9 | |
| 16 | Drive Shaft Gear Play | 9 | |
| 17 | Selector and Elevator Shaft Clutch | 17 | |
| 18 | Pulley Shaft Bearing | 17 | |
| 19 | Selector and Elevator Shaft End Play | 12 | |
| 20 | Elevator Bell Crank Latch Bracket | 13 | 23-24 |
| 21 | Elevator Bell Crank Latch Spring Tension | 13 | |
| 22 | Elevator Bell Crank Latching Link Back Stop Screw | 13 | |
| 23 | Selector Clutch Throwout Link Eccentric | 18 | 24-25 |
| 24 | Selector Clutch Throwout Lever Adjusting Screw | 18 | |
| 25 | Selector Clutch Helper | 27 | |
| 26 | Selector Clutch Release Bail Spring Tension | 18 | |
| 27 | Elevator Clutch Reset Lever Adjusting Screw | 20 | |
| 28 | Elevator Clutch Throwout Lever Latch Spring Tension | 20 | |
| 29 | Second Transfer Installation | 20 | |
| 30 | Selector and Elevator Clutch Throwout Lever Spring Tension | 20 | |
| 31 | Selector and Elevator Clutch Spring Tension | 20 | |
| 32 | Selector and Elevator Clutch Detent Spring Tension | 14 | |
| 33 | Elevator Bell Crank Spring Tension | 14 | |
| 34 | Blocking Code Bar Extension | 11 | |
| | Instructions for Removing Code Lever and Contact Assembly | 14 | |
| 35 | Function Block Arm Position | 15 | |
| 36 | Delay Cam Follower Arm Spring Tension | 15 | |
| 37 | Delay Cam Follower Arm Roller | 15 | 89-94 |
| 38 | Code Bar Extension Detent End Play | 1 | |
| 39 | Code Bar Extension Detent Roller | 1 | |
| 40 | Block Bar Extension Pawl Spring Tension | 1 | |
| | Instructions for Replacing the Code Lever and Contact Assembly | 16 | 41-42 |
| 41 | Depressing Bail Bearing Bracket | 16 | |
| 42 | Depressing Bail Roller Bracket Shims | 16 | |
| 43 | Depressing Bail Spring Tension | 16 | |
| 44 | Code Bar Extension Detent | 10 | 95 |
| 45 | Repeat Blocking Arm Detent Spring Tension | 10 | |
| 46 | Code Bar Extension Detent Spring Tension | 10 | |
| 47 | Code Bar Extension Retaining Plate | 10 | |
| | Instructions for Replacing the Selecting Assembly | 23 | |
| 48 | Stop Rail | 23 | |
| 49 | Spreader Cam Shaft Timing | 23 | |
| 50 | Contact Pin Guide | 24 | |
| 51 | Tape-Out Contact | 24 | |
| 52 | Retaining Lid Latch Wearing Strip | 24 | |

| ADJUSTMENT NUMBER | DESCRIPTION OF ADJUSTMENT | PAGE NUMBER | RELATED ADJUSTMENT |
|---|---|---|---|
| 53 | Tape Feed Pawl Spring Tension | 24 | |
| 54 | Top Plate Spring Tension | 25 | |
| 55 | Top Plate Upstop Screw | 25 | |
| 56 | Feed Wheel Detent Spring Tension | 25 | |
| 57 | Tape Feed Stop Bail Operating Lever | 25 | |
| 58 | Tape Space | 26 | |
| 59 | Top Plate | 26 | 73-86-88 |
| 60 | Retaining Lid Plate | 26 | |
| 61 | Top Plate Guide Nut | 26 | 60 |
| 62 | Feed Wheel Detent | 26 | 73-86-88 |
| 63 | Tape Guide | 26 | 73-86-88 |
| 64 | Transfer Bail Yield Spring Tension | 27 | |
| 65 | Selector Lever Bail Adjusting Screw | 25 | 66-67-68 |
| 66 | 1st Transfer Bail Eccentric Shaft | 27 | 67-68 |
| 67 | Selecting Assembly, "First Transfer" | 28 | 65-66-68-73 81-83-86-88-95 |
| 68 | 1st Transfer Bail Adjusting Screw | 28 | 95 |
| 69 | 1st Transfer Bail Spring Tension | 28 | |
| 70 | Selector Lever Bail Yield Spring Tension | 29 | |
| 71 | Selector Lever Bail Spring Tension | 29 | |
| 72 | Selector Lever Spring Tension | 29 | |
| 73 | Tape Feed Lever Adjusting Screw | 29 | 86-88 |
| 74 | Tape Feed Bail Spring Tension | 29 | |
| 75 | Tape Feed Stop Bail Operating Lever Eccentric | 30 | |
| 76 | Tape Feed Stop Bail Spring Tension | 30 | |
| 77 | Tape Feed Stop Bail Latch Spring Tension | 30 | |
| 78 | Ratchet Bearing Bracket | 31 | 79-81-83 |
| 79 | Delay Retaining Pawl Spring Tension | 31 | |
| 80 | Timing Hub Position | 31 | |
| 81 | Delay Feed Pawl Operating Lever | 32 | 83 |
| 82 | Delay Feed Pawl Spring Tension | 32 | |
| 83 | Delay Push Bail Adjusting Screw | 32 | |
| 84 | Time Delay Adjustment | 33 | |
| 85 | Stop Arm Spring Tension | 33 | |
| 86 | Tape Feed Blocking Arm Lower Extension | 33 | 88 |
| 87 | Tape Feed Lever Extension Spring Tension | 33 | |
| 88 | Tape Feed Blocking Arm Upper Extension | 34 | |
| 89 | Blocking Arm Latch | 34 | |
| 90 | Blocking Arm Latch Spring Tension | 35 | |
| 91 | Latch Release Arm Spring Tension | 35 | |
| 92 | Delay Selector Lever Operating Arm | 35 | |
| 93 | Delay Selector Lever Operating Arm Spring Tension | 35 | |
| 94 | Delay Selector Lever Operating Arm Stop | 35 | |
| 95 | Code Bar Extension Detent Adjusting Screw | 36 | |
| 96 | Second Transfer Bail Adjusting Screw | 36 | 68 |
| 97 | Clutch Magnet Coil | 37 | |
| 98 | Clutch Magnet Unit Mounting Plate | 37 | |
| 99 | Code Lever and Function Contacts | 38 | |
| 100 | Code Lever Spring Tension | 38 | 75 |
| 101 | Delay Cam Follower Arm Shim | 41 | |
| 102 | Repeat Blocking Arm Shim | 41 | |
| 103 | Repeat Blocking Arm Detent Shim | 41 | |
| 104 | Latch Release Arm Shim | 41 | |
| 105 | Reed Knife Timing Cam | 41 | |
| 106 | Space Band Pushbar Contact | 41 | |
| 107 | Space Band Magnet | 42 | |


*Lubricate as specified on Pages 52, 53 & 54*

NOTE—To facilitate adjustment of requirements on pages 1 to 12, remove elevator shaft, push bar assembly, and second transfer mechanism.

**Procedure**—1. Remove reed knife lever bracket from rear of base casting by removing two screws and disconnecting coupling. (Intertype Monarch). Remove line delivery switch and bracket (Linotype Elektron).

2. Remove elevator cam mounting screw.
3. Trip elevator throw-out latch and rotate shaft so that clutch stop lug is up. (Page 20).
4. Unhook clutch throw-out detent spring. (Page 11).
5. Remove screw, thrust washer, and shims. (Page 9).
6. Slide elevator shaft out at rear. **Omit elevator shaft adjustments until other adjustments (preceding page 17) are completed.**
7. Remove entire push bar assembly from base casting by removing four mounting screws and disconnecting drive shaft coupling. Do not disturb eccentric stop or bell crank stop adjusting screws. Use care in removing assembly so as not to bend push bars or guide plates.
8. Remove second transfer mechanism by removing two screws from drive shaft bearing cap and unhooking yield spring.

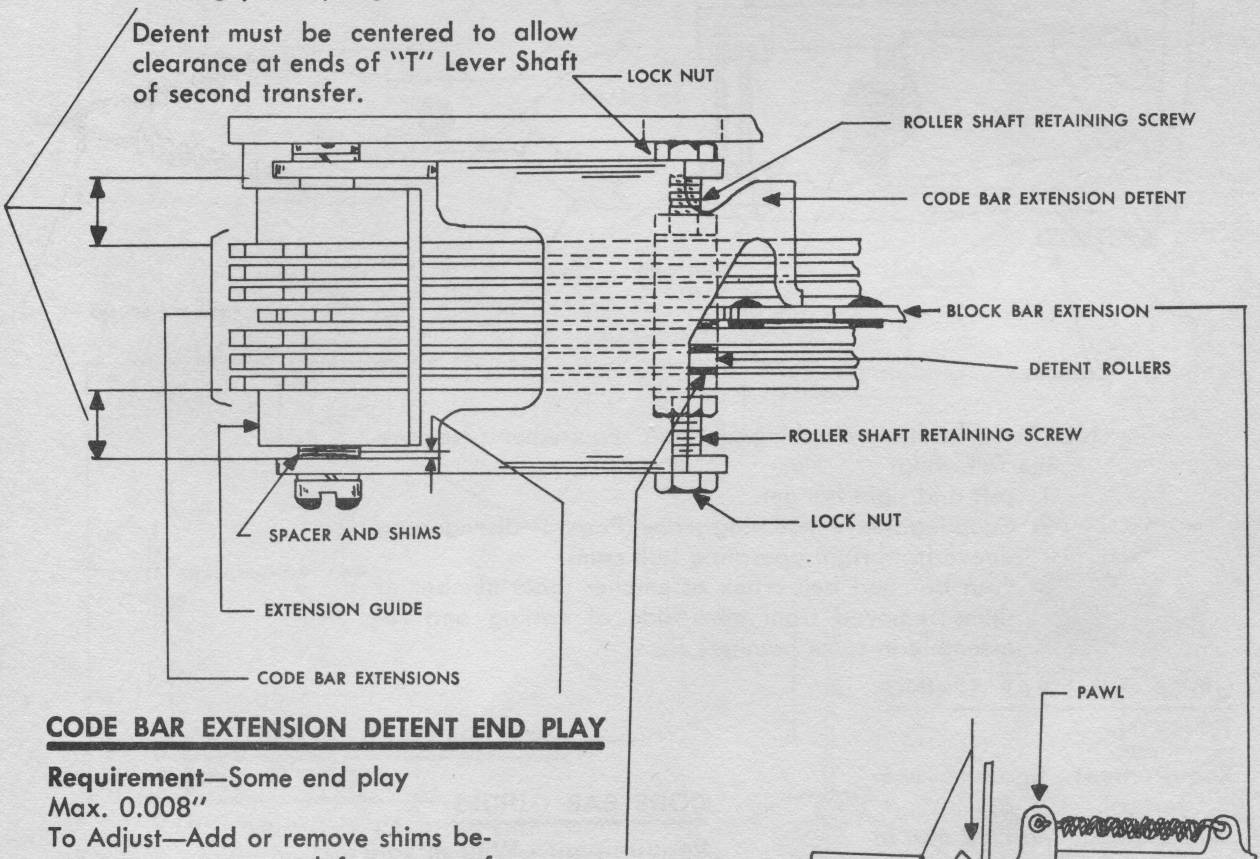


## CODE BAR EXTENSION DETENT END PLAY

**Requirement**—Some end play
Max. 0.008"
To Adjust—Add or remove shims between spacer and front arm of detent.

## CODE BAR EXTENSION DETENT ROLLER

**Requirement**—(1) Some end play between any two adjacent detent rollers.
Max. 0.005"
(2) Detent rollers centrally located with respective code bar extension when detent side play is taken up in first one direction and then the other.
To Adjust — position the two roller shaft retaining screws with lock nuts loosened.

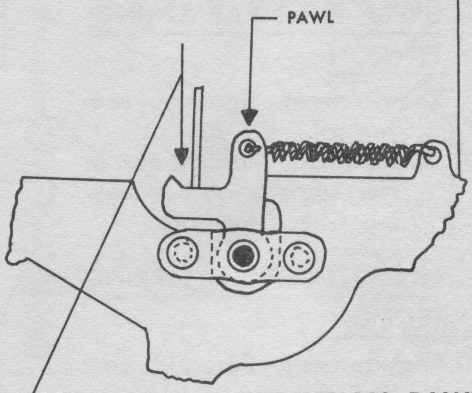


## BLOCK BAR EXTENSION PAWL SPRING TENSION

**Requirement**—With transfer bail roller just ready to start on rise of its cam move block bar extension to right and lift detent clear of the extensions.
Min. 27 ozs.—Max. 32 ozs. to start pawl moving.

## KEYLEVER BELL CRANK SPRING TENSION

**Requirement**—Bell crank resting against its backstop.

Min. 4 ozs.—Max. 6 ozs. to start bell crank moving. Check each bell crank.

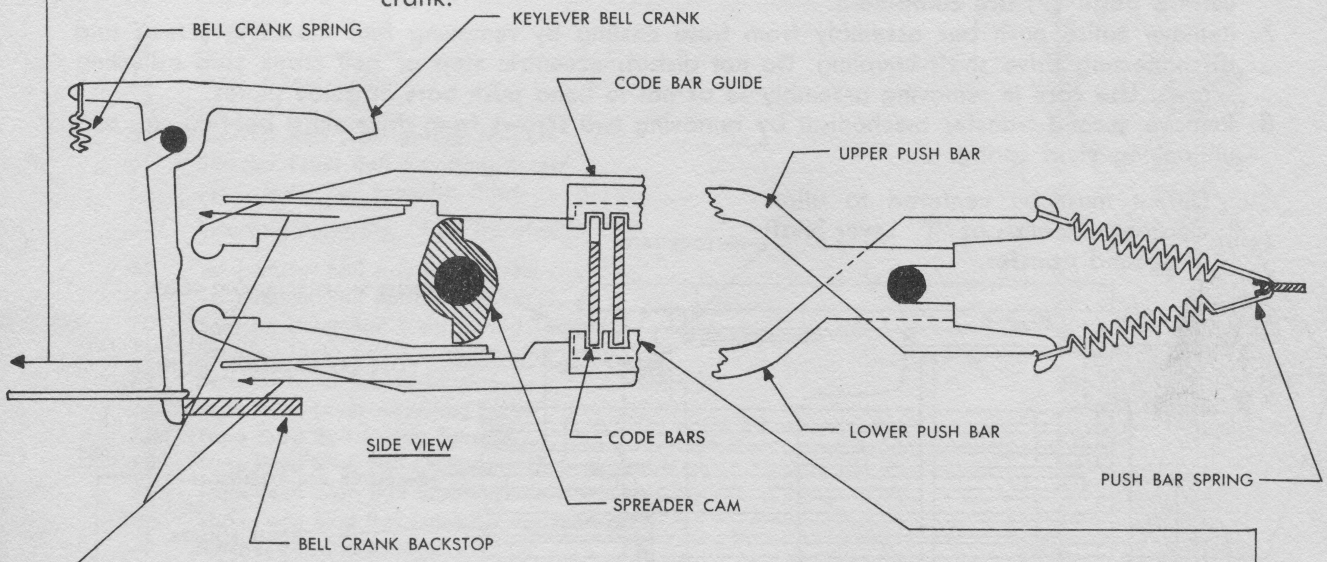


NOTE—To facilitate checking first four requirements, remove the following:

1. Left and right hanger.
2. Coupling sleeve mounting screw (Page 3—disengaging sleeve from right operating bail cam).
3. Push bar and bell crank assemblies (note number of shims removed from each side of casting and re-assemble in same manner).

## UPPER PUSH BAR SPRING TENSION

**Requirement**—Spreader cam vertical.

Min. 8½ ozs.—Max. 12 ozs. to start upper push bar moving. Check each bar.

## LOWER PUSH BAR SPRING TENSION

**Requirement**—Spreader cam vertical.

Min. 12½ ozs.—Max. 16 ozs. to start lower push bar moving. Check each bar.

## CODE BAR GUIDES

**Requirement**—With spreader cam vertical. Code bars should move freely in guide and should drop of their own weight when code bar assembly is held in vertical position.

To Adjust—Position code bar guides.

**TO ADJUST:** Position push bar spring bar with its mounting screws loosened. Tighten mounting screws.

## SPREADER CAM SHAFT BEARING

**Requirement** — Rotate spreader cam through a complete revolution with operating bail roller arm springs (lower fig.) removed. Shaft should turn without binding and have some end play.

Min. .004"—Max. .010".

To Adjust — Position the bearings to align the shaft. Position the left operating bail cam to obtain the end play.

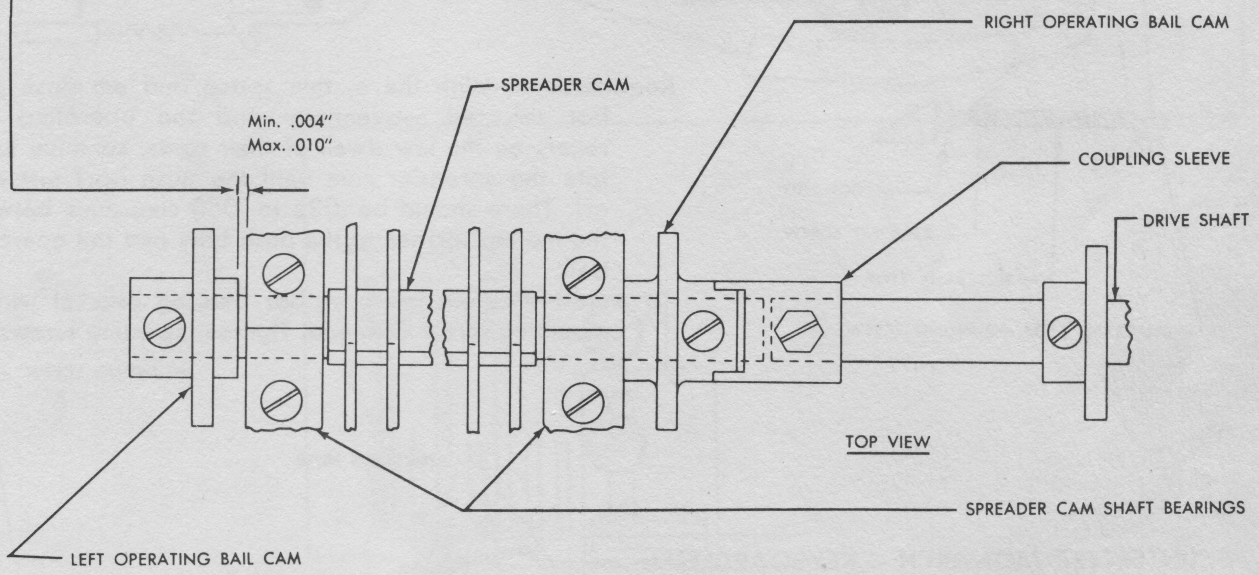


## OPERATING BAIL ROLLER ARM SPRING TENSION

**Requirement**—Operating bail cam roller on low part of its cam and bail lever springs unhooked.

Min. **3 lbs.** —Max. **4 lbs.** to stretch the spring to its installed length.

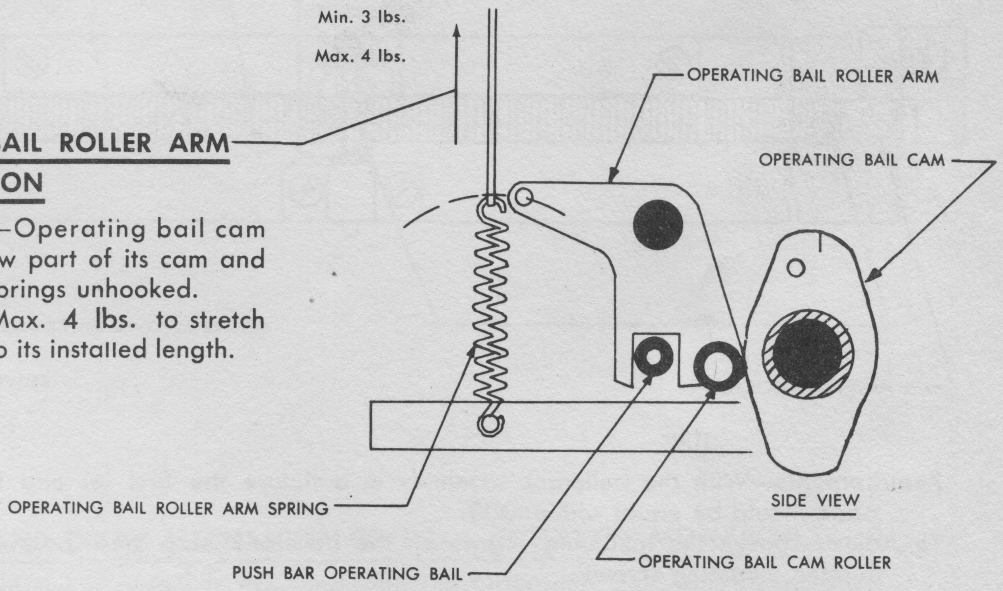

## ADDITIONAL ADJUSTMENTS FOR BELLCRANK AND PUSH BAR ASSEMBLIES OF THE TOU 75 OPERATING UNIT

**NOTE:** The following adjustments are made at the factory when the operating unit is assembled and should require readjustment only when the mounting screws have been disturbed or newly installed on the unit. If either of these changes are made, it will be necessary to check all the associated adjustments.

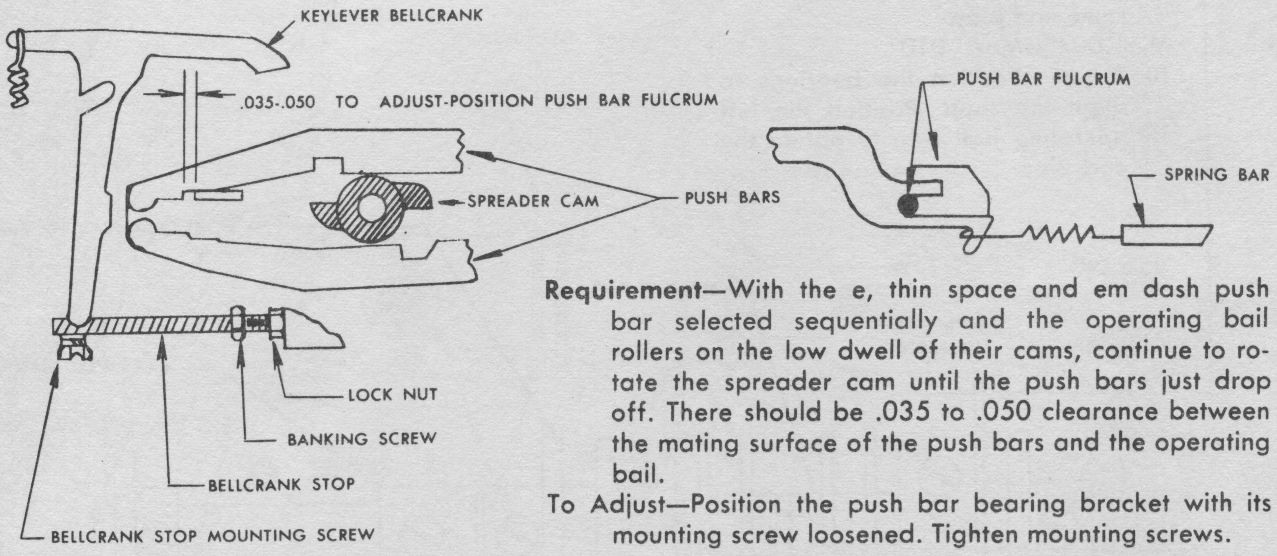


**Requirement**—With the e, thin space and em dash push bar selected sequentially and the operating bail rollers on the low dwell of their cams, continue to rotate the spreader cam until the push bars just drop off. There should be .035 to .050 clearance between the mating surface of the push bars and the operating bail.

To Adjust—Position the push bar bearing bracket with its mounting screw loosened. Tighten mounting screws.

### (INTERTYPE MONARCH — KEYBOARDLESS)

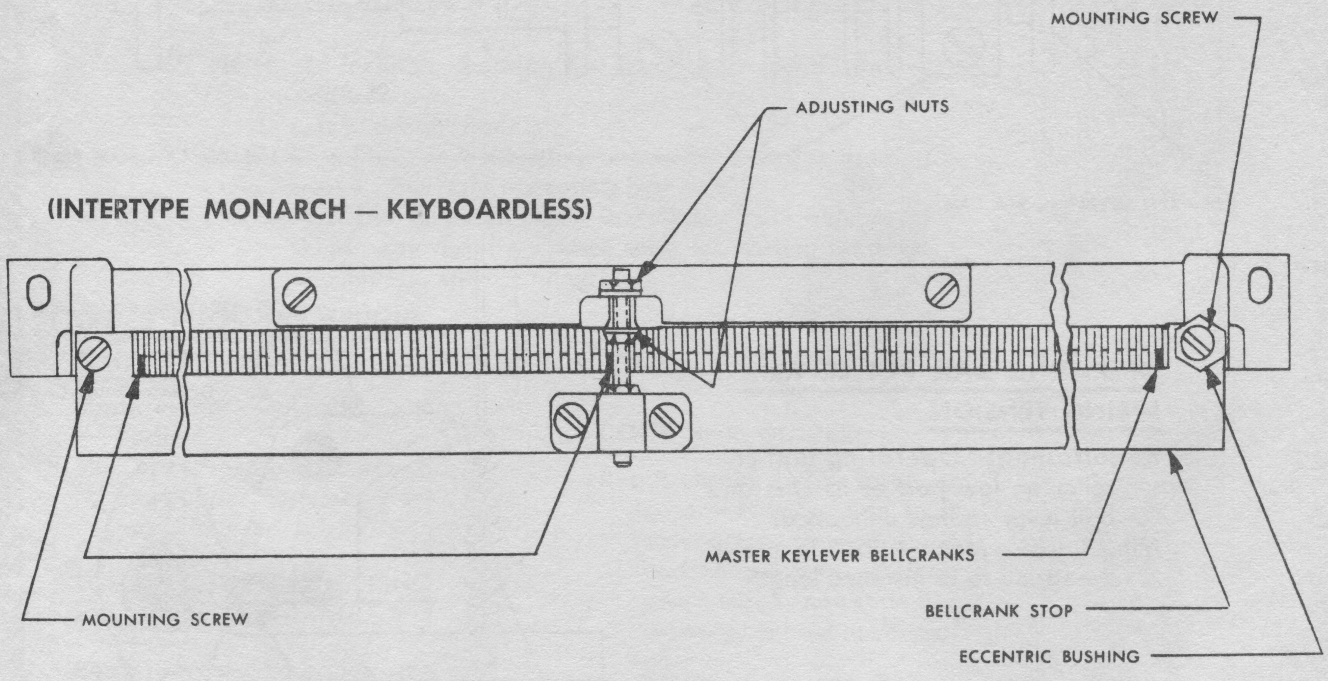


**Requirements**—With the bellcrank assembly in a fixture the first (e) and last (-) bellcrank—swaged pads should be equal within .003.

To Adjust—Loosen the mounting screws on the bellcrank stop and position the eccentric bushing. Tighten mounting screws.

**Requirement**—Center bellcrank thin space swaged pad should be within .003 of the first and last bellcrank swaged pad.

To Adjust—Position adjusting nuts to meet this requirement.

## SPACEBAND PUSH BAR CONTACT

**(INTERTYPE MONARCH — KEYBOARDLESS)**

**(INTERTYPE MONARCH — KEYBOARD)**

**(LINOTYPE ELEKTRON)**

**Requirement**—With the spaceband push bar in its unoperated position, there should be a gap of .020" to .030" between the contacts.

To Adjust—Bend fixed contact.

**Requirement**—Place a tape perforated with the spaceband code -3- in the tape guide and rotate pulley shaft until spaceband push bar has reached its extreme forward position. At this point the contacts should be made and have an overtravel of .010" to .030".

To Adjust—Position contact bracket by means of its elongated mounting holes.

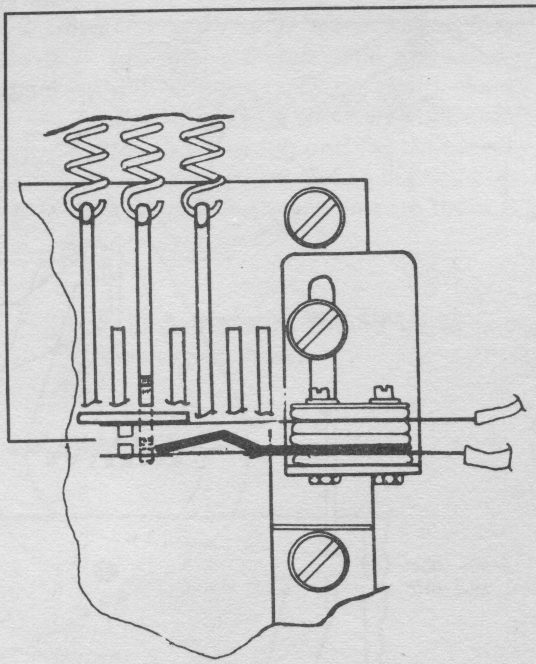

## SPACEBAND DELAY MECHANISM CONTROL (INTERTYPE MONARCH)

An electrical delay system is provided with the Operating Unit. This delay is designed to give greater control over spaceband delivery. The delay is adjustable and may be varied to control space bands as matrices are being assembled. The control knob of the delay should be set for optimum operation on each linecasting machine.

NOTE—The following five requirements may be checked with the left base plate removed.

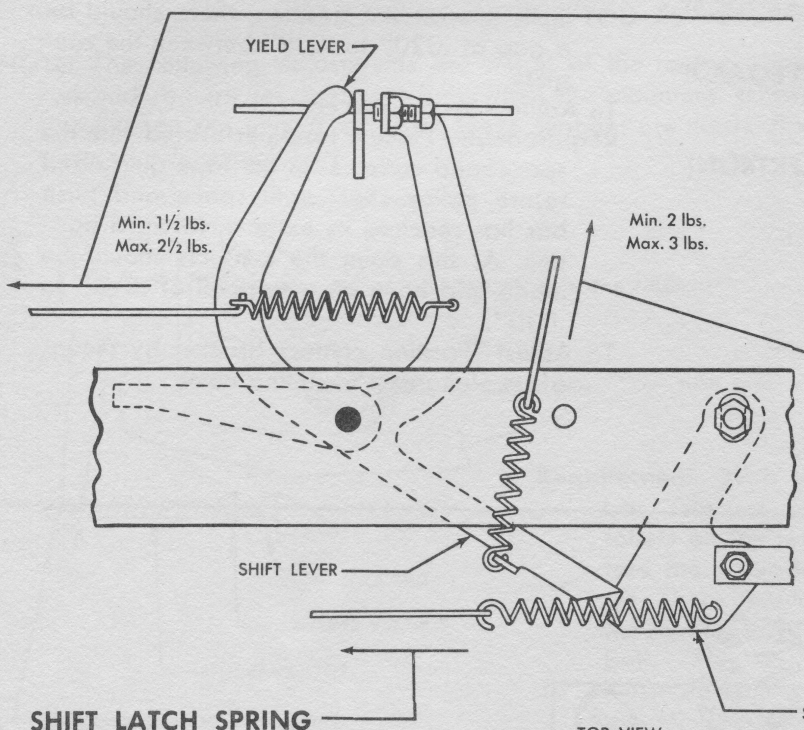


## YIELD LEVER SPRING TENSION

**Requirement**—Shift lever engaged by the shift latch and yield lever spring unhooked.

Min. 1½ lbs.—Max. 2½ lbs. to stretch spring to its installed length.

## SHIFT LEVER SPRING TENSION

**Requirement**—Shift lever engaged by shift latch and shift lever spring unhooked.

Min. 2 lbs.—Max. 3 lbs. to stretch spring to its installed length.

## SHIFT LATCH SPRING TENSION

**Requirement**—Shift lever engaged by the shift latch and shift latch spring unhooked.

Min. 3 ozs.—Max. 6 ozs. to stretch spring to installed length.

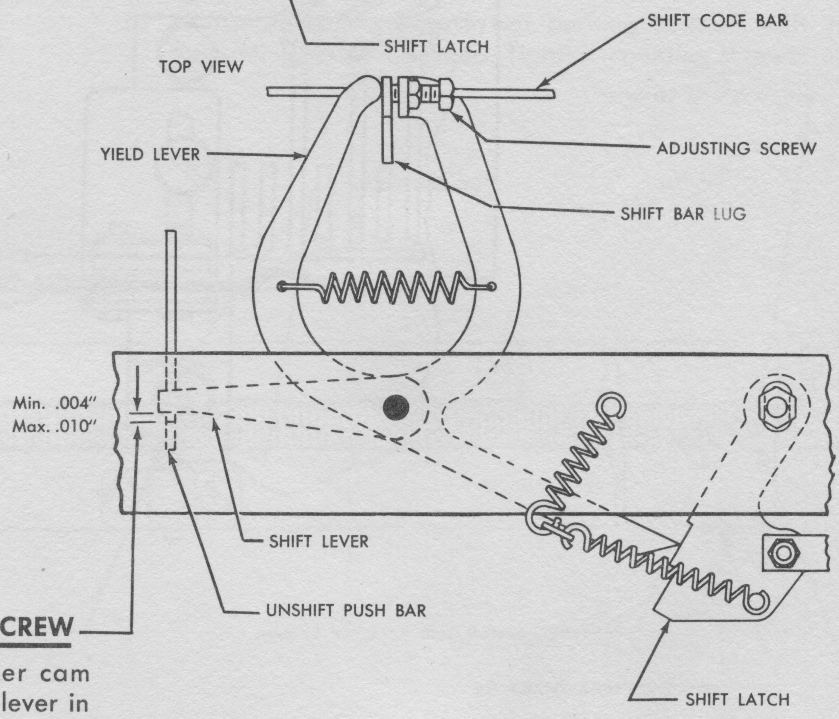


## SHIFT LEVER ADJUSTING SCREW

**Requirement**—With spreader cam (Page 5) vertical and shift lever in unlatched position, move shift code bar to shift position (extreme left). Clearance between shift lever and projection on unshift push bar.

Min. .004"—Max. .010 ".

To Adjust—Position shift lever by means of its adjusting screw.

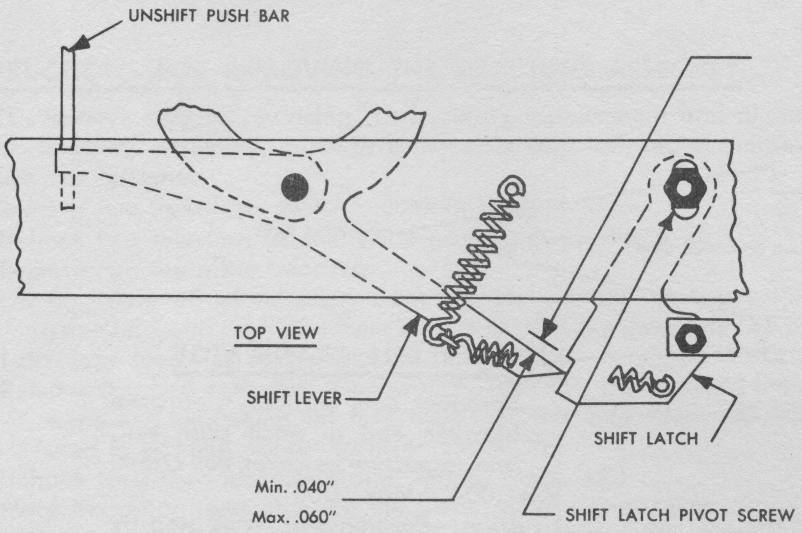


## SHIFT LATCH

**Requirement**—Spreader cam vertical. Manually move the zero code bar to left; 1, 2, 3, 4, and 5 code bars to right. Rotate pulley shaft until unshift push bar is selected and moved to its extreme forward position. If operating unit is assembled, tape with unshift code must be used. Clearance between shift lever and shoulder of latch:

Min. .040"—Max. .060"

To Adjust—Position shift latch pivot screw.

NOTE—With shift lever in latched position and shift code bar in unshift position (extreme right), there should be some clearance between the shift bar lug and the shift lever adjusting screw. Refine the two preceding adjustments in case there is no clearance.

NOTE—Bell cranks should be in line with push bars.

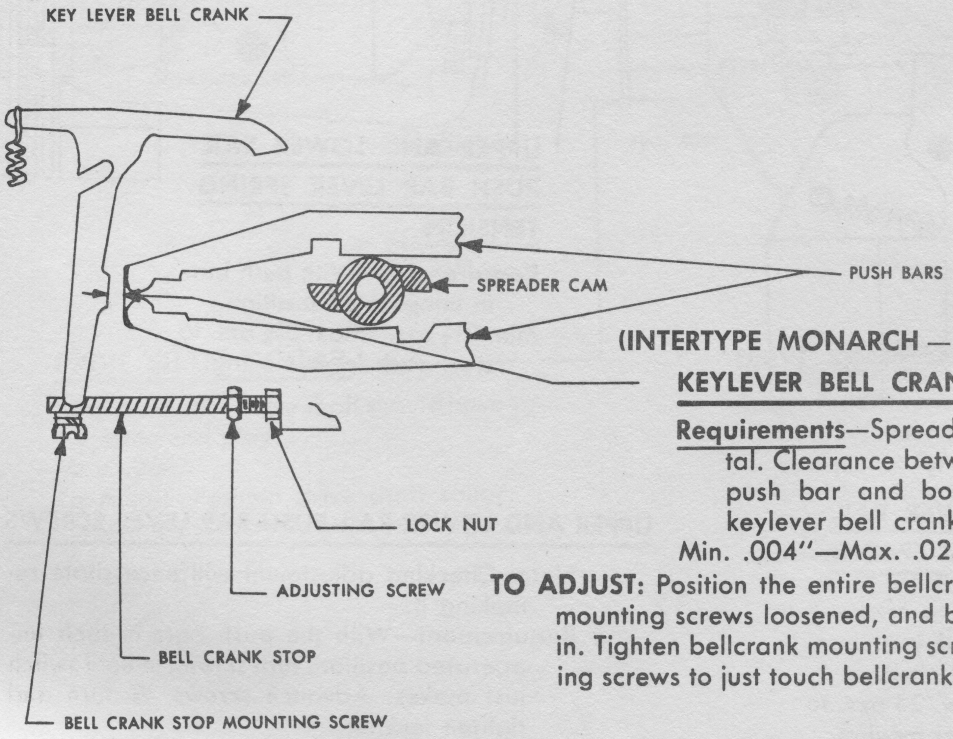


## (INTERTYPE MONARCH — KEYBOARDLESS)
## KEYLEVER BELL CRANK BEARING

**Requirements**—Spreader cam horizontal. Clearance between end of each push bar and boss on respective keylever bell crank:

Min. .004"—Max. .025"

**TO ADJUST:** Position the entire bellcrank assembly with its mounting screws loosened, and banking screws turned in. Tighten bellcrank mounting screws and adjust banking screws to just touch bellcrank stop.

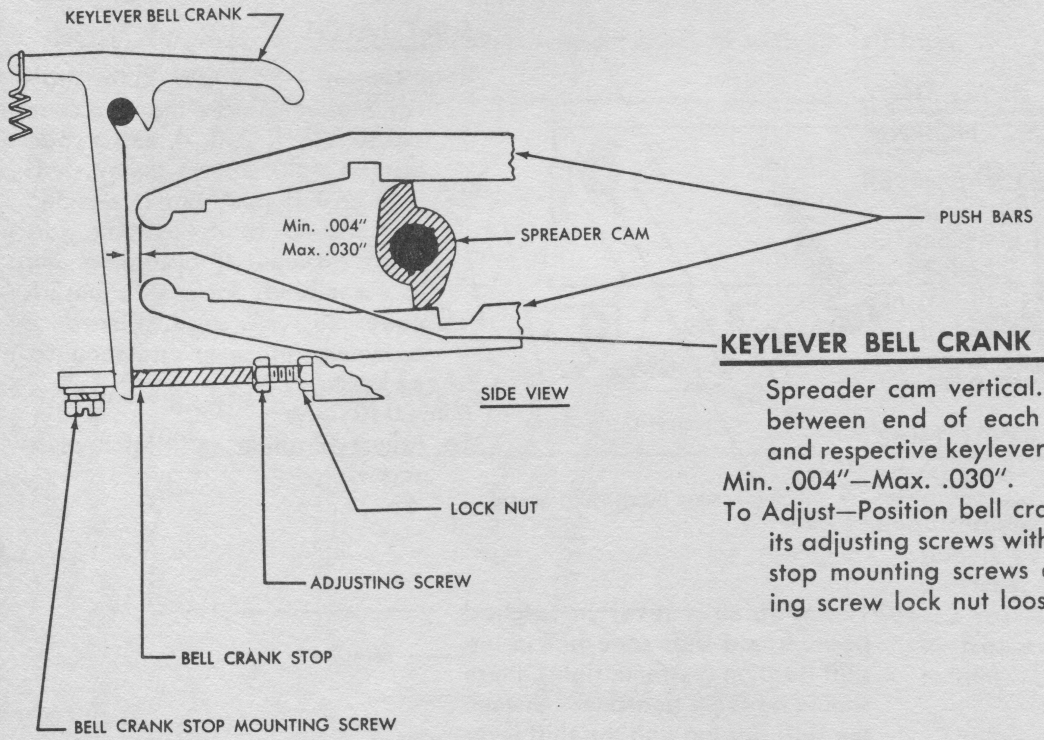


## KEYLEVER BELL CRANK STOP

Spreader cam vertical. Clearance between end of each push bar, and respective keylever bell crank.

Min. .004"—Max. .030".

To Adjust—Position bell crank stop by its adjusting screws with bell crank stop mounting screws and adjusting screw lock nut loosened.

## (LINOTYPE ELEKTRON)

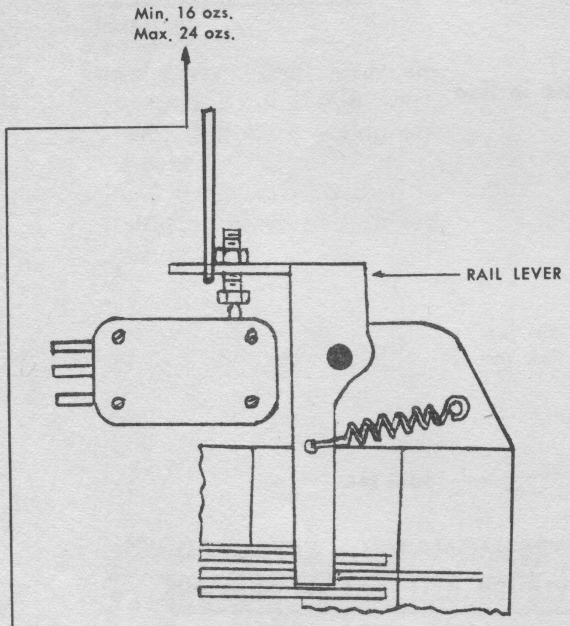


## UPPER AND LOWER RAIL PUSH BAR LEVER SPRING TENSION

**Requirement**—With push bars in unoperated position.

Min. 16 ozs.—Max. 24 ozs. to start each lever moving.

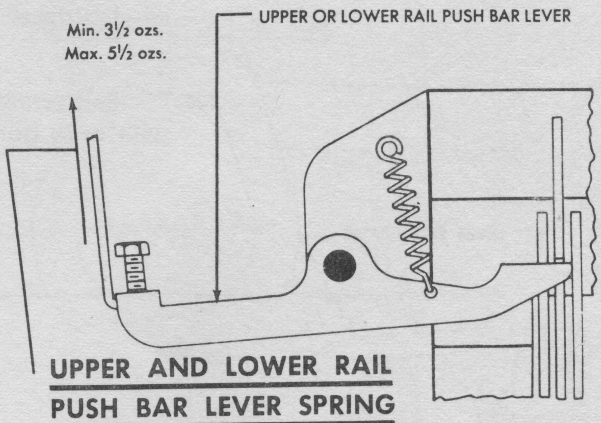


## UPPER AND LOWER RAIL PUSH BAR LEVER SPRING TENSION

**Requirement**—With push bars in unoperated position.

Min. 3½ ozs.—Max. 5½ ozs. to start each lever moving.

## UPPER AND LOWER RAIL PUSH BAR LEVER SCREWS

Note: Checking adjustment will necessitate remaking it.

**Requirement**—With the push bars in their unoperated position, turn screws in until switch just makes. Advance screws ½ turn and tighten locknut.

## INSTRUCTIONS FOR REMOVING THE SELECTING ASSEMBLY

NOTE—Remove only for servicing. To facilitate replacement and alignment of selecting assembly, make sure that rear stop rail and eccentric stop are not loosened.

Remove two tight tape switch mounting bracket screws.

Unhook two selecting assembly top plate springs. (Page 25.)

Remove two top plate bearings.

Lift top plate off of selecting assembly and remove tape out contact assembly (with push pin) from bottom of selecting assembly top plate.

Latch tape feed stop bail. (Page 30.)

Remove stop bail operating lever and link assembly by removing shoulder screw and unhooking link from tape feed stop bail. Retain all spacers used to position operating lever. (Page 38.)

Unhook tape feed lever extension spring. (Page 33.)

Place the delay feed pawl on the delay guide clamp plate. (Page 31.)

With no tape in tape guide, rotate selector shaft 180° from its stop position. Remove three selecting assembly mounting screws, and front guide rail. Manually raise transfer bail as high as possible. Then raise selecting assembly until its base plate mounting screws clear base casting. Slide selecting assembly forward and to right as it is removed from operating unit.

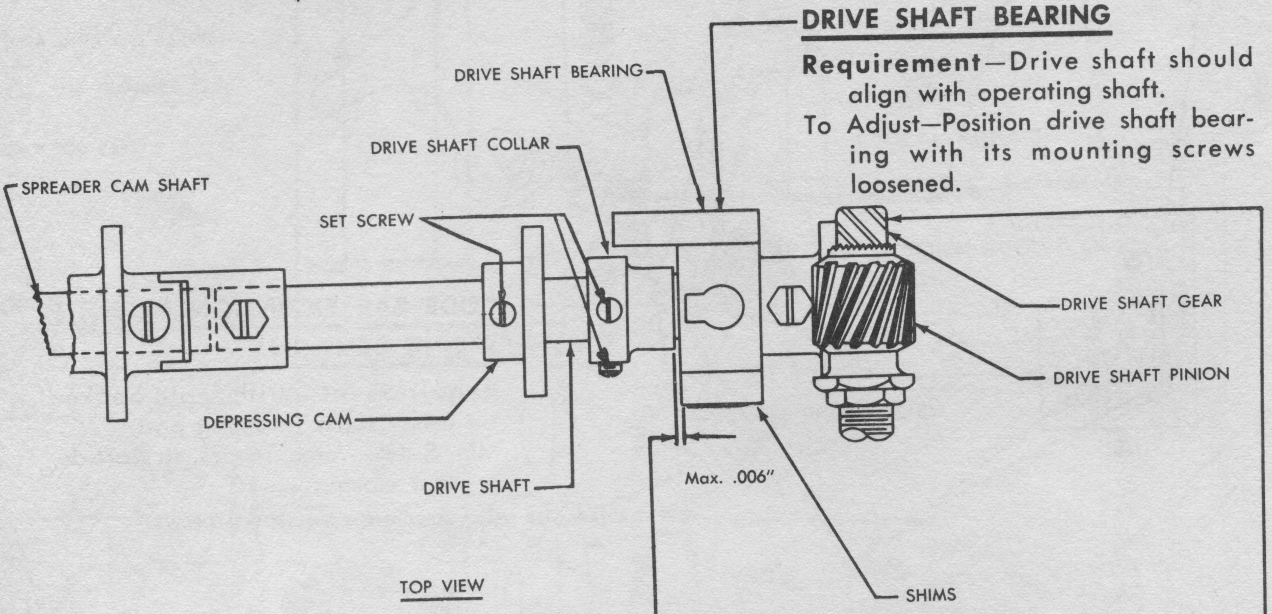


### DRIVE SHAFT BEARING

**Requirement**—Drive shaft should align with operating shaft.

To Adjust—Position drive shaft bearing with its mounting screws loosened.

### DRIVE SHAFT COLLAR

**Requirement**—Drive shaft should have some end play.

Max. .006".

To Adjust—Position drive shaft collar with its set screws loosened.

### DRIVE SHAFT GEAR PLAY

**Requirement**—Minimum play, without binding, between drive shaft gear and pinion for complete revolution of drive shaft gear.

To Adjust—Add or remove shims between drive shaft bearing and the base. Recheck drive shaft bearing adjustment.

## CODE BAR EXTENSION DETENT

**Requirement**—With the repeat blocking arm moved to the left (past its detent, but not held manually), the clearance between the lower left extension of the repeat blocking arm and the adjusting screw should be equal within .005" when the seven code bar extensions are all in the marking position (left) and then shifted to the spacing position (right).

To Adjust—Position the code bar extension guide (left side only) with its mounting screws loosened and the repeat character delay mechanism plate mounting screw (left side only) loosened.

## REPEAT BLOCKING ARM DETENT SPRING TENSION

**Requirement**—Selector shaft in stop position.

Min. ¾ oz.—Max. 1¼ ozs. to start detent moving.

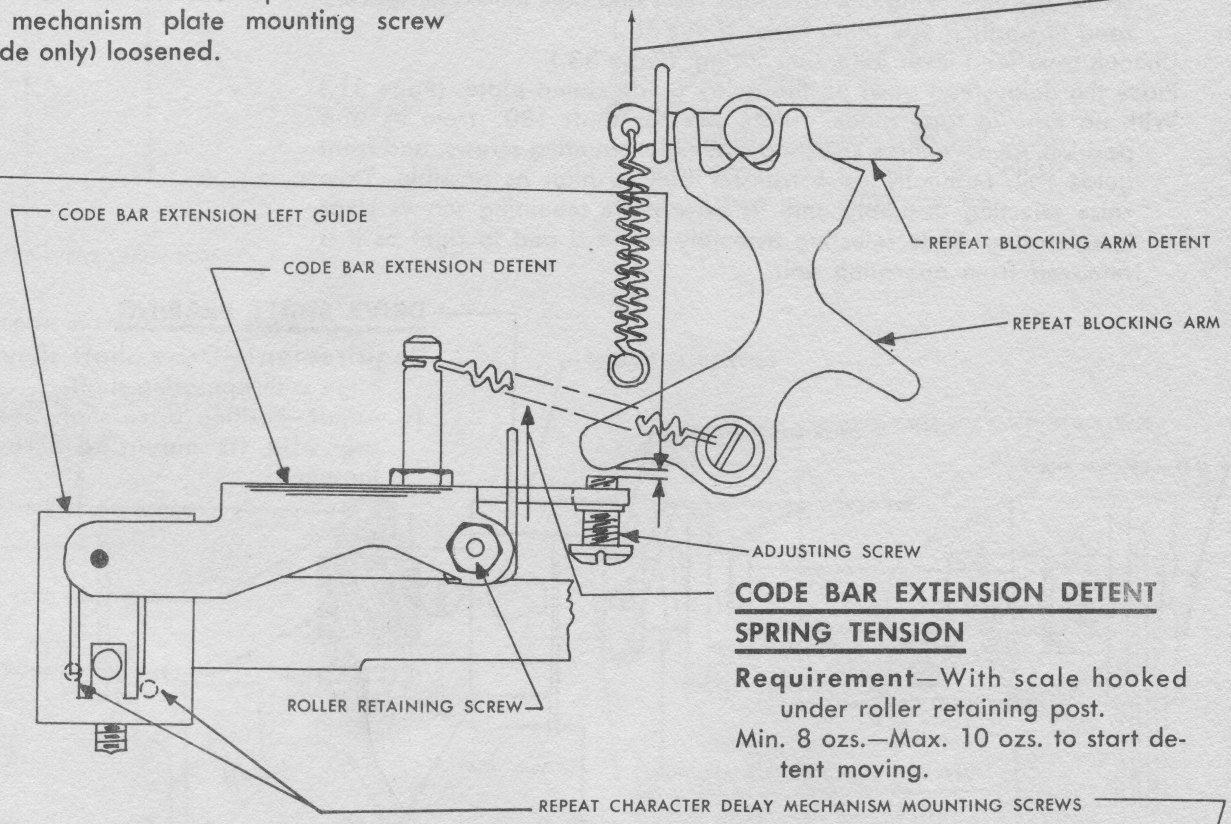


## CODE BAR EXTENSION DETENT SPRING TENSION

**Requirement**—With scale hooked under roller retaining post.

Min. 8 ozs.—Max. 10 ozs. to start detent moving.

## CODE BAR EXTENSION RETAINING PLATE

**Requirement**—With depressing bail roller on high part of its cam, move function blocking arm (Page 15) to the left until a distinct stop is felt. Minimum clearance without blinding between plate and each of seven extensions—check the entire travel.

To Adjust—Position plate with its mounting screws loosened.

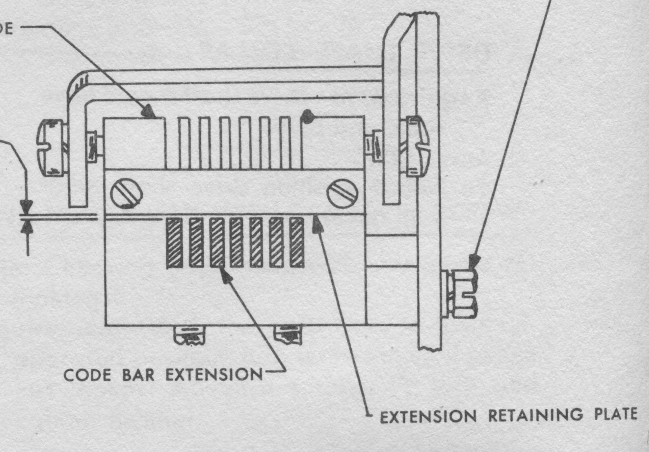

## BLOCKING CODE BAR EXTENSION

**Requirement**—Rotate pulley shaft until selector shaft is 180° (approximately) from stop position.

(1) Clearance between block bar extension operating arm and right shoulder of notch in block bar extension when play in extension is taken up to make this clearance a minimum:

Min. .030"—Max. .037"

To Check—Move repeat blocking arm to right under left extension of delay follower arm; hold block bar extension and function blocking arm to left.

(2) Projections on bottom of extensions should align with code levers. (Page 38). Code bar extensions should drop of their own weight when unit is held in vertical position.

NOTE—Function blocking arm, extension detent, and tape feed stop bail should be held away to free extensions.

(3) At least .010" clearance between latch blocking lever and selector cam.

To Adjust—Add or remove shims (#140455) between delay cam follower arm and upper extension of block bar operating arm to obtain .030" to .037" clearance.

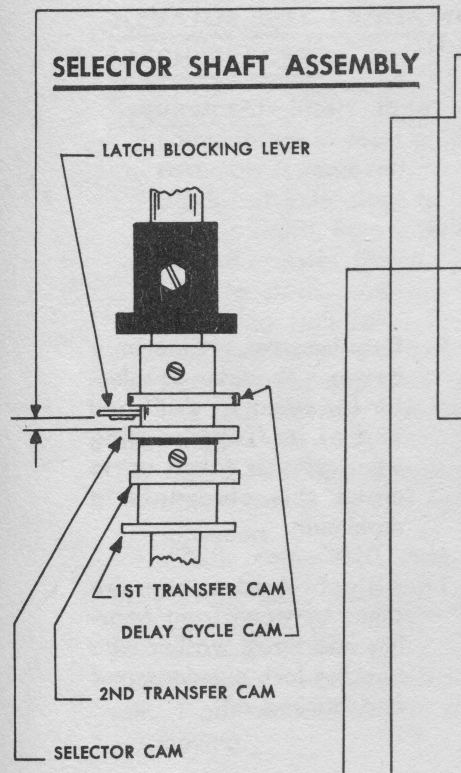


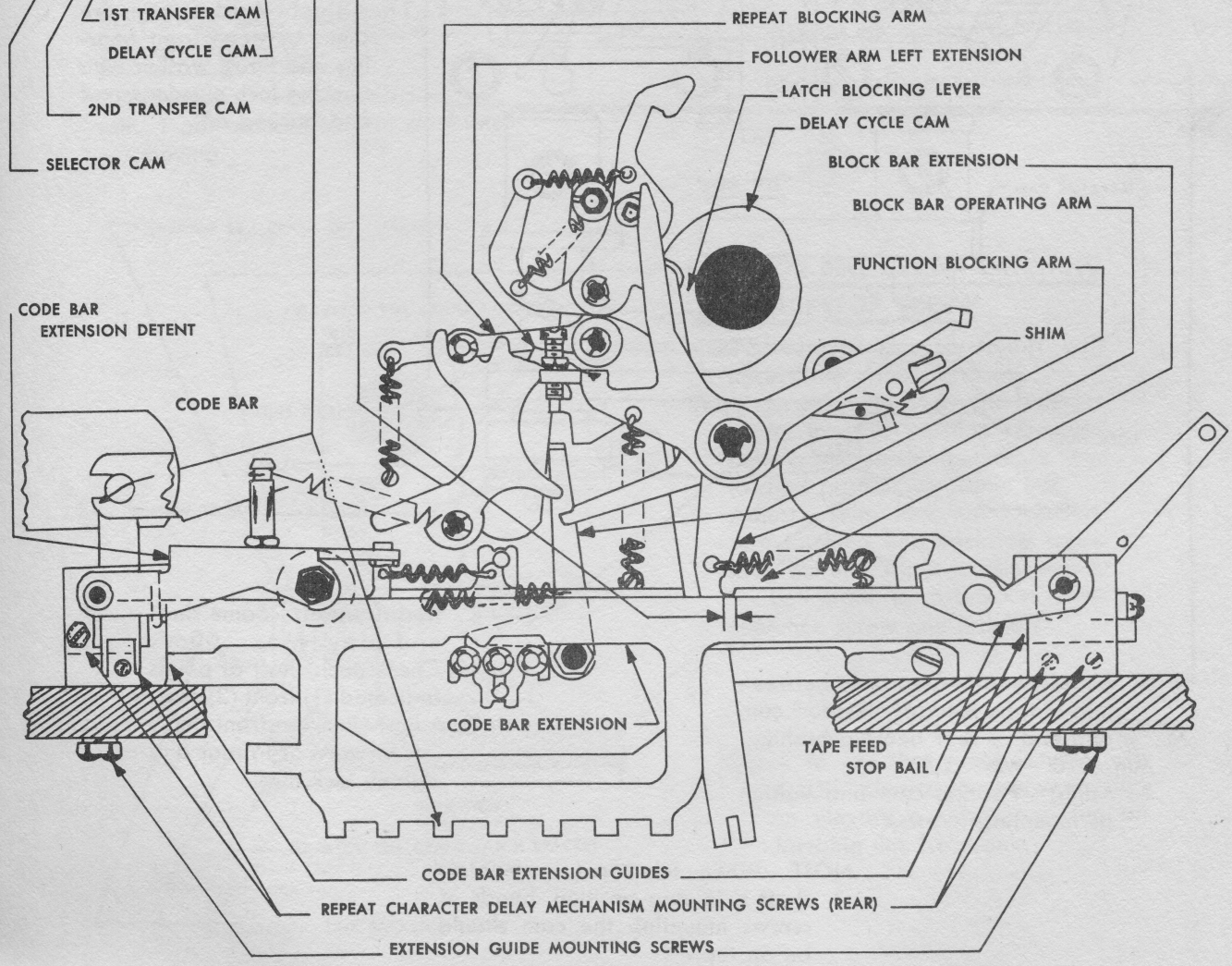

NOTE—Replace elevator shaft:
Insert shaft through rear bearing with clutch stop lug at top and throw-out lever, reset. Replace components removed (reverse order of Page 1).

## SELECTOR AND ELEVATOR SHAFT END PLAY

A. **Requirement**—Selector and elevator shafts should turn freely.
To Adjust—Align front and rear bearing brackets with their mounting screws loosened.

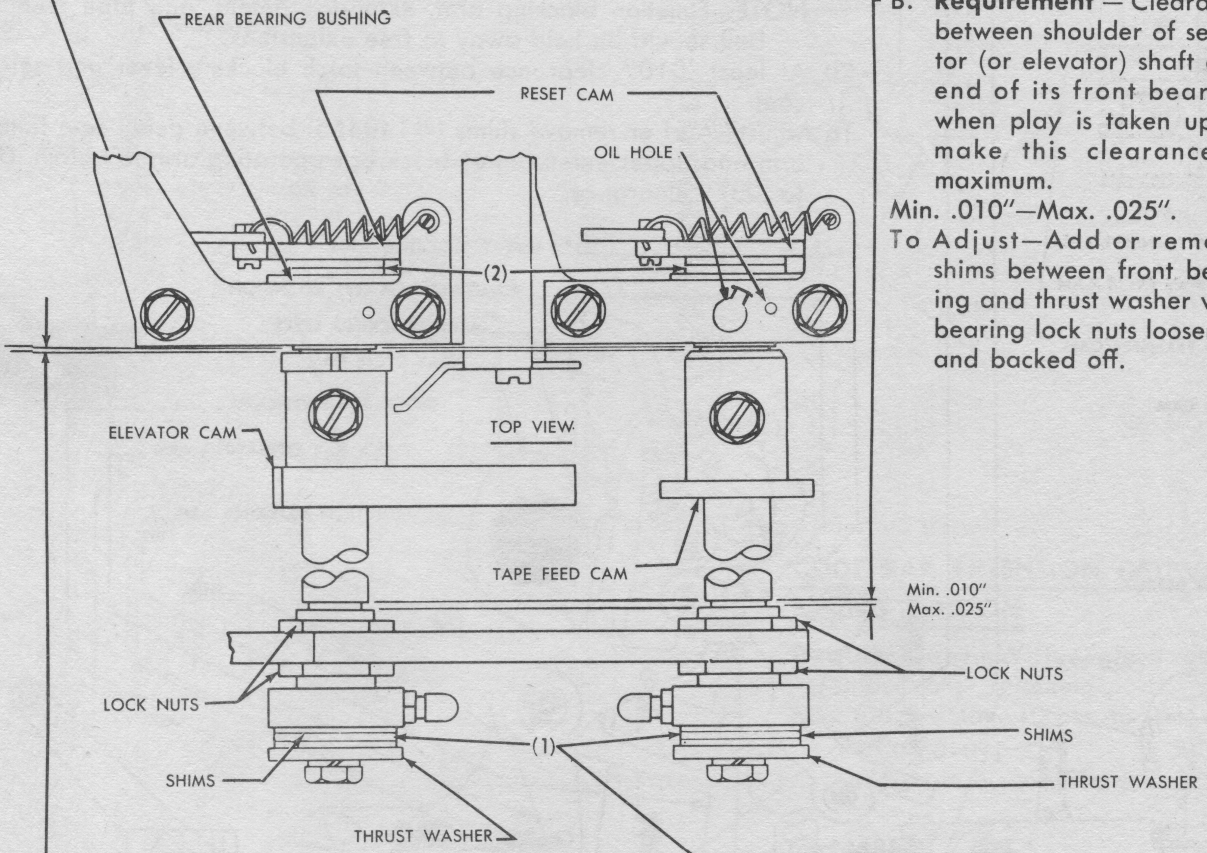


B. **Requirement** — Clearance between shoulder of selector (or elevator) shaft and end of its front bearing when play is taken up to make this clearance a maximum.
Min. .010"—Max. .025".
To Adjust—Add or remove shims between front bearing and thrust washer with bearing lock nuts loosened and backed off.

C. **Requirement**—Some shaft end play. Max. .006". Check each shaft at points indicated (1) front (2) rear.
To Adjust—Position front bearing forward or to rear and tighten lock nuts.

D. **Requirement**—Clearance between hub of tape feed (or elevator) cam and end of rear bearing bushing.
Min. .010"—Max. .030".
To Adjust—Position cam and tighten its mounting screws.

NOTE—When selector (or elevator) shaft is in stop position, heads of screws mounting the cam should be on top.

## ELEVATOR BELL CRANK LATCH BRACKET

**Requirement**—Insert tape with elevator combination in tape guide (if selector assembly is removed, move No. 2 and block bar extensions to left with other bars to right). Rotate pulley shaft until second transfer, (Page 22), moves code bars to stops; continue rotating until operating bail roller is on center of high dwell of cam, (Page 3). Clearance between elevator bell crank latching link and elevator bell crank latch:
Min. .010"—Max. .020"
To Adjust—Position elevator bell crank latch bracket with its mounting screws loosened.

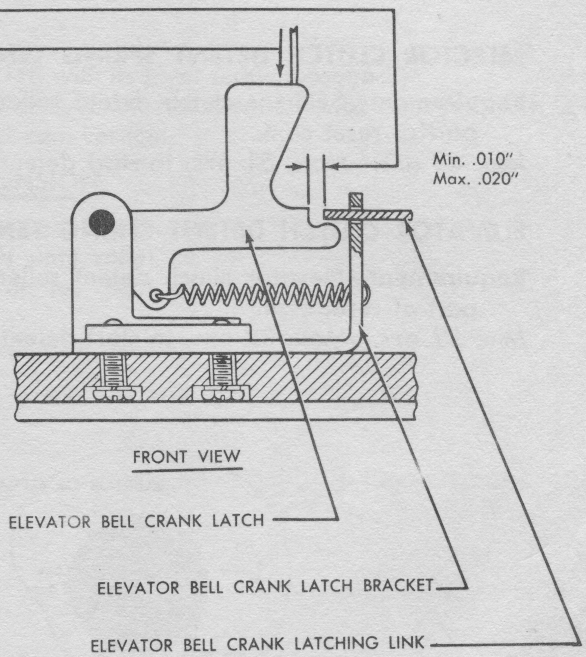


## ELEVATOR BELL CRANK LATCH SPRING TENSION

**Requirement**—Same as above.
Min. 1 oz.—Max. 3 ozs. to start latch moving.

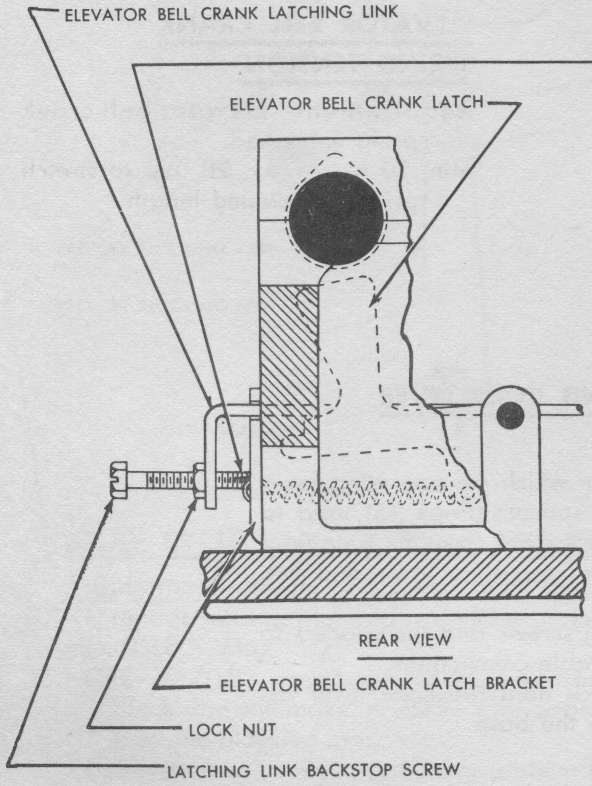


## ELEVATOR BELL CRANK LATCHING LINK BACKSTOP SCREW

NOTE—Checking adjustment will necessitate remaking it.
**Requirement**—Elevator and selector shafts in stop position. Elevator bell crank latching link in unlatched position—extreme left.
To Adjust—With lock nut loosened, turn latching link backstop screw in or out until it just touches elevator bell crank latch bracket. Then advance screw one half turn.

Check to see that there is .010" to .020" clearance between lug on elevate pushbar and lug on latching link bellcrank.

## SELECTOR CLUTCH DETENT SPRING TENSION

**Requirement**—Selector clutch detent roller on lowest part of reset cam.
Min. 43 ozs.—Max. 51 ozs. to start detent moving.

## ELEVATOR CLUTCH DETENT SPRING TENSION

**Requirement**—Elevator clutch detent roller on lowest part of reset cam.
Min. 22 ozs.—Max. 32 ozs. to start detent moving.

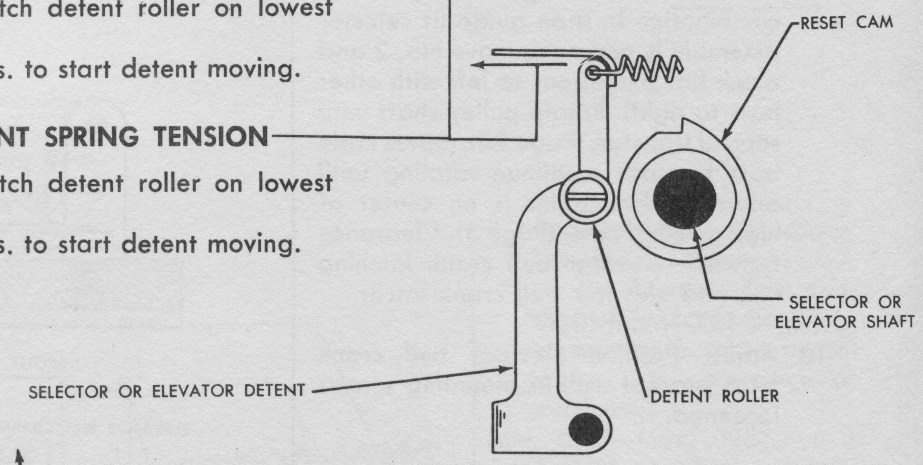


FRONT VIEW

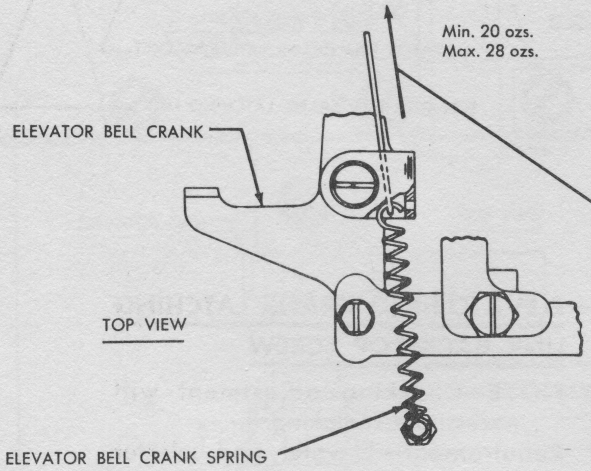


TOP VIEW

## ELEVATOR BELL CRANK SPRING TENSION

**Requirement**—Elevator bell crank spring unhooked.
Min. 20 ozs.—Max. 28 ozs. to stretch spring to installed length.

## INSTRUCTIONS FOR REMOVING CODE LEVER AND CONTACT ASSEMBLY

Remove the shoulder screw on which the operating lever pivots and retain all the spacers (Page 35) used to position the lever. Unhook the link from the tape feed stop bail and remove the operating lever and link assembly (Page 28).

Remove the contact mounting screws and the spacers to relieve the strain on the cable connections.

Remove the four screws which hold the code lever assembly mounting plate to the base.

## FUNCTION BLOCKING ARM POSITION

**Requirement**—Insert tape with repeat 4 or Y combination in tape guide and rotate pulley shaft until left edge of cam follower arm starts its downward travel past right edge of function blocking arm. Clearance between edge of each member:

Min. 0.020"—Max. 0.040"

To Adjust—Position function blocking arm to right or left with its pivot screw loosened.

NOTE—Remove contact assembly to facilitate adjustment. If selector assembly was removed, shift 0, 2, 4 code bars and the block bar to left with spreader cam vertical.

## DELAY CAM FOLLOWER ARM SPRING TENSION

**Requirement**—Insert tape with a repeat character combination in tape guide. Rotate pulley shaft until roller of delay cycle cam follower arm drops on low part of its cam.

Min. 17 ozs.—Max. 32 ozs. to start follower arm moving.

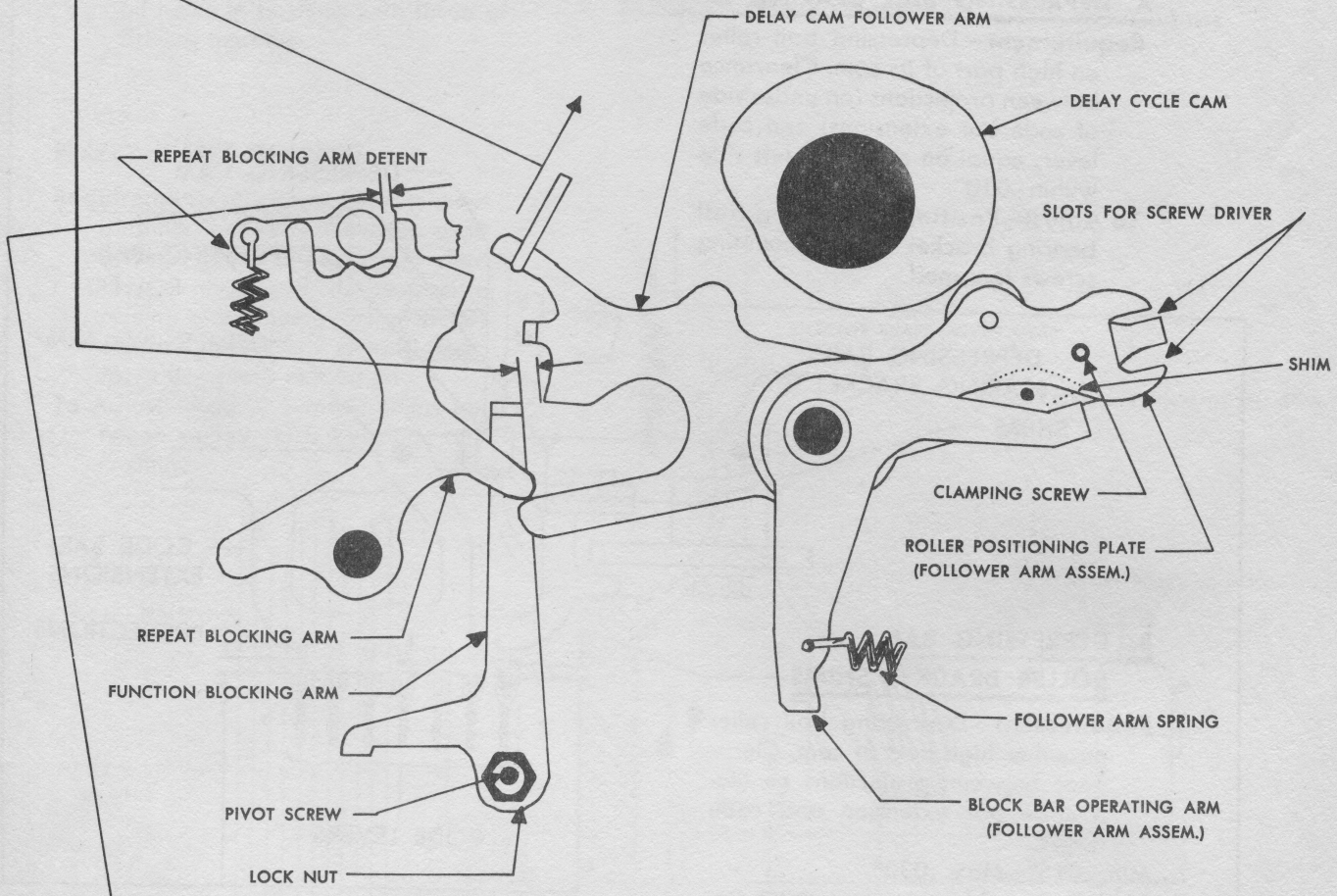


## DELAY CYCLE CAM FOLLOWER ARM ROLLER

**Requirement**—Rotate pulley shaft until follower arm roller is on high part of its cam. Clearance between repeat sensing blocking arm detent roller and right stop finger of repeat sensing blocking arm:

Min. .018"—Max. .025"

NOTE—A .018" wire gage should pass freely between the roller and block arm finger. Both roller and block arm will move. A .025" wire gage will cause the detent arm to lift a noticeable amount away from the blocking arm.

To Adjust—Move roller positioning plate with its clamping screw loosened. Insert screw driver in upper or lower slot at right end of arm and turn slowly.

## INSTRUCTIONS FOR REPLACING THE CODE LEVER AND CONTACT ASSEMBLY

Mount code lever and contact assembly guiding slot at end of latch blocking lever (Page11) into engagement with number 7 code lever and slot in depressing arm into engagement with its shoulder screw (Fig. below).

Insert tape with alternate 4 and Y code combination in tape guide. Hold tape feed stop bail (Page 25) down so as to engage delay feed pawl (Page 31) with slot in guide clamp, but not moved far enough to block lower tape feed blocking arm (Page 29). Rotate pulley shaft through at least two code selections. Projections on code levers should be aligned (approximately) with code bar extensions as viewed from right end.

To Adjust—Position code lever and contact assembly with its mounting screws loosened.

### A. DEPRESSING BAIL BEARING BRACKET

**Requirement**—Depressing bail roller on high part of its cam. Clearance between projections (on under side of code bar extensions) and code lever, equal on right and left side within .010".

To Adjust—Position depressing bail bearing bracket with its mounting screws loosened.

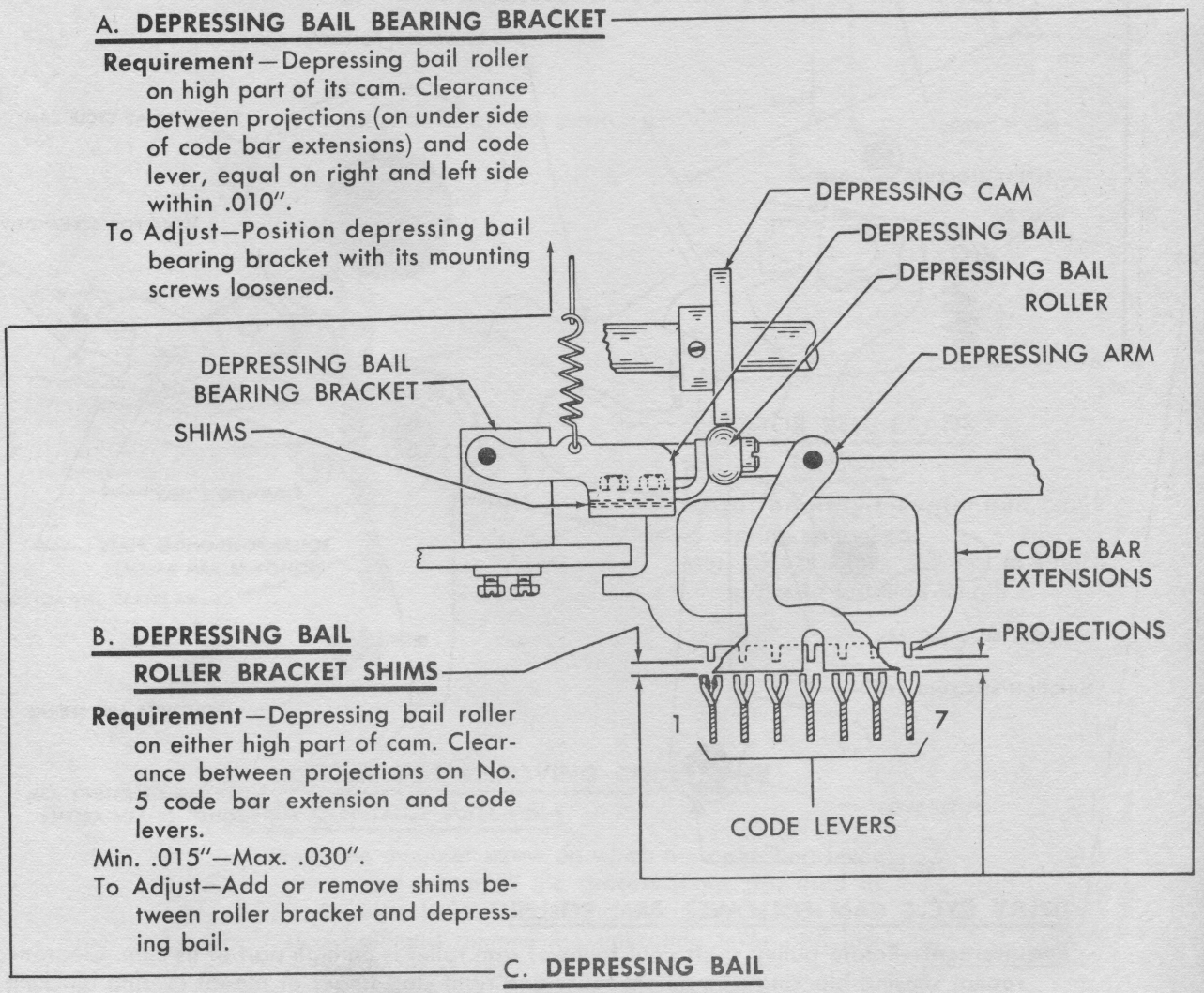


### B. DEPRESSING BAIL ROLLER BRACKET SHIMS

**Requirement**—Depressing bail roller on either high part of cam. Clearance between projections on No. 5 code bar extension and code levers.

Min. .015"—Max. .030".

To Adjust—Add or remove shims between roller bracket and depressing bail.

### C. DEPRESSING BAIL SPRING TENSION

Depressing bail roller on low part of its cam. Unhook spring at post.

Min. 32 ozs.—Max. 40 ozs. to stretch spring to installed length.

## SELECTOR AND ELEVATOR SHAFT CLUTCH

**Requirement**—Clearance between teeth of driving and driven member of both clutches.
Min. 0.020"—Max. 0.030"
To Check—Selector (or elevator) shaft fully disengaged and gear play taken up in direction for minimum clearance.
To Adjust—Add or remove shims between the driving clutch member and its respective bushing. Align oil holes in bushing with those of driving member.

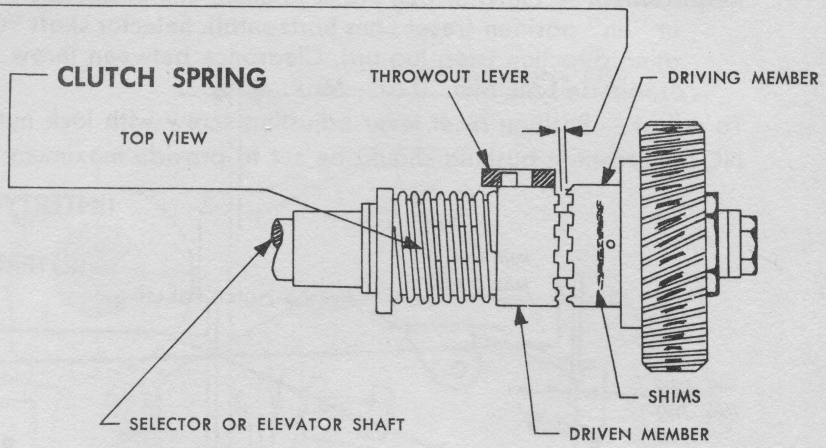


## PULLEY SHAFT BEARING

**Requirement**—Minimum play, without binding, between elevator shaft driven gear or selector shaft driven gear and its respective driving pinion (or gear) on pulley shaft. Check both driven gears for a complete revolution.
To Adjust—Add or remove shims between pulley shaft bearings and casting.

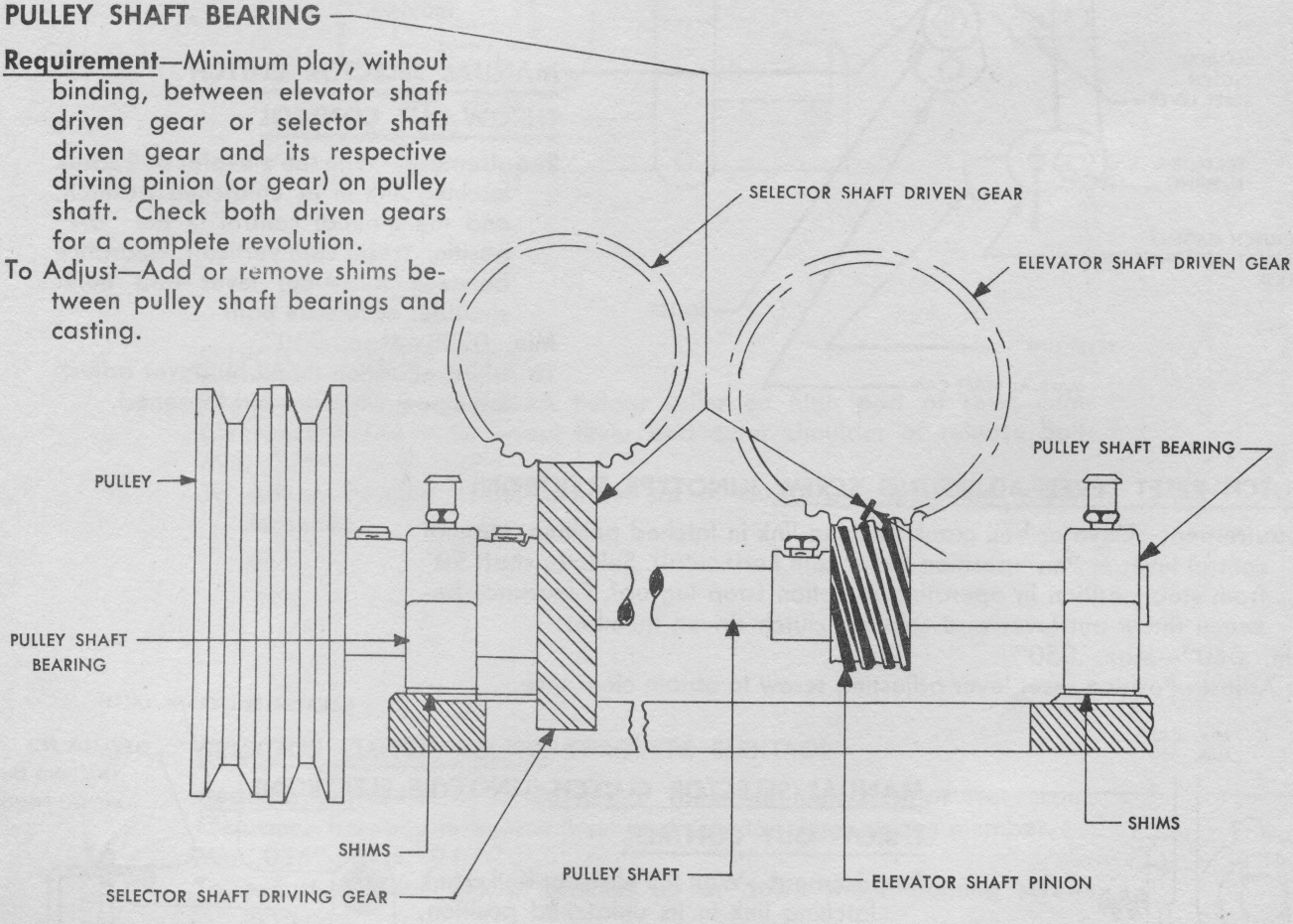


End play in pulley shaft:
Min. .002"—Max. .005"

## CLUTCH RESET LEVER ADJUSTING SCREW

**Requirement** — Elevator bell crank latching link in latched position. Manual control lever in "on" position (reset cam horizontal). Selector shaft 90° from stop position in operating direction (stop lug up). Clearance between throw out level and outer shoulder of release bail. Min. .020"—Max. .030".

To adjust — Position reset lever adjusting screw with lock nut loosened. Tighten lock nut.

NOTE: Eccentric bushing should be set to provide maximum travel of linkage.

**(INTERTYPE MONARCH — KEYBOARDLESS)**

**(INTERTYPE MONARCH — KEYBOARD)**

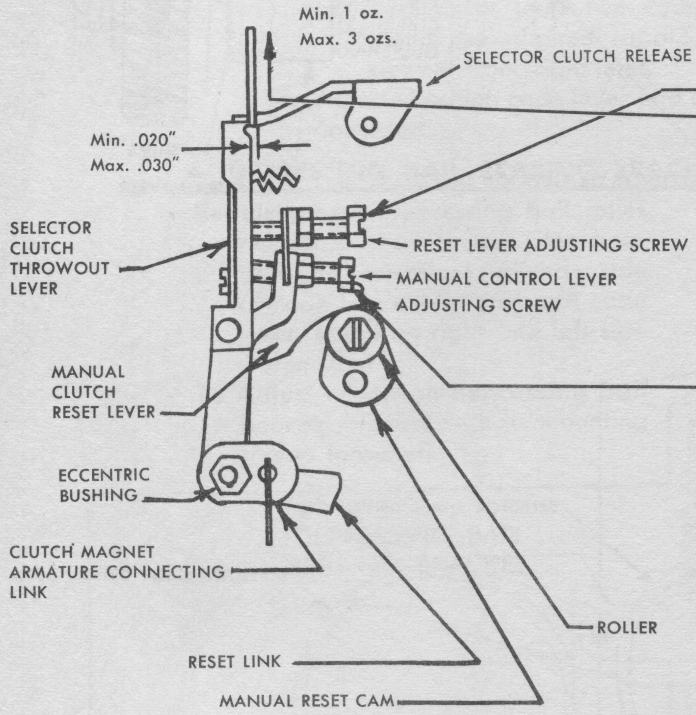


## SELECTOR CLUTCH RELEASE BAIL SPRING TENSION

**Requirement**—Manual control handle in "off" position. (Manual reset cam vertical).

Min. 3 oz.—Max. 4 ozs. to start latch moving.

## MANUAL SELECTOR CLUTCH THROW-OUT CONTROL

**Requirement**—With the elevator bell crank latching link in its unlatched position, and the manual control in the "off" position (reset cam vertical), clearance between throw-out lever and outer shoulder of release bail:

Min. .020"—Max. .030"

To Adjust—Position throw-out lever adjusting screw with lock nut loosened.

## CLUTCH RESET LEVER ADJUSTING SCREW (LINOTYPE ELEKTRON)

**Requirement**—Elevator bell crank latching link in latched position. Manual control lever in "on" position (reset cam horizontal). Selector shaft 90° from stop position in operating direction (stop lug up). Clearance between throw-out lever and selector clutch driven member.

Min. .040"—Max. .050"

To Adjust—Position reset lever adjusting screw to obtain clearance.

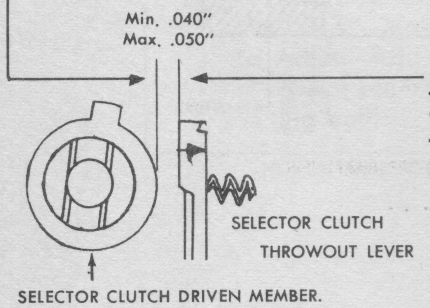


## MANUAL SELECTOR CLUTCH (LINOTYPE ELEKTRON) THROW-OUT CONTROL

**Requirement**—With the elevator bell crank latching link in its unlatched position, and the manual control in the "off" position (reset cam vertical), clearance between throw-out lever and selector clutch driven member.

Min. .040"—Max. .050"

To Adjust—Position throw-out lever adjusting screw with lock nut loosened.

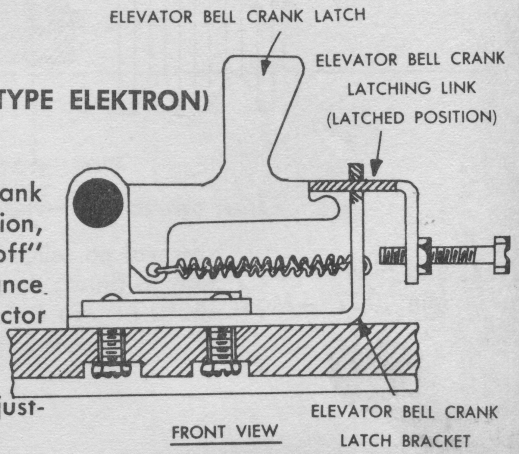

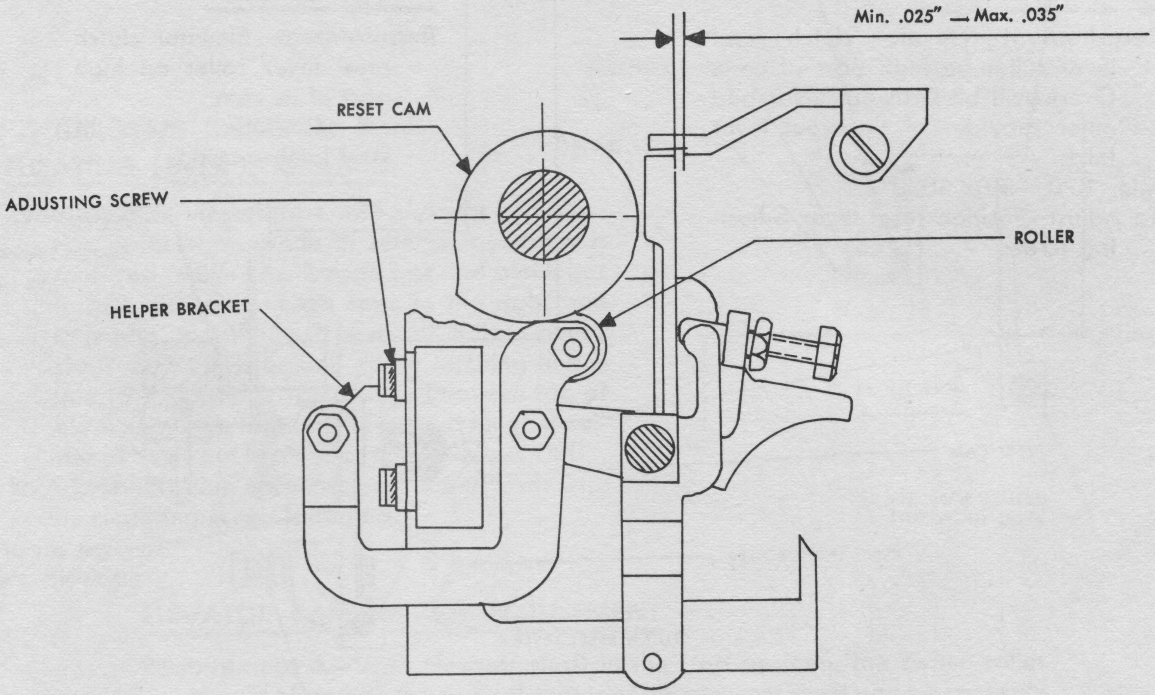


## SELECTOR CLUTCH HELPER

**Requirement**—Selector clutch helper roller on high part of reset cam. Clearance between throw-out lever and outer shoulder of release bail: Min. .025"—Max. .035"

To Adjust—Position helper bracket up or down with mounting screws loosened.

## SELECTOR CLUTCH HELPER (LINOTYPE ELEKTRON)

**Requirement**—Selector clutch helper roller on high part of reset cam. Clearance between throw-out lever and selector clutch driven member. Min. .035"—Max. .045"

To Adjust—Position helper bracket up or down with mounting screws loosened.

## ELEVATOR CLUTCH RESET LEVER ADJUSTING SCREW

**Requirement**—Elevator clutch reset lever roller on high part of cam. Overtravel of throwout lever and outer shoulder of throwout lever latch.

Min. .020"—Max. .030".

To Adjust—Position reset lever adjusting screw.

## ELEVATOR CLUTCH THROWOUT LEVER LATCH SPRING TENSION

**Requirement**—Elevator clutch reset lever roller on high part of its cam.

Min. 8 ozs.—Max. 12 ozs. to start latch moving.

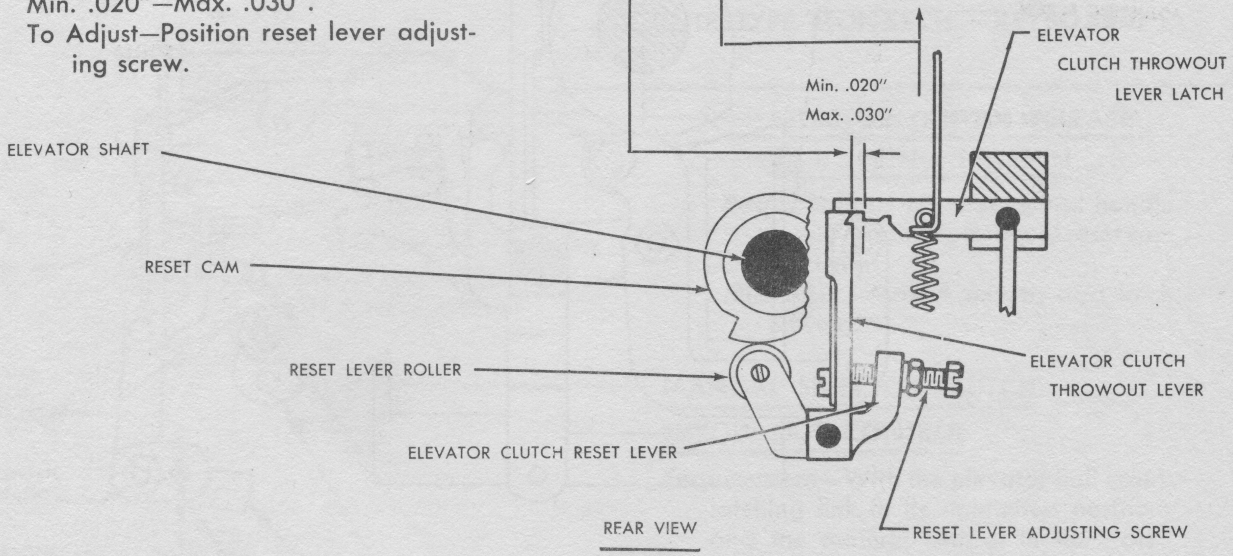


REAR VIEW

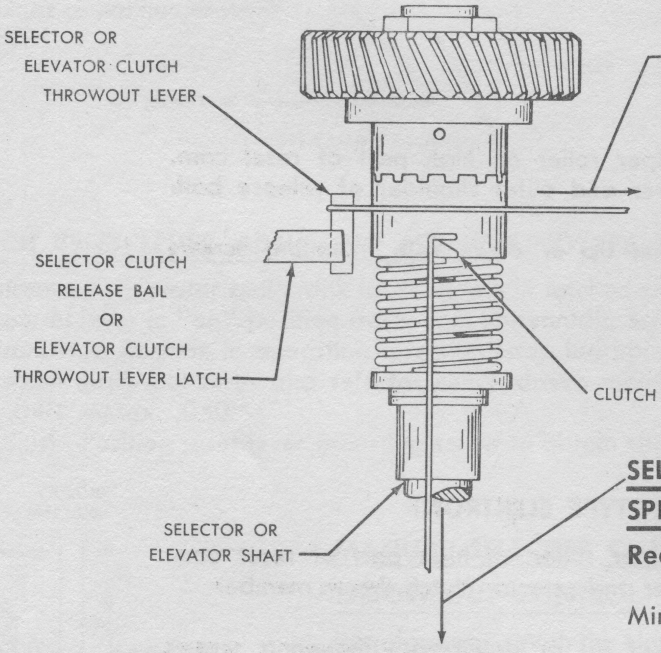


TOP VIEW

## SELECTOR AND ELEVATOR CLUTCH THROWOUT LEVER SPRING TENSION

**Requirement**—Rotate selector and elevator shafts so that stop lug on driven clutch members are on top. Relatch throwout lever.

Min. 1½ lbs.—Max. 2½ lbs. to start lever moving.

## SELECTOR AND ELEVATOR CLUTCH SPRING TENSION

**Requirement**—Clutch teeth fully engaged and clutch stop lug at top.

Min. 2½ lbs.—Max. 5 lbs. to just separate clutch teeth.

To Check—Determine point of minimum tension by disengaging clutch, rotating driving gear a few degrees and repeating test. Replace spring if weak.

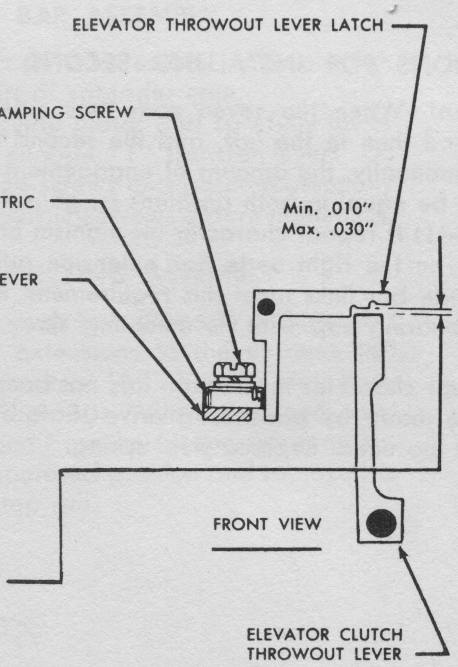


## (LINOTYPE ELEKTRON)
## FLOATING LEVER ECCENTRIC

**Requirements**—Insert tape with elevator combination in the tape guide (if selector assembly is removed, move No. 2 code bar and block bar to left with other code bars to the right and spreader cam (Page 2) vertical). Rotate pulley shaft until elevator bell crank latching link is in latched position. Clearance between top of elevator clutch throwout lever and inner shoulder of throwout latch Min. .010"—Max. .030".

To Adjust—Position eccentric on floating lever with its clamping screw loosened.

## ELEVATOR CAM SWITCH ADJUSTMENT

**Requirement A**—With elevator shaft in the stop position, the switch roller should align with the vertical center of the elevator shaft and be centrally located on the cam.

To Adjust—Loosen contact bracket mounting screws and position. Tighten screws.

**Requirement B**—With elevator shaft in the stop position, leading edge of crest of elevator delivery cam should be 5° before the vertical center line of the elevator shaft.

To Adjust—Loosen shaft oiler and rotate cam. Tighten oiler.

**(LINOTYPE ELEKTRON)**

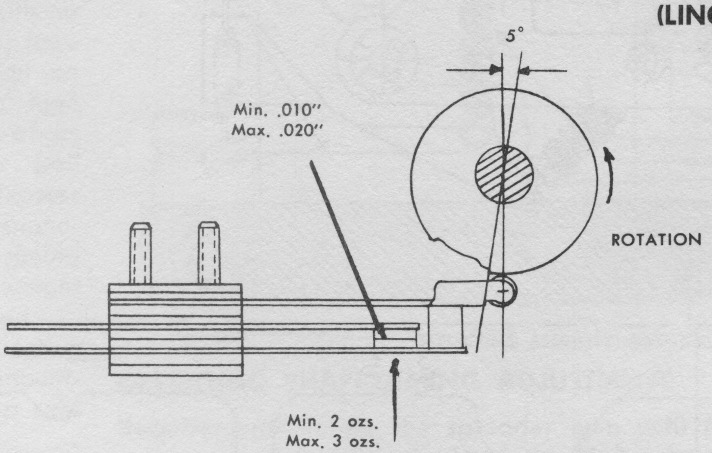


## CONTACT GAP

**Requirements**—Switch roller on high part of cam. Min. .010" Max. .020".

To Adjust—Bend upper fixed contact.

**Requirement**—With switch roller on low part of cam, Min. 2 oz — Max. 3 oz to open contacts.

To Adjust—Bend contact spring at its mounting.

## INSTRUCTIONS FOR INSTALLING SECOND TRANSFER MECHANISM

**Requirement**—When the seven code bar extensions are moved to the right and then to the left, and the second transfer bracket is moved down manually, the amount of engagement of the "T" transfer levers should be equal in both positions as gaged by eye.

To Adjust—(1) If repeat character mechanism has been moved, loosen the screws on the right code bar extension guide and position guide so that code bar links meet this requirement. Refine by positioning drive shaft bearing cap with its mounting screws loosened. Replace yield spring.

(2) If repeat character mechanism has not been removed, the adjustment can be made by positioning drive shaft bearing cap with mounting screws loosened. Replace yield spring.

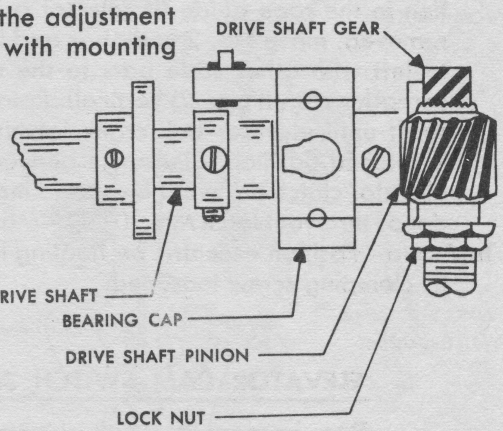


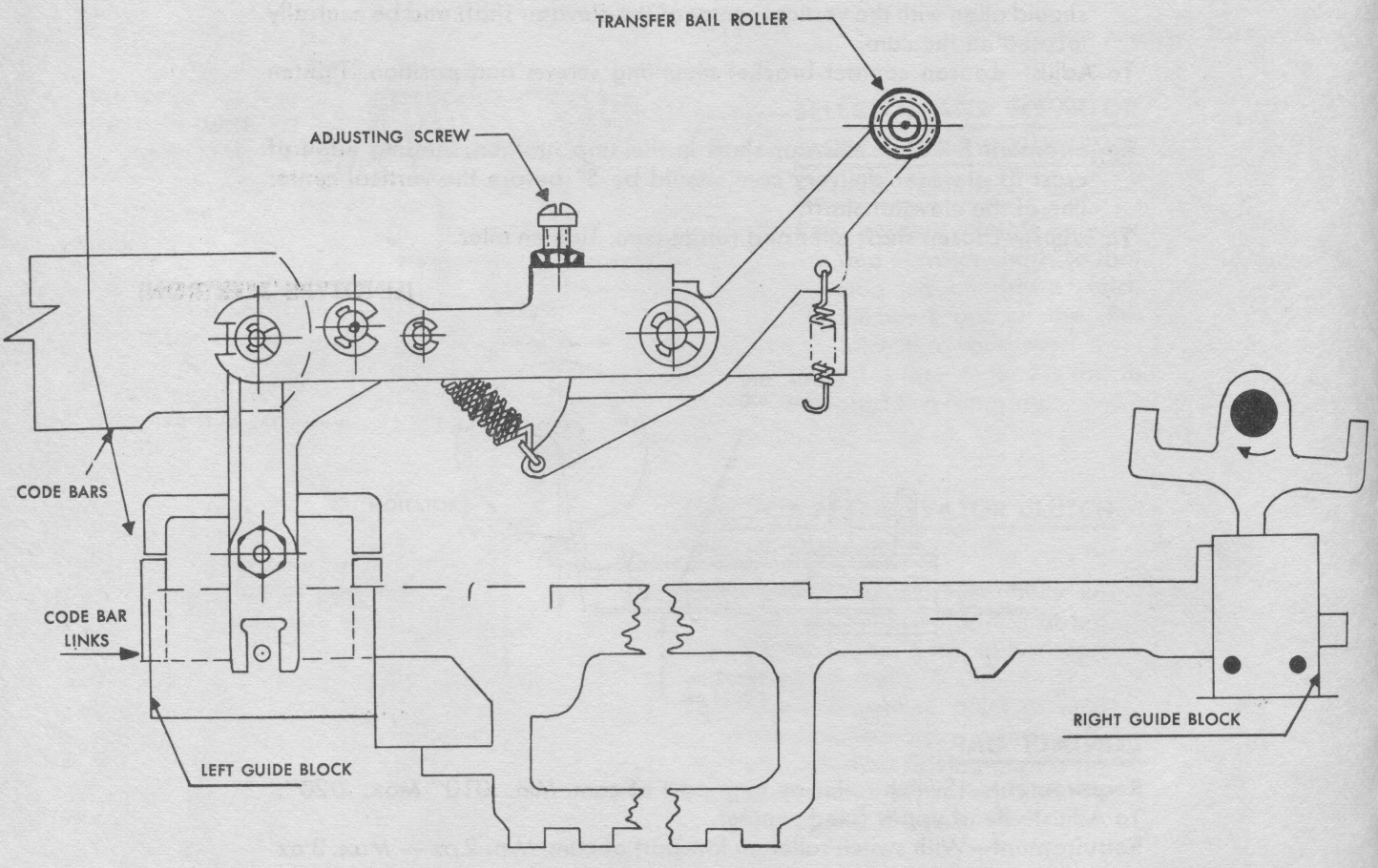

## INSTRUCTIONS FOR MOUNTING PUSH BAR ASSEMBLY

**Requirement**—Code bar links to left. Second transfer bail roller on high part of its cam. Push bars on high part of spreader cam.
Slide code bars into their respective guide plates and carefully lower assembly until notches on code bars engage "T" transfer levers. Do not force assembly. Insert four mounting screws and position assembly against eccentric stop and bell crank adjusting screws before tightening.

## INSTRUCTIONS FOR REPLACING THE SELECTING ASSEMBLY

With depressing bail roller (Page 16) and push bars (Page 7) on high part of respective cams, move code bar extensions to the extreme left position. Rotate selector shaft approximately 180° from its stop position, and latch tape feed stop bail (Page 30). With delay feed pawl and retaining pawl (Page 32) disengaged from their respective ratchets, manually hold the transfer bail in its operated position and replace the selecting assembly. Mount the front stop rail.

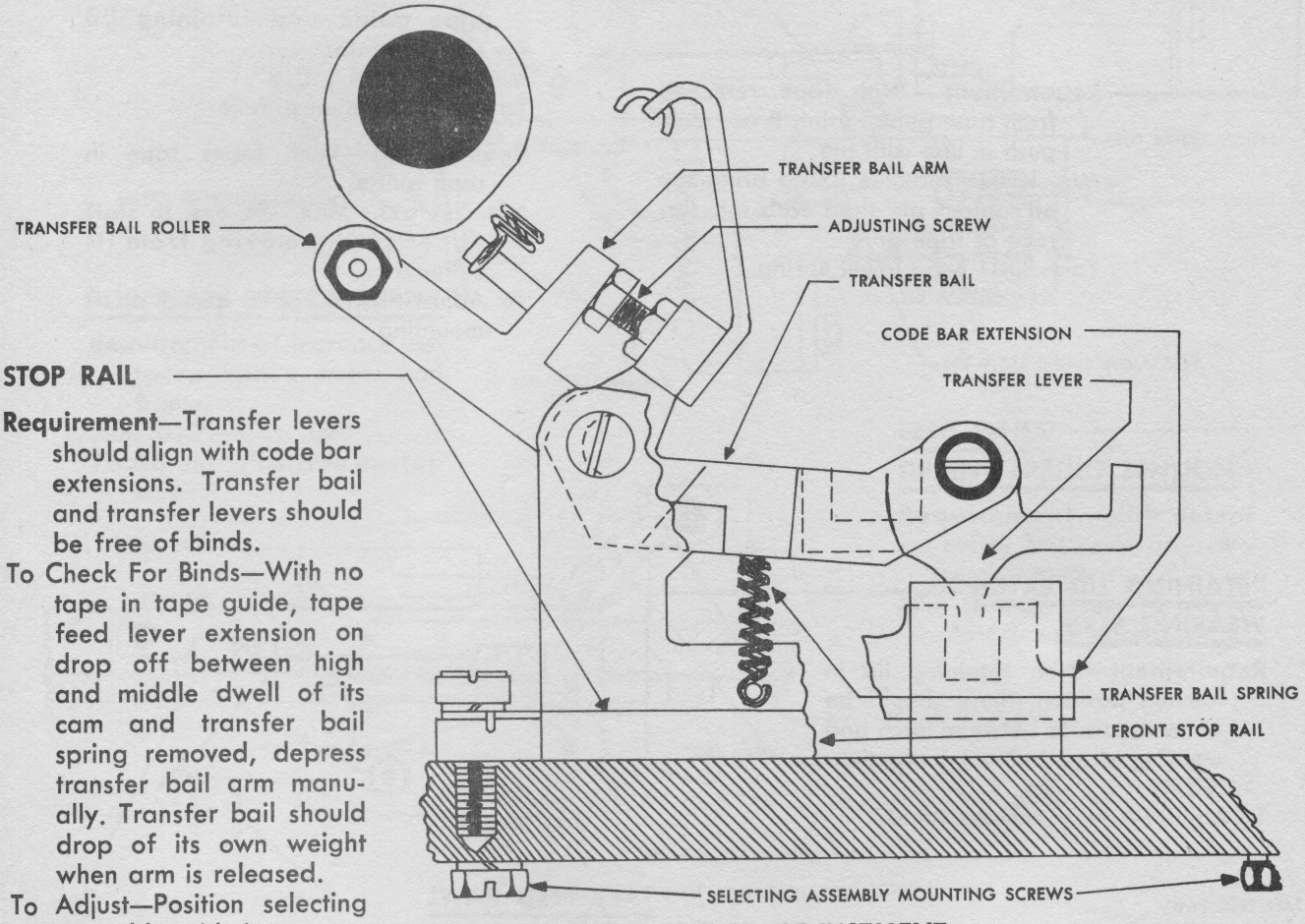


## STOP RAIL

**Requirement**—Transfer levers should align with code bar extensions. Transfer bail and transfer levers should be free of binds.

To Check For Binds—With no tape in tape guide, tape feed lever extension on drop off between high and middle dwell of its cam and transfer bail spring removed, depress transfer bail arm manually. Transfer bail should drop of its own weight when arm is released.

To Adjust—Position selecting assembly with its mounting screws and stop rails loosened.

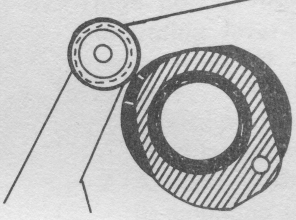

## OPERATING SHAFT TIMING ADJUSTMENT

**Requirement**—Rotate the spreader cam until the operating bail rollers are on the timing mark on the high part of their cam. The second transfer bail roller should be on the first timing mark from stop position on the front of the cam.

To Adjust—Loosen the drive shaft pinion lock nuts, position the spreader cam and the pinion, then tighten the lock nuts. Recheck the adjustment after tightening the lock nuts.

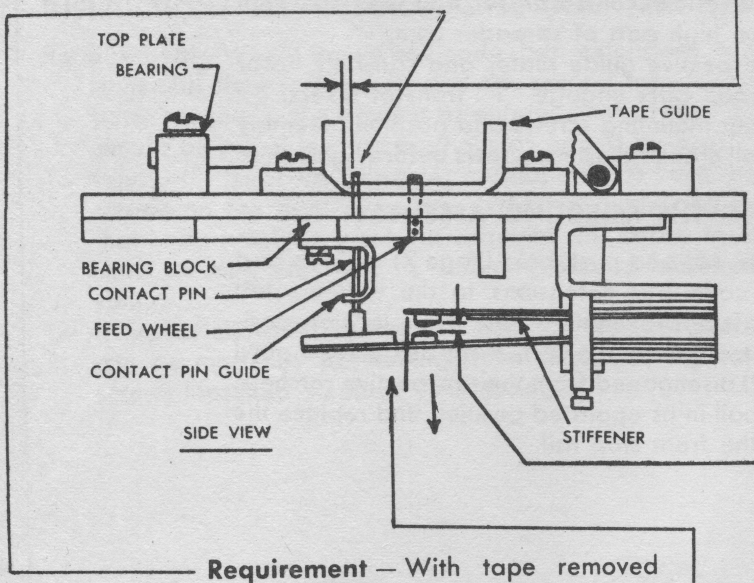


## CONTACT PIN GUIDE

**Requirement**—Clearance between tape-out contact push pin and shoulder of guide plate when side play is taken up to make clearance minimum.
Min. .050"—Max. .060".
With feed wheel detent held away, feed wheel should turn freely and have some end play.
Max. .002".
To Adjust—Position contact pin guide and bearing block with mounting screws loosened.

## TAPE-OUT CONTACT

**Requirement**—With blank tape in tape guide and retaining lid closed, contact gap.
Min. .008"—Max. .012".
To Adjust—Position stiffener.

**Requirement**—With tape removed from tape guide, using 8 oz. scale push in line with pin.
Min. ¼ oz.—Max. ½ oz. to bring top of contact pin flush with top surface of tape guide.
To Adjust—Bend lower spring.

**Requirement**—With blank tape in tape guide.
Min. 1½ ozs.—Max. 2½ ozs. to start upper spring moving from its stiffener.
To Adjust—Bend upper spring at its mounting.

## RETAINING LID LATCH WEARING STRIP

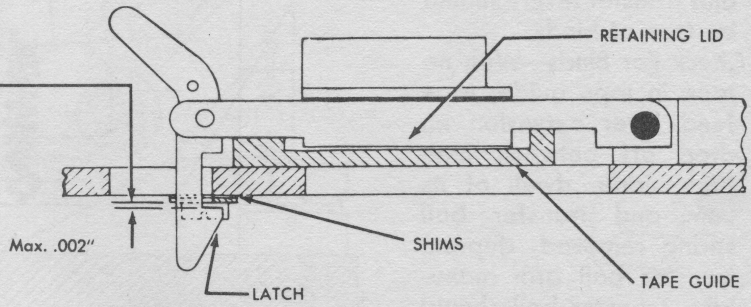


**Requirement**—With retaining lid in latched position, there should be some clearance between latch and wearing strip, but not more than .002".
To Adjust—Add or remove shims.

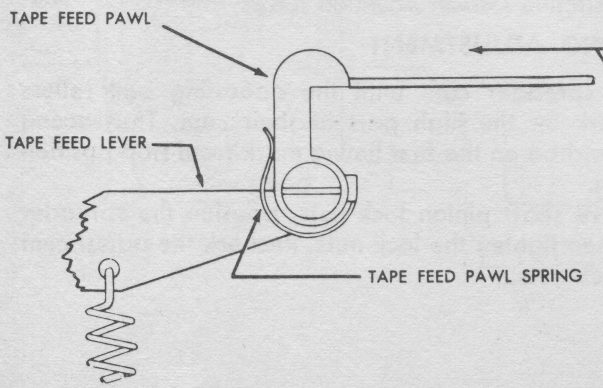


## TAPE FEED PAWL SPRING TENSION

**Requirement**—Push end of 8 oz. scale applied to right edge of tape feed pawl.
Min. 2 ozs.—Max. 3 ozs. to move feed pawl to vertical position.
To Adjust—Turn spring right or left with bearing screw loosened.

NOTE—In replacing top plate, guide feed pawl into position, rehook two top plate springs and replace bearings.

## INSTRUCTIONS FOR REPLACING TAPE FEED STOP BAIL OPERATING LEVER AND LINK

Hook link to stop bail lug.
Mount operating lever to its bracket with shoulder screw, spacers and nut (Page 38).

## TOP PLATE SPRING TENSION

**Requirement**—Hook a 32 oz. scale under end of tape guide.
Min. 8 ozs.—Max. 20 ozs. to start top plate moving.

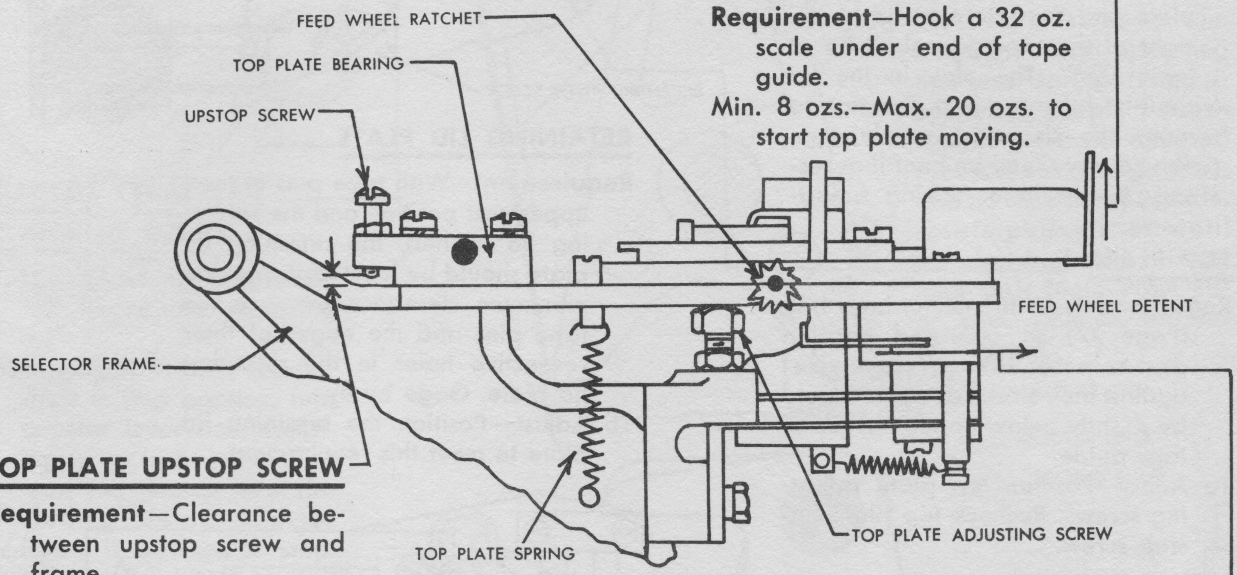


## TOP PLATE UPSTOP SCREW

**Requirement**—Clearance between upstop screw and frame.
Min. .010"—Max. .020".
To Adjust—Position upstop screw.

## FEED WHEEL DETENT SPRING TENSION

**Requirement**—With detent roller between any two ratchet teeth.
Min. 12 ozs.—Max. 15 ozs. to start detent moving.

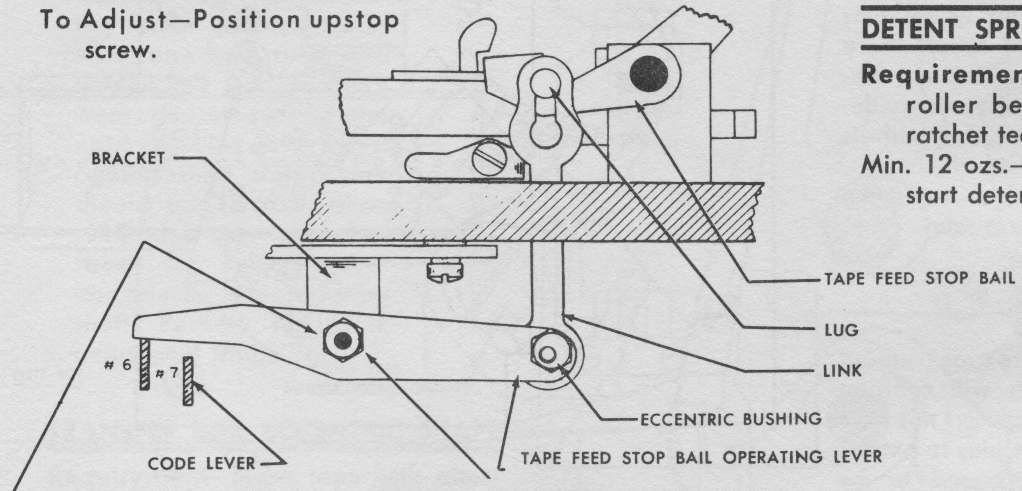


## TAPE FEED STOP BAIL OPERATING LEVER

**Requirement**—With tape feed lever extension (Page 33) on high part of its cam and tape feed stop bail latched, operating lever should move without binding over its entire travel.
To Adjust—

1. Lateral position—add or remove spacers between operating lever and shoulder screw (Page 38).
2. Angular position—shift operating lever bracket with its mounting screws loosened.

## TAPE SPACE ADJUSTMENT

**Requirement**—Remove or add shims between the tape retaining lid and the retaining lid plate so that the space between the tape guide plate and the tape retaining lid plate is from .006" to .008" when measured at the left edge of the retaining lid plate as viewed when facing operating unit. The clearance between the tape guide plate and the retaining lid to the right of the tape pins shall be at least .006". The play in the lid shall be taken up in a direction to make the clearance a minimum. The lid plate may be bent if necessary to facilitate making adjustments.

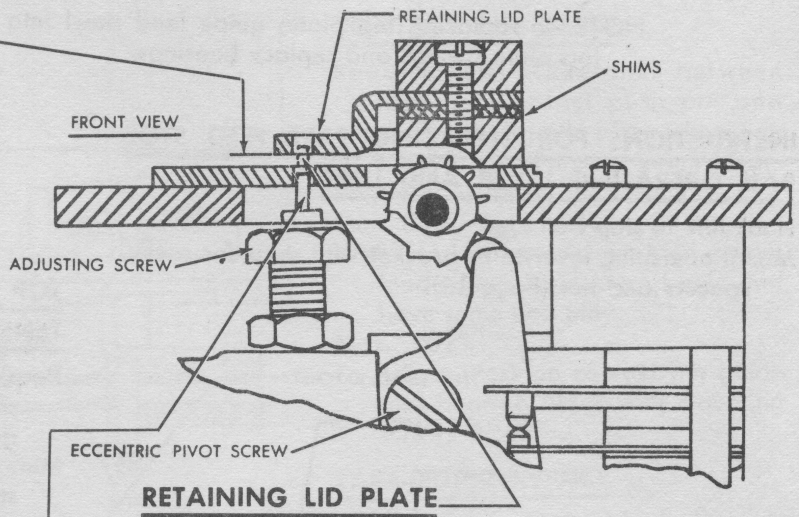


## TOP PLATE

**Requirement**—With selector lever bail (Page 27) in operated position and selector levers (clockwise) against their stop. Tape pins should be slightly below upper surface of tape guide.

To Adjust—Position top plate adjusting screws. Recheck top plate upstop screw.

## RETAINING LID PLATE

**Requirement**—With tape pins in their uppermost position and the retaining lid latched, the retaining lid plate should be located to provide maximum clearance between the tape pins and the edges of their respective holes in the retaining lid plate. Gage by eye.

To Adjust—Position the retaining lid plate to meet this requirement.

## TAPE GUIDE

**Requirement**—With feed wheel pins engaging tape feed holes, there should be equal clearance between each side of tape and guide.

To Adjust—Position tape guide with its mounting screw loosened.

NOTE—Tape pins should not strike sides of slot in tape guide.

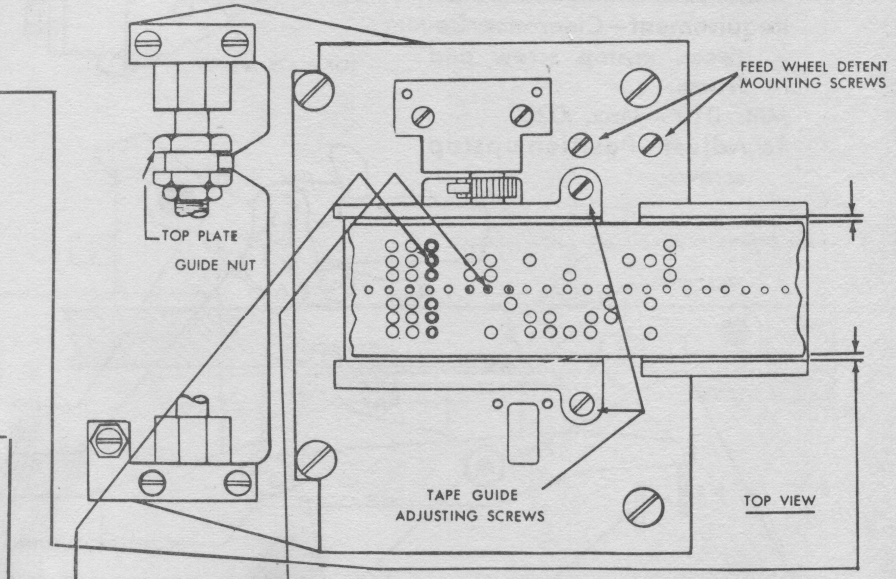


## FEED WHEEL DETENT

**Requirement**—Perforate tape (rub-out combination) which will conform to gauge No. 2215. Insert this tape in tape guide. Tape pins to extend through tape holes and to be centrally located (laterally).

To Adjust—Position feed wheel detent bracket with its mounting screws loosened. (Old Style).

To Adjust—Position feed wheel detent bracket with its mounting screws located to the right in elongated holes. Obtain full seating of detent roller by rotating eccentric pivot screw. (New Style).

## TOP PLATE GUIDE NUT

**Requirement**—Tape pins centrally located (front to rear) with holes in tape.

To Adjust—Position top plate guide nut.

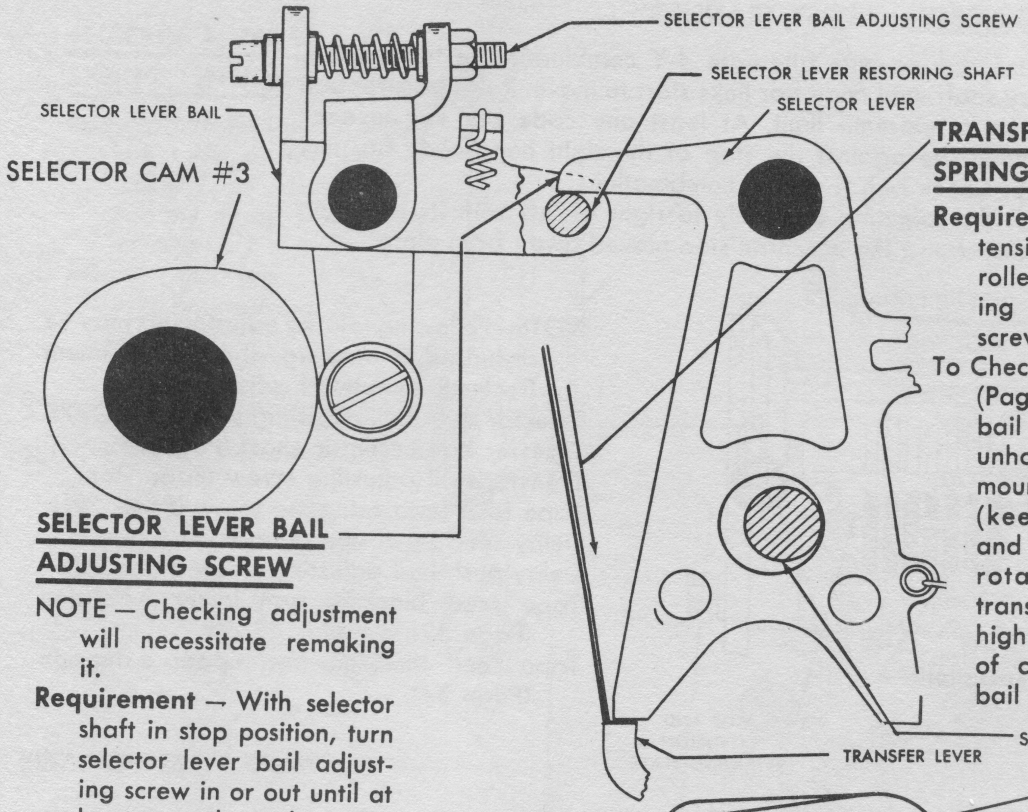


## TRANSFER BAIL YIELD SPRING TENSION

**Requirement**—At least 6 ½ lb. tension to start transfer bail roller arm (Page 26) moving away from adjusting screw.

To Check—With spreader cam (Page 2) vertical, operating bail lever springs (Page 3) unhooked, coupling sleeve mounting screw removed (keep sleeve engaged), and no tape in tape guide, rotate pulley shaft until transfer bail roller is on high part (note Page 28) of cam. Unhook transfer bail spring.

## SELECTOR LEVER BAIL ADJUSTING SCREW

NOTE — Checking adjustment will necessitate remaking it.

**Requirement** — With selector shaft in stop position, turn selector lever bail adjusting screw in or out until at least one selector lever (including delay selector lever) is against its stop. Screw head bears against washer. Then turn adjusting screw counter-clockwise one-half turn and tighten lock nut. (To check wear) depress sensing pins until selector levers rest against their stop. There should not be more than .010 inch clearance between any selector lever and selector lever restoring shaft. Recheck top plate adjustment (Page 26).

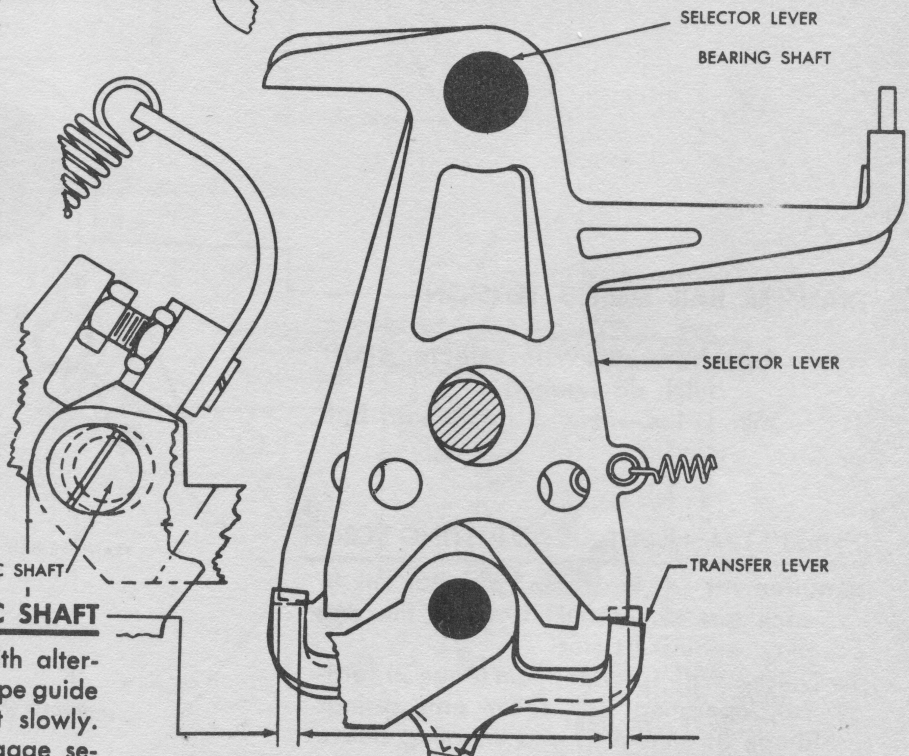


## TRANSFER BAIL ECCENTRIC SHAFT

**Requirement**—Insert tape with alternate 4-Y combination in tape guide and rotate selector shaft slowly. When transfer levers engage selector lever, the amount of bite of selector lever on transfer lever should be same on both right and left. (High part of eccentric up).

Check both 4 and Y combination.

To Adjust—Position transfer bail eccentric shaft with its lock nut loosened.

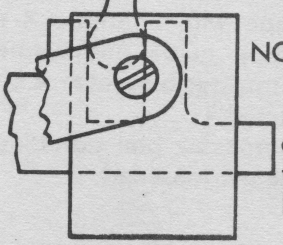

NOTE: With selector shaft in stop position, there should be at least .020" clearance between selector levers and transfer levers.

## SELECTING ASSEMBLY — "FIRST TRANSFER"

**Requirement**—Insert tape with alternate 4-Y combination in tape guide, rotate pulley shaft until code bar links start to move. Raise transfer bail (manually) to its extreme limit. At least one code bar link in each direction should be against the stop of the right hand code bar link guide block. Check boh 4 and Y combinations.

To Adjust—Shift the selecting assembly to right or left with its mounting screws loosened and the eccentric stop moved away from plate.

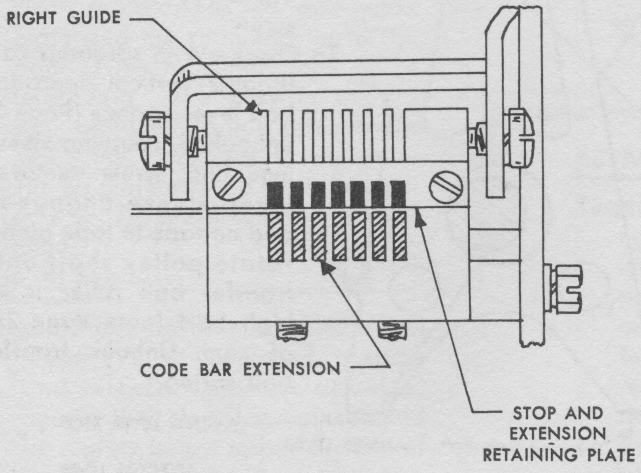


NOTE—Following related adjustments may be disturbed in making above adjustment (recheck completed adjustments).

Selector lever bail adjusting screw (Page 27).
Transfer bail eccentric shaft (Page 28).
Transfer bail adjusting screw (Page 28).
Tape feed lever adjusting screw (Page 29).
Delay feed pawl operating lever (Page 32).
Delay push bail adjusting screw (Page 32).
Tape feed blocking arm lower extension (Page 33).
Tape feed blocking arm upper extension (Page 34).

## TRANSFER BAIL SPRING TENSION

**Requirement**—With selector shaft clutch disengaged.

Min. 3 lbs.—Max. 5 lbs to start bail moving.

## "FIRST" TRANSFER BAIL ADJUSTING SCREW

**Requirement**—At least one code bar link in each direction should be held (no end play) against its stop.

To Check—With spreader cam (Page 2) vertical, operating bail roller arm springs (Page 3) unhooked and coupling sleeve mounting screw removed (keep sleeve engaged), insert tape with alternate 4-Y combination in tape guide and rotate pulley shaft until transfer bail roller is on high part of its cam #1.

To Adjust — Position transfer bail adjusting screw with its lock nut loosened.

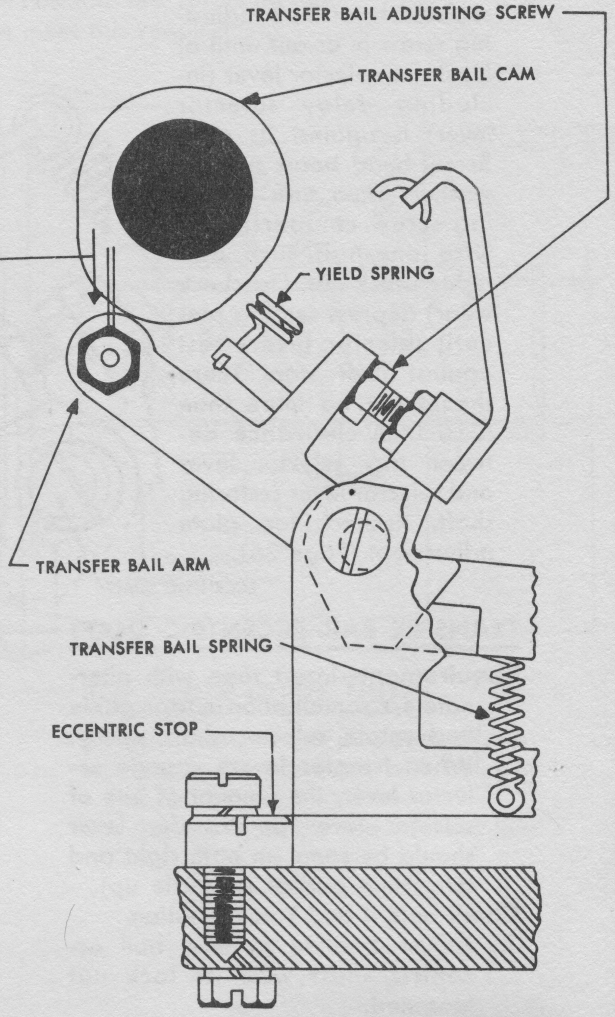

## SELECTOR LEVER BAIL YIELD SPRING TENSION

**Requirements**—Selector levers bail roller on low part of cam #3.
Selector lever bail spring unhooked.
Min. 5½ lbs. Max. 8 lbs. to start bail moving. Replace spring.

## SELECTOR LEVER BAIL SPRING TENSION

**Requirements**—Selector lever bail roller on low part of cam #3.
Tape pins held down.
Min. 3½ lbs.—Max. 4 lbs. to start bail moving.

## SELECTOR LEVER SPRING TENSION

**Requirements**—Selector lever bail roller and transfer bail roller (Page 28) on low part of their respective cam #3 and #1.
Selector lever bail held down to fully compress yield spring.
Min. 2¼ ozs. Max. 3¼ ozs. to start selector lever moving.

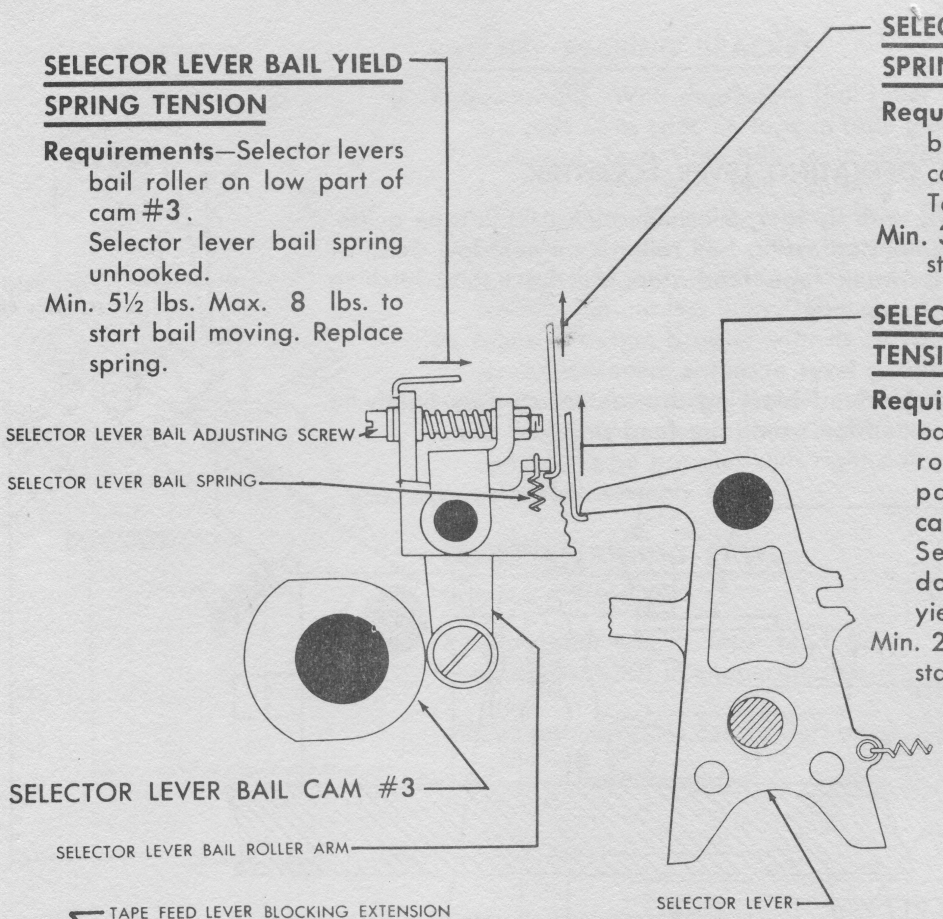


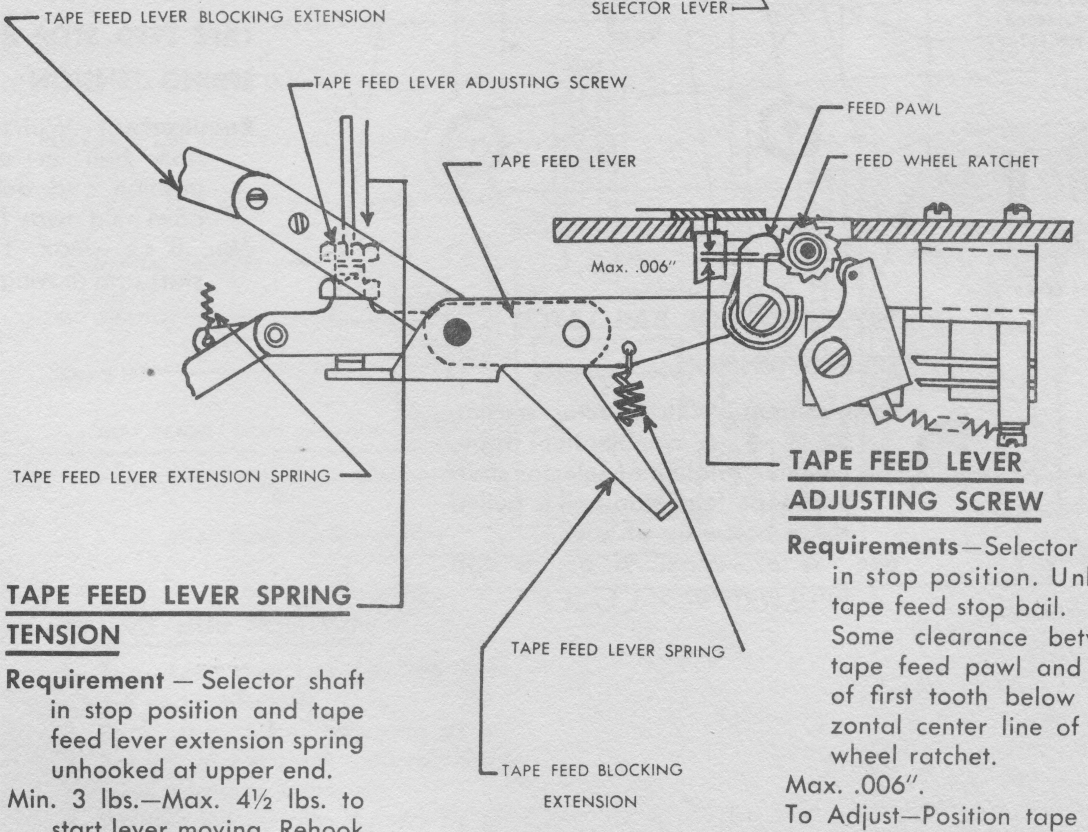


## TAPE FEED LEVER SPRING TENSION

**Requirement** — Selector shaft in stop position and tape feed lever extension spring unhooked at upper end.
Min. 3 lbs.—Max. 4½ lbs. to start lever moving. Rehook spring.

## TAPE FEED LEVER ADJUSTING SCREW

**Requirements**—Selector shaft in stop position. Unlatch tape feed stop bail.
Some clearance between tape feed pawl and face of first tooth below horizontal center line of feed wheel ratchet.
Max. .006".
To Adjust—Position tape feed lever adjusting screw.

## TAPE FEED STOP BAIL OPERATING LEVER ECCENTRIC

**Requirement**—Insert tape with 0, 1, 4, 5 combination (UR) in tape guide. Rotate pulley shaft until depressing bail roller is on next low dwell of its cam clearance between tape feed stop bail latch and latching surface of tape feed stop bail.

Min. 0.008"—Max. 0.015"

To Adjust—Position operating lever eccentric.

NOTE—Depress upper tape feed blocking arm extension very lightly to free lower blocking extension from tape feed stop bail arm.

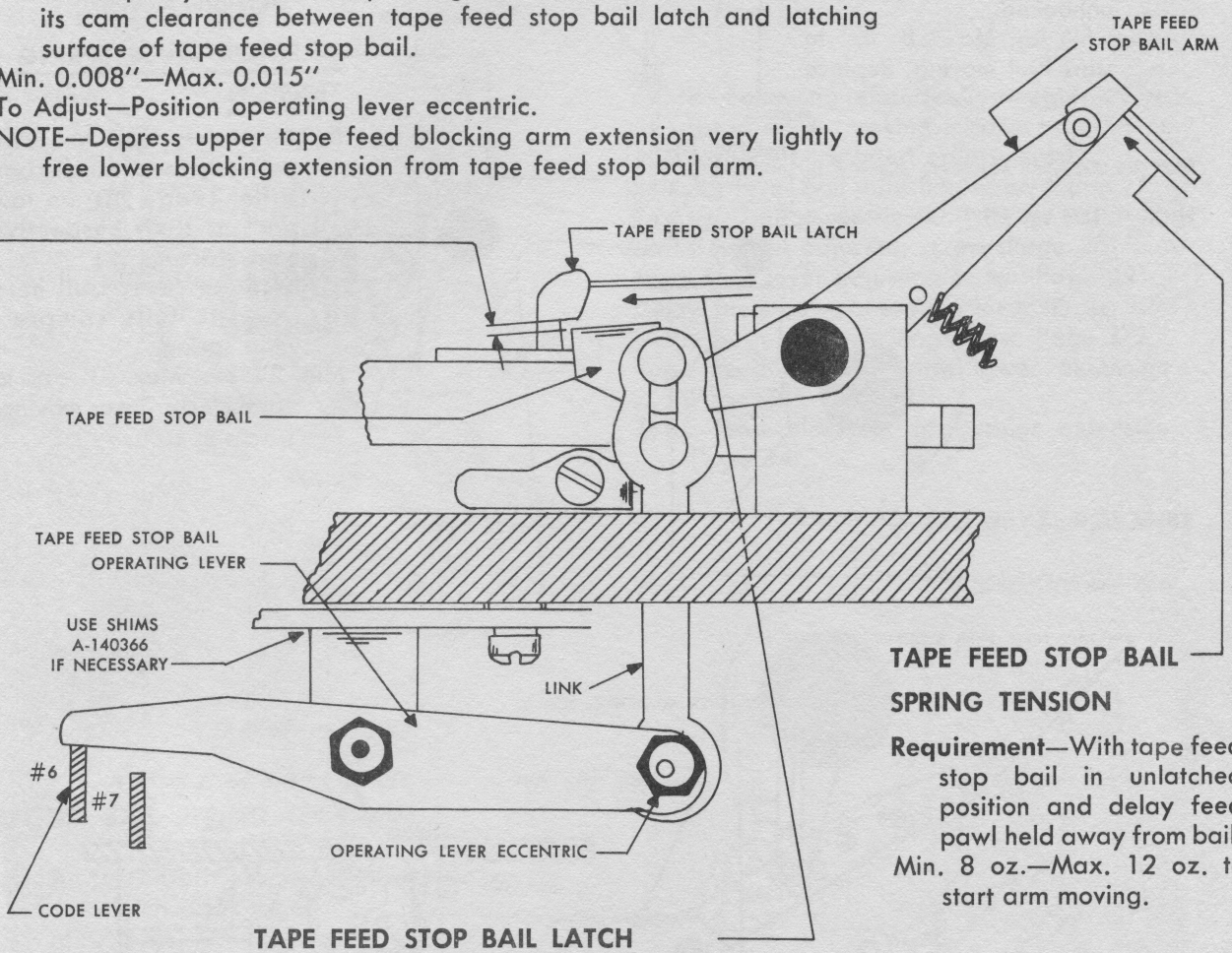


## TAPE FEED STOP BAIL SPRING TENSION

**Requirement**—With tape feed stop bail in unlatched position and delay feed pawl held away from bail.

Min. 8 oz.—Max. 12 oz. to start arm moving.

## TAPE FEED STOP BAIL LATCH SPRING TENSION

**Requirement**—With selector sensing (0, 1, 4, 5 combination) tape, continue rotation of selector shaft until tape feed stop bail is pulled down below lip of latch.

Min. ¼ oz.—Max. ¾ oz. to start latch moving.

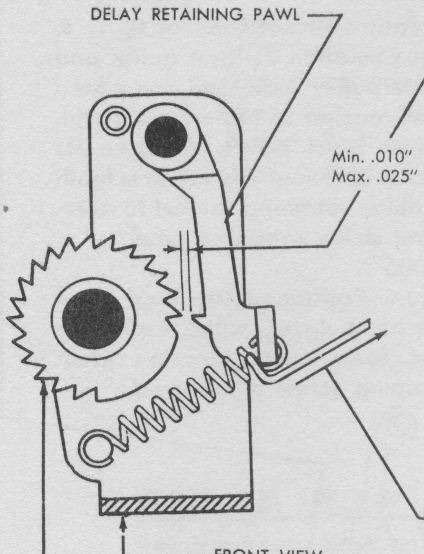


## RATCHET BEARING BRACKET

**Requirement**—With depressing bail roller on low part of its cam, no tape in tape guide and tape feed stop bail in unoperated position, delay push bail adjusting screw should align with delay selector lever (Fig. below). Minimum clearance between delay retaining pawl and delay retaining ratchet, but not less than .010 inch.

To Adjust—Position bracket with its mounting screws loosened.

NOTE—Delay feed pawl should move freely in delay guide clamp plate. Right edge of bracket to be parallel with right edge of selecting assembly base.

## DELAY RETAINING PAWL SPRING TENSION

**Requirement**—With tape feed stop bail (Page 30) in unoperated position,

Min. ½ oz.—Max. 1¼ ozs. to start pawl moving.

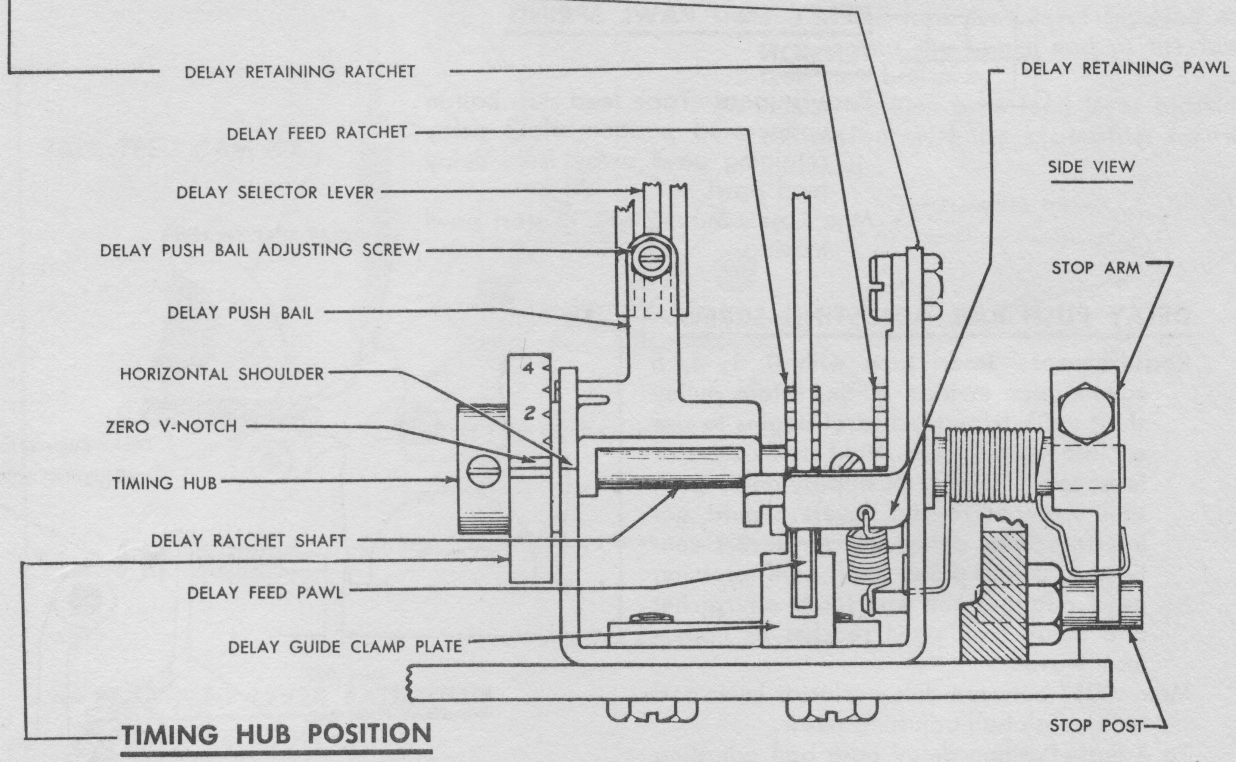


## TIMING HUB POSITION

1. Tape feed stop bail latched (0-1-4-5 code selected).
2. Back off push bail adjusting screw.
3. Rotate ratchet shaft until retaining pawl engages last tooth.
4. Position hub to zero V notch by set screw.

## DELAY FEED PAWL OPERATING LEVER

**Requirement**—Insert tape of 0, 1, 4, 5 combination in tape guide and rotate pulley shaft until delay feed pawl reaches its uppermost travel. Delay feed pawl to move its ratchet sufficiently to cause a tooth on delay retaining ratchet to overtravel delay retaining pawl.

Max. .005".

To Adjust—Position delay feed pawl operating lever with respect to tape feed lever extension when clamping screw is loosened.

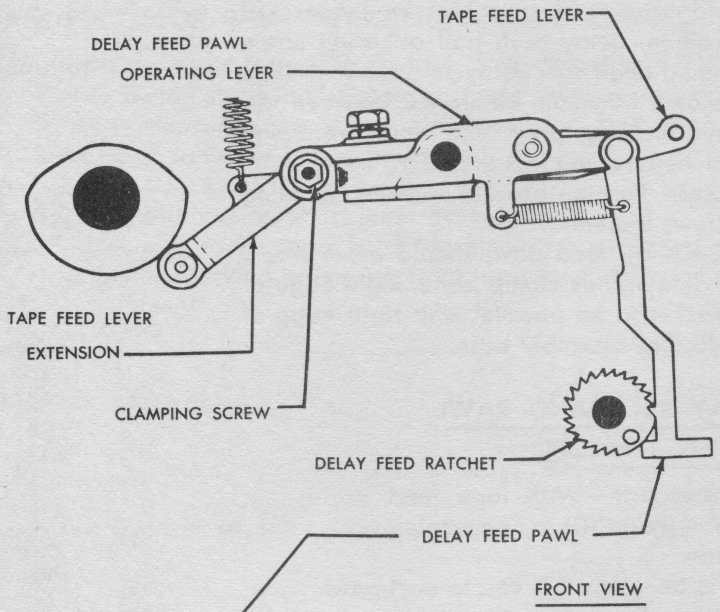


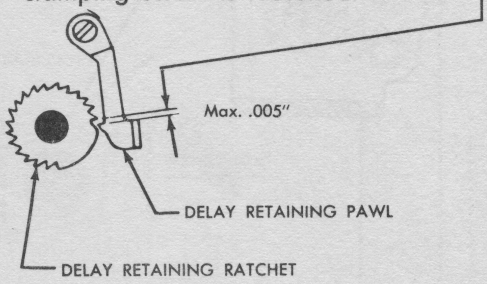


## DELAY FEED PAWL SPRING TENSION

**Requirement**—Tape feed stop bail in unoperated position. Hold delay retaining pawl away from delay feed pawl.

Min. 1 oz.—Max. 2 ozs. to start pawl moving.

## DELAY PUSH BAIL ADJUSTING SCREW

**Requirement** — Insert tape with 0, 1, 4, 5 combination in tape guide, rotate pulley shaft until delay feed pawl begins to rise on last ratchet tooth. Hold delay selector lever to left against its stop by delay push bail screw. (Transfer levers should not interfere with delay selector lever) continue to rotate pulley shaft until retaining pawl engages the last tooth on ratchet and delay feed pawl reaches its uppermost travel.

Max. .005" between delay selector lever and delay push bail adjusting screw.

To Adjust—Position delay push bail adjusting screw.

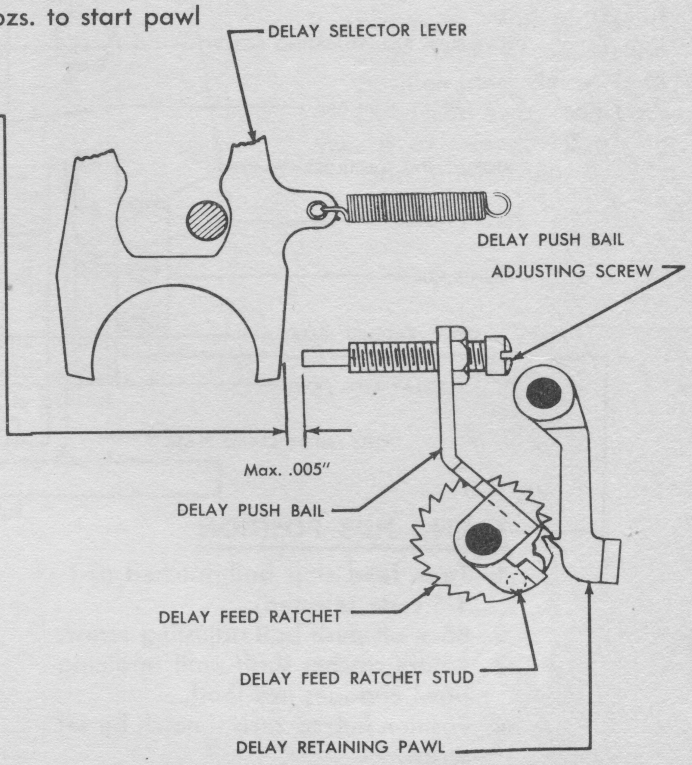

## TIME DELAY ADJUSTMENT

**Requirement**—With delay mechanism unoperated, center third notch on timing hub (representing required delay operations) opposite horizontal shoulder of delay bracket (Page 31).

To Adjust—Position timing hub with its stop arm clamping screw loosened and the stop arm against its stop post.

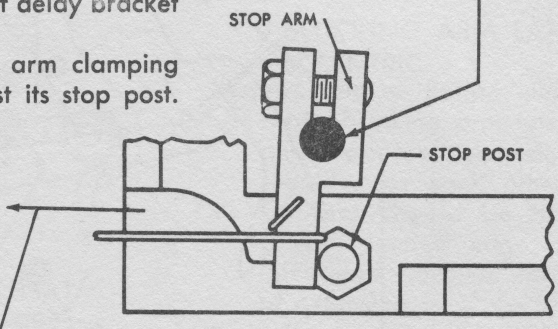


NOTE—A time delay equivalent to one or more operations (range 0 to 18) of the Operating Unit may be set up.

## STOP ARM SPRING TENSION

**Requirement**—Hook an 8 oz. scale over stop arm.

Min. 4 ozs.—Max. 7 ozs. to start arm moving.

To Adjust—Remove stop arm stud and release all spring tension. Seat both ends of spring and rotate stop arm to wind spring one revolution past stud mounting hole.

## TAPE FEED LEVER BLOCKING EXTENSION

**Requirement**—Tape with UR coding in the tape guide. Rotate the pulley shaft until the tape feed cam follower is on the high dwell of the tape feed cam #5. Manually latch the tape feed bail in its operated position.

Min. .015"—Max. .035" between the lower end of the tape feed lever blocking extension and the upper end of the tape feed stop bail arm.

To Adjust—Position tape feed lever blocking extension with its clamping screws loosened.

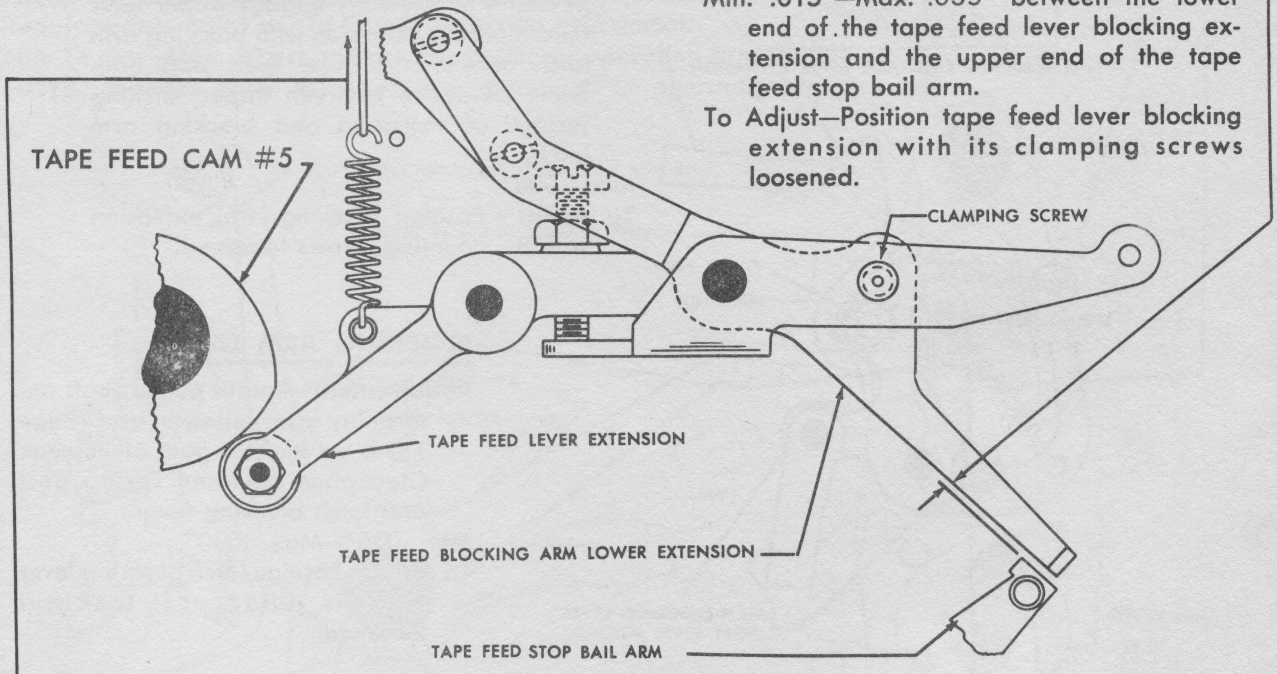


## TAPE FEED LEVER EXTENSION SPRING TENSION

**Requirement**—Rotate pulley shaft until tape feed lever extension roller is on low part of its cam #5.

Min. 16 ozs.—Max. 32 ozs. to stretch spring to its installed length.

NOTE—Replace tape feed upper blocking arm.

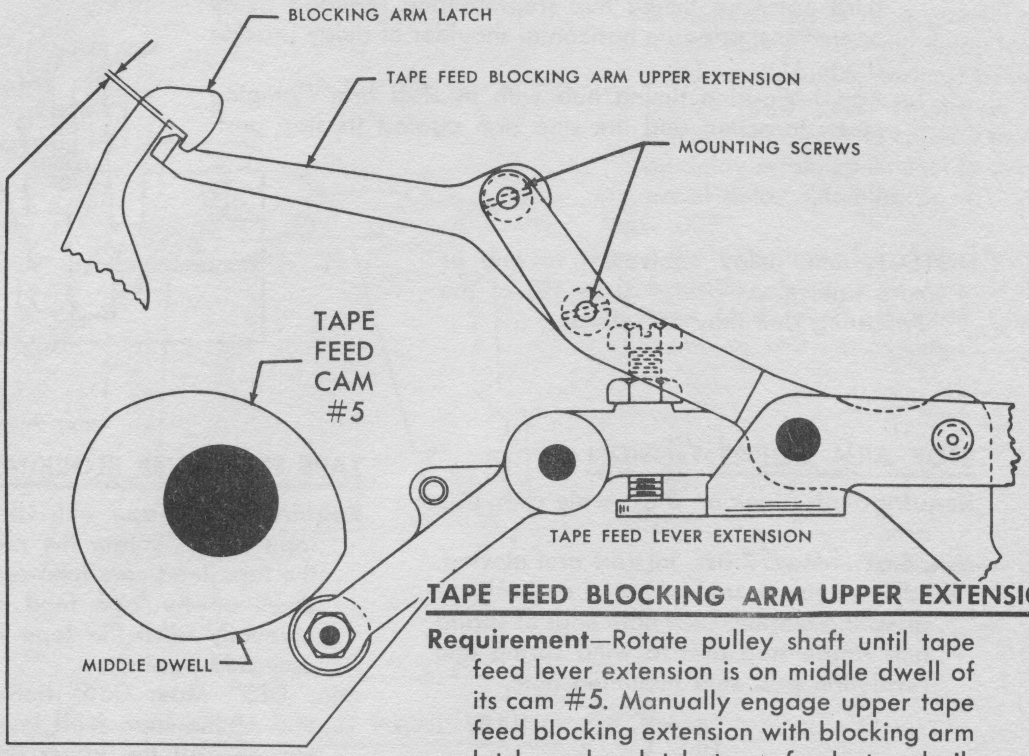


## TAPE FEED BLOCKING ARM UPPER EXTENSION

**Requirement**—Rotate pulley shaft until tape feed lever extension is on middle dwell of its cam #5. Manually engage upper tape feed blocking extension with blocking arm latch and unlatch tape feed stop bail. Some clearance between upper latching surface of extension and blocking arm latch.

Max. .008".

To Adjust—Position blocking arm extension with its mounting screws loosened.

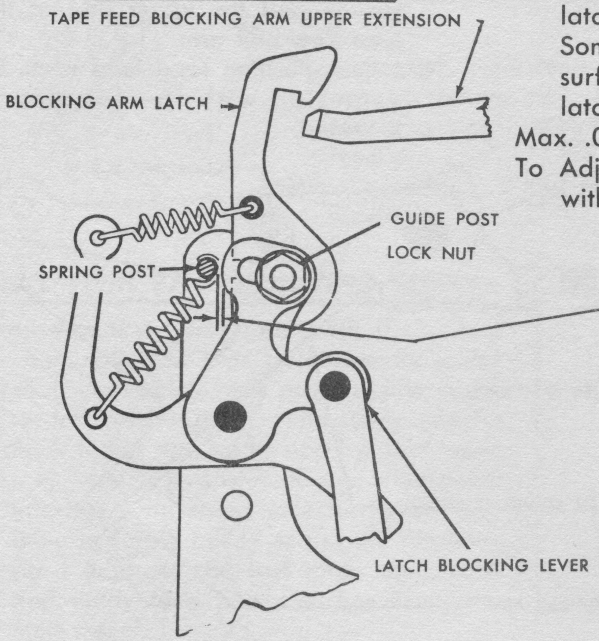


## BLOCKING ARM LATCH

**Requirement**—Rotate pulley shaft until delay cam follower arm (Page 15) is on highest part of its cam. Clearance between spring post and latch blocking lever.

Min. .020"—Max. .030".

To Adjust—Position latch blocking lever with its guide post lock nut loosened.

## RECHECK-TAPE FEED STOP BAIL OPERATING LEVER ECCENTRIC

**Requirement**—Insert tape with "0-3" coding (add thin space) in tape guide. Rotate drive shaft until depressing bail roller is on next low dwell of cam. Clearance between the lip of latch and tape feed stop bail.

Min. .008".

To Adjust—Check the following:

Tape feed stop bail operating lever eccentric (Page 30).

Tape feed upper blocking arm extension (Page 34).

Delay selector lever operating arm stop (Page 35).

## BLOCKING ARM LATCH SPRING TENSION

**Requirement**—With any letter combination selected, rotate pulley shaft until tape feed lever extension (Page 34) is on high dwell of its cam #5.

Min 10 ozs.—Max. 12½ ozs. to start latch moving.

## LATCH RELEASE ARM SPRING TENSION

**Requirement**—With any letter combination selected, rotate pulley shaft until tape feed lever extension (Page 34) is on high dwell of its cam #4.

Min. ½ oz.—Max. 1½ ozs. to start arm moving.

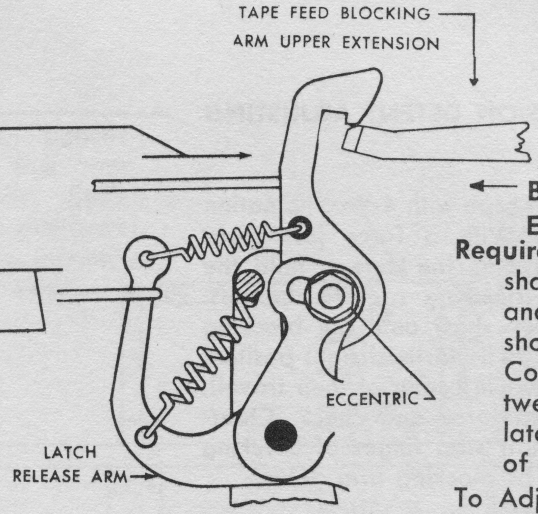


## BLOCKING ARM LATCH ECCENTRIC

**Requirement** — Rotate main shaft. Blocking arm latch and tape feed extension should pass each other. Contact should be between rounded edge of latch and beveled edge of extension.

To Adjust — Position eccentric latch guide.

## DELAY SELECTOR LEVER OPERATING ARM

**Requirement**—Some clearance between delay selector lever operating arm and delay selector lever extension. Max. .005".

To Check—With no tape in tape guide, tape feed stop bail (Page 30) unlatched, and selector shaft in stop position, move repeat blocking arm to right. Rotate selector shaft 180° (approx.) with function blocking arm moved to left so that follower arm left extension rests on repeat blocking arm (Page 11).

To Adjust—Position adjusting screw with its lock nut loosened.

## DELAY SELECTOR LEVER OPERATING ARM SPRING TENSION

**Requirement**—Same as "To Check" on above adjustment.

Min. 14 ozs.—Max. 20 ozs. to start delay selector operating arm moving.

NOTE — Selector lever extension should not rest on operating arm.

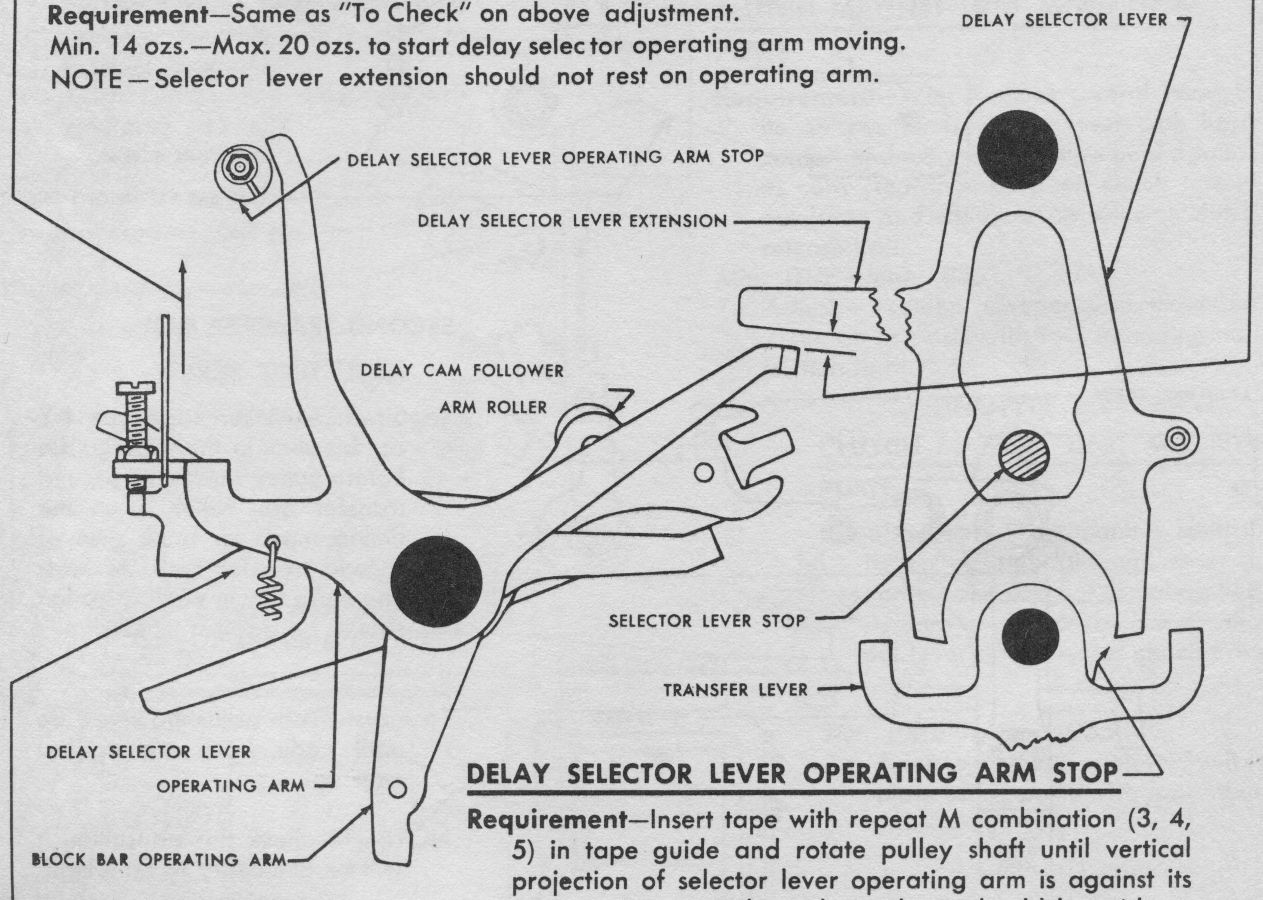


## DELAY CAM FOLLOWER ARM ASSEMBLY

## DELAY SELECTOR LEVER OPERATING ARM STOP

**Requirement**—Insert tape with repeat M combination (3, 4, 5) in tape guide and rotate pulley shaft until vertical projection of selector lever operating arm is against its (eccentric) stop. Delay selector lever should be midway between its right and left stop position—gauge by eye.

To Adjust—Position stop (eccentric) with its lock nut loosened.

## CODE BAR EXTENSION DETENT ADJUSTING SCREW

**Requirement**—Insert tape with 4-Y combination in tape guide. With a force just great enough to overcome the detent, hold the repeat sensing blocking arm to the left. Rotate the pulley shaft until the blocking arm has moved to its furthest right position (six code bar links in center of their travel). Remove leftward force and check. Clearance between left stop finger of blocking arm and roller of blocking arm detent:

Min. .025"—Max. .035"

NOTE—A .025" wire gage should pass freely between block arm finger and roller. Both arm and roller will move. A .035" wire gage should cause a noticeable lifting of the block arm detent away from the block arm.

To Adjust—Position adjusting screw up or down to obtain clearance.

(IMPORTANT) Screw should have enough spring tension to insure stability under operation.

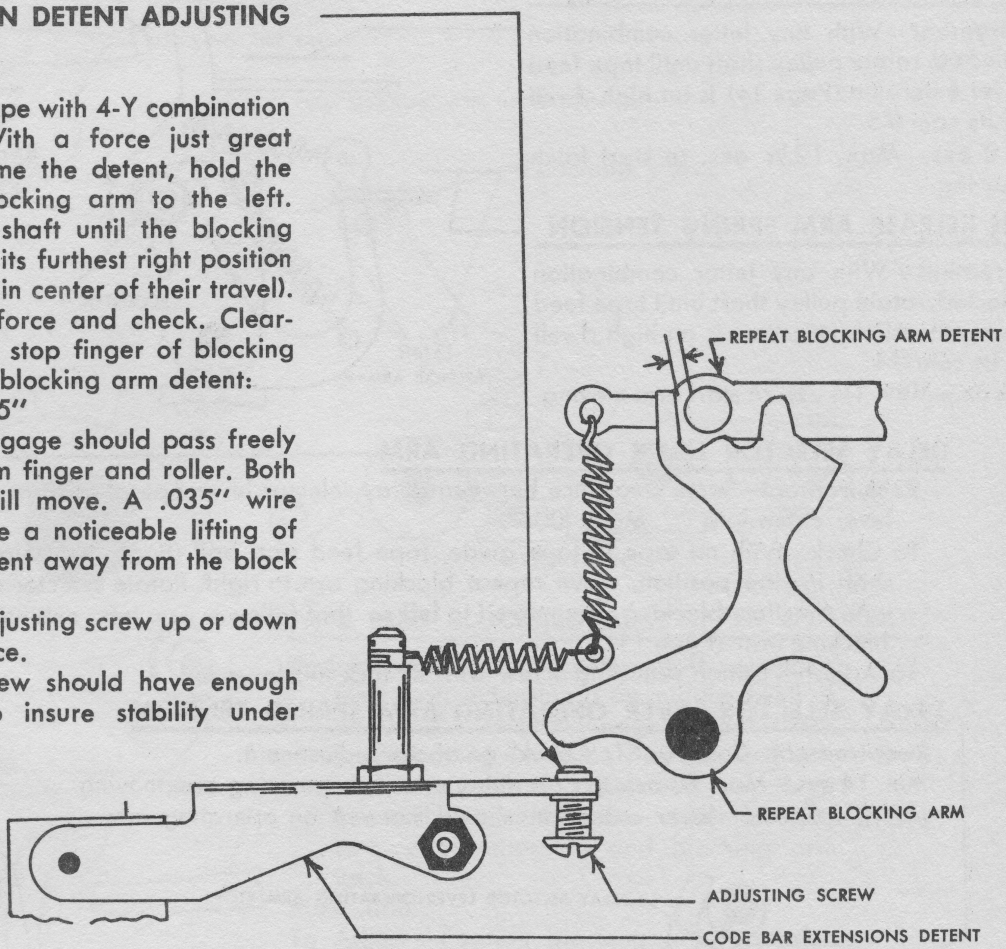


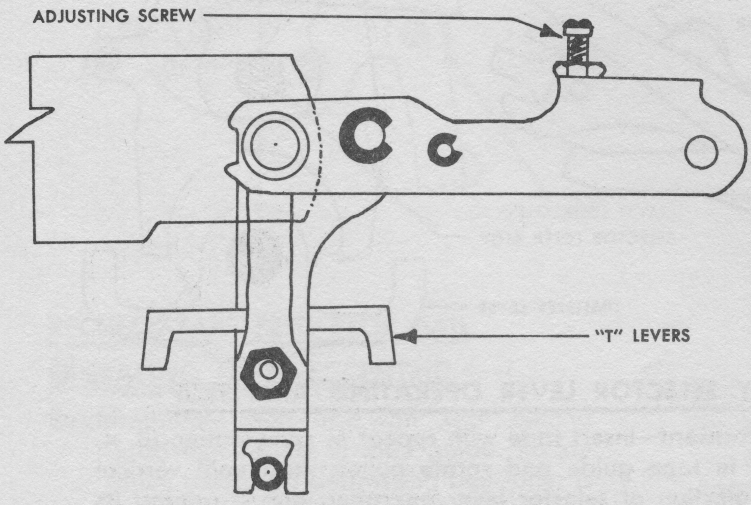


## SECOND TRANSFER BAIL ADJUSTING SCREW

**Requirement**—Insert tape with 4-Y combination in the tape guide. Rotate pulley shaft until second transfer bail roller is on the timing mark on back side of second transfer cam. At least one code bar in each direction should be against its stop.

To Adust—Turn adjusting screw up until code bars are against stop.

NOTE—To check this adustment it will be necessary to remake it.

CAUTION — Check that there is no interference between T levers and code bar extensions in transferred position.

## CLUTCH MAGNET SWITCH

**Requirement**—Insert .015" shim between magnet core and armature. Pull armature against core manually. Switch should make and have some overtravel.

To Adjust—Position switch with mounting screws loosened. Tighten screws.

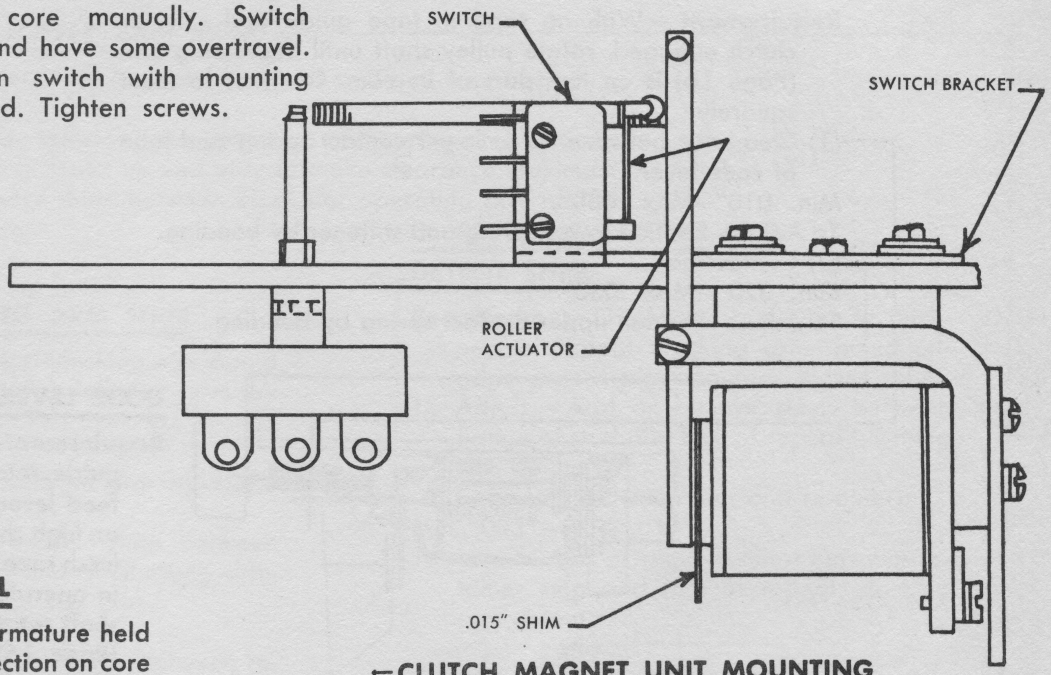


## CLUTCH MAGNET COIL

**Requirement**—Magnet armature held against its cores. Projection on core centrally located with respect to holes in armature.

To Adjust—Position magnet core mounting screws.

## CLUTCH MAGNET UNIT MOUNTING PLATE

**Requirement**—With manual control lever in its "on" position (manual reset cam horizontal) and magnet armature held against its core clearance between clutch throwout lever and shoulder on selector clutch release bail.

Min. .015"—Max. .035".

To Adjust — Position magnet unit mounting plate on its posts with four mounting nuts friction tight.

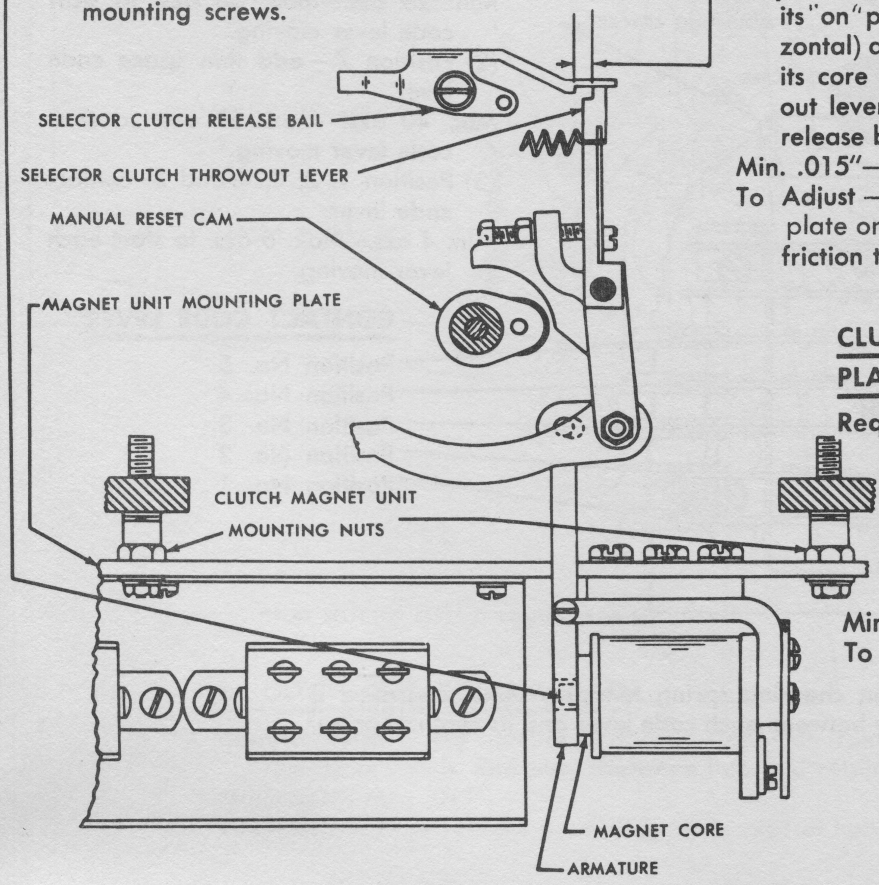


## (LINOTYPE ELEKTRON)

## CLUTCH MAGNET UNIT MOUNTING PLATE

**Requirement**—With manual control lever in its "on" position (manual reset cam horizontal) and magnet armature held against its core clearance between clutch throwout lever and selector clutch driven member.

Min. .035"—Max. .055"

To Adjust—Position magnet unit mounting plate on its posts with four mounting nuts friction tight.

## CODE LEVER AND FUNCTION CONTACTS

**Requirement** — With no tape in tape guide and selector clutch engaged, rotate pulley shaft until depressing bail (Page 16) is on low part of its cam. Contacts to meet squarely.

(1) Clearance between tip of lower contact spring and lobe of code lever.
Min. .010"—Max. .030".
To Adjust—Position lower spring and stiffener by bending.

(2) Contact gap.
Min. .020"—Max. .030".
To Adjust—Position upper contact spring by bending.

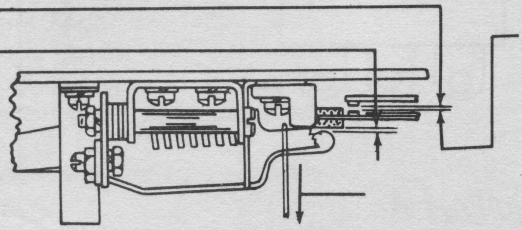

## CODE LEVER SPRING TENSION

**Requirement**—With no tape in tape guide, rotate pulley shaft until tape feed lever extension (Page 33) is on high dwell of its cam. Manually latch tape feed stop bail (Page 30) in operated position and continue shaft rotation until depressing bail (Page 16) is on low dwell of its cam.

(1) Position 6—upper and lower rail code lever.
Min. 28 ozs.—Max. 38 ozs. to start code lever moving.

(2) Position 7 — add thin space code lever.
Min. 40 ozs.—Max. 50 ozs. to start code lever moving.

(3) Position 1, 2, 3, 4 and 5—contact code lever.
Min. 4 ozs.—Max. 6 ozs. to start each lever moving.

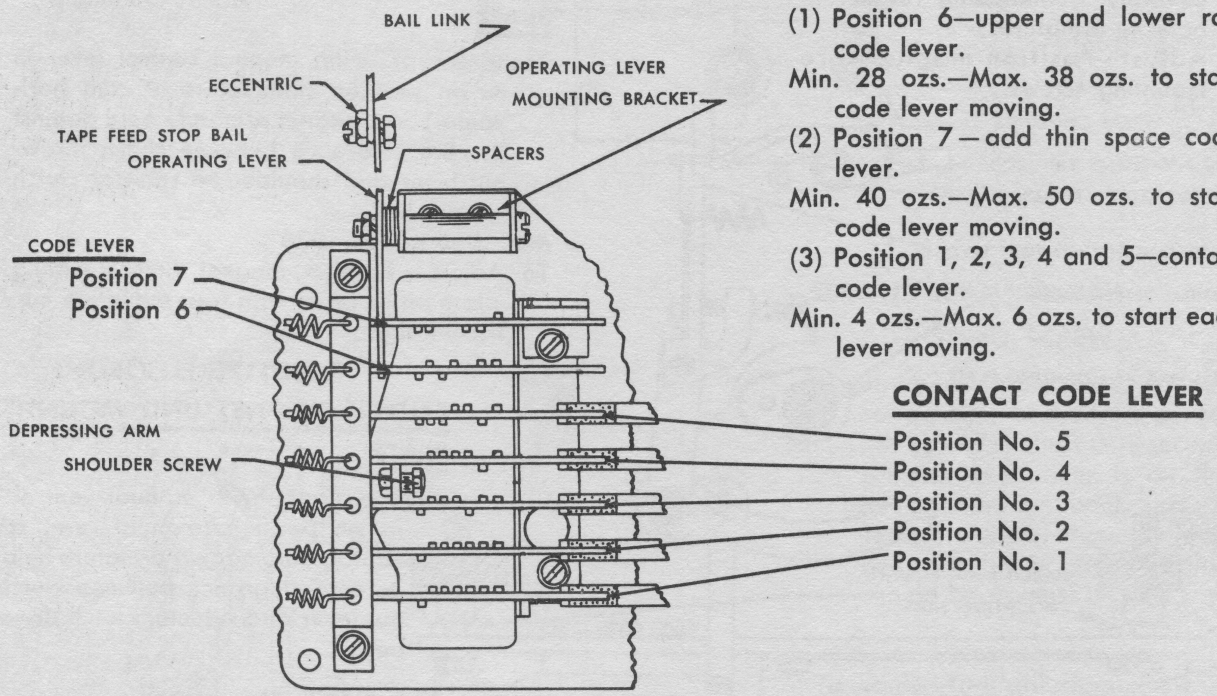


NOTE — When checking spring tensions, some clearance is necessary between each code lever and its contact spring.

NOTE—If either of the following (four) arms are removed for servicing, check alignment and end play requirements.

## A. DELAY CAM FOLLOWER ARM SHIM

**Requirement**—Some clearance between flange of stud and face of bushing. Max. .005".
To Check—Unhook delay selector lever operating arm spring and block bar operating arm spring. (Take up end play to make clearance maximum).
To Adjust—Add or remove shims between block bar operating arm and delay cam follower arm.

## B. REPEAT BLOCKING ARM SHIM

**Requirement**—(1) Repeat blocking arm should align with delay cam follower arm by two-thirds or more of its thickness. Gauge by eye.
To Check—Rest delay follower arm on repeat blocking arm.
To Adjust—Add or remove shims between flange of stud and hub of blocking arm.
(2) Repeat blocking arm end play.
Min. .003"—Max. .011".
To Adjust—Add or remove shims. Between retainer ring and hub of repeat blocking arm.

## C. REPEAT BLOCKING ARM DETENT SHIM

**Requirement**—(1) At least two-thirds thickness of repeat blocking arm should engage repeat blocking arm detent roller.
To Adjust—Add or remove shims between flange of stud and hub of repeat blocking arm detent.
(2) End play (between hub and retainer).
Min. .003"—Max. .011".
To Adjust—Add or remove shims between retainer ring and hub of repeat blocking arm detent.

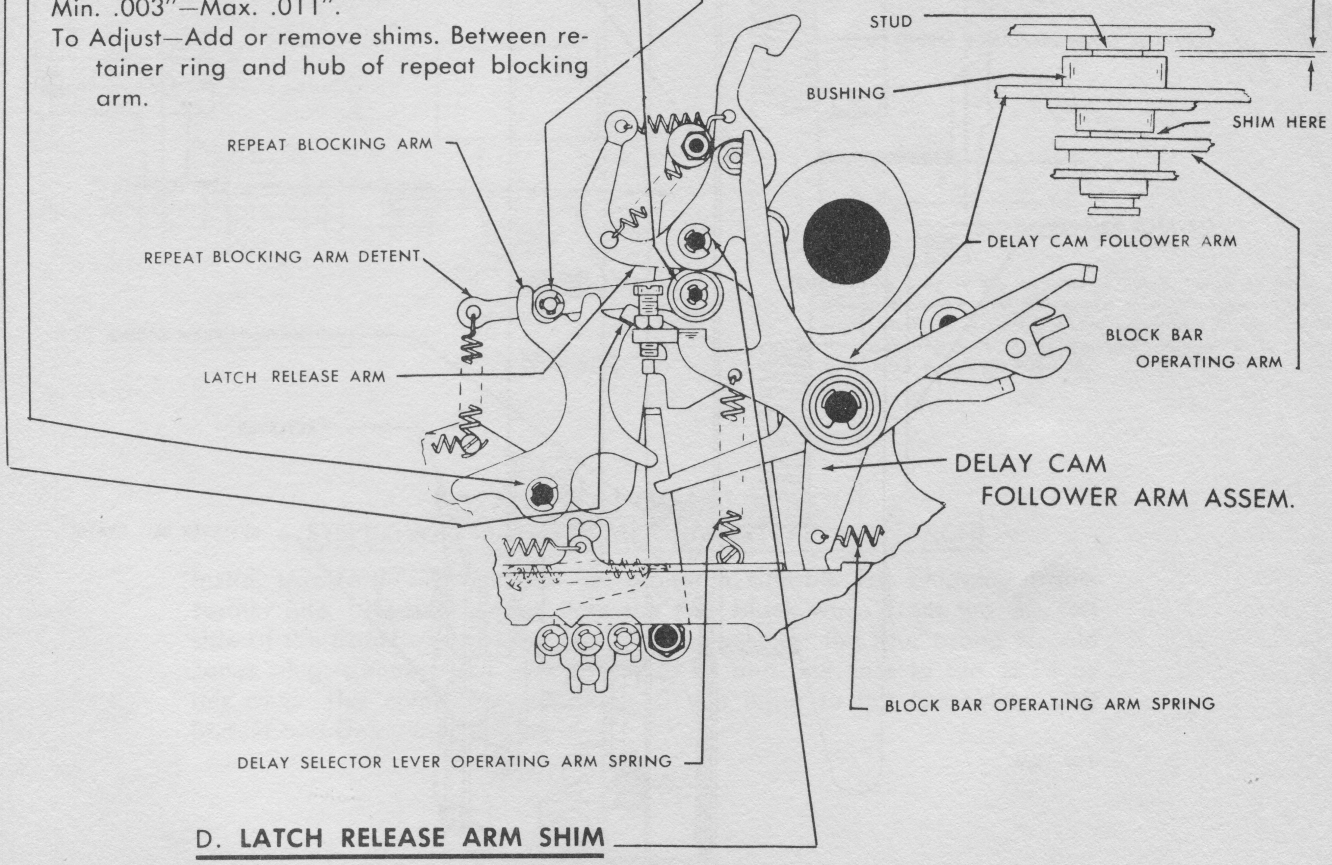


## D. LATCH RELEASE ARM SHIM

**Requirement**—Equal number of shims (±one) at front and back of latch release arm hub. End play (between hub and retainer ring).
Min. .003"—Max. 011".
To Adjust—Add or remove shims at front or rear of hub.

(INTERTYPE MONARCH — KEYBOARDLESS)

## MOUNT THE OPERATING UNIT ON THE SLUG LINECASTING MACHINE AS FOLLOWS:

(INTERTYPE MONARCH — KEYBOARD)

Remove two hanger pilot screws from Operating Unit.
Back off knurled clamp screw mounted on keyboard base casting and two stop screws projecting from left or right hanger.
Raise assembling elevator to its mid-position where it will be supported by elevator latch.
Place both arms under Operating Unit, supporting it on the hands and forearms. Position Operating Unit under keyboard so that openings in hangers will align with hanger guides and slide in place. Insert hanger pilot screws.
Connect reed knife linkage.

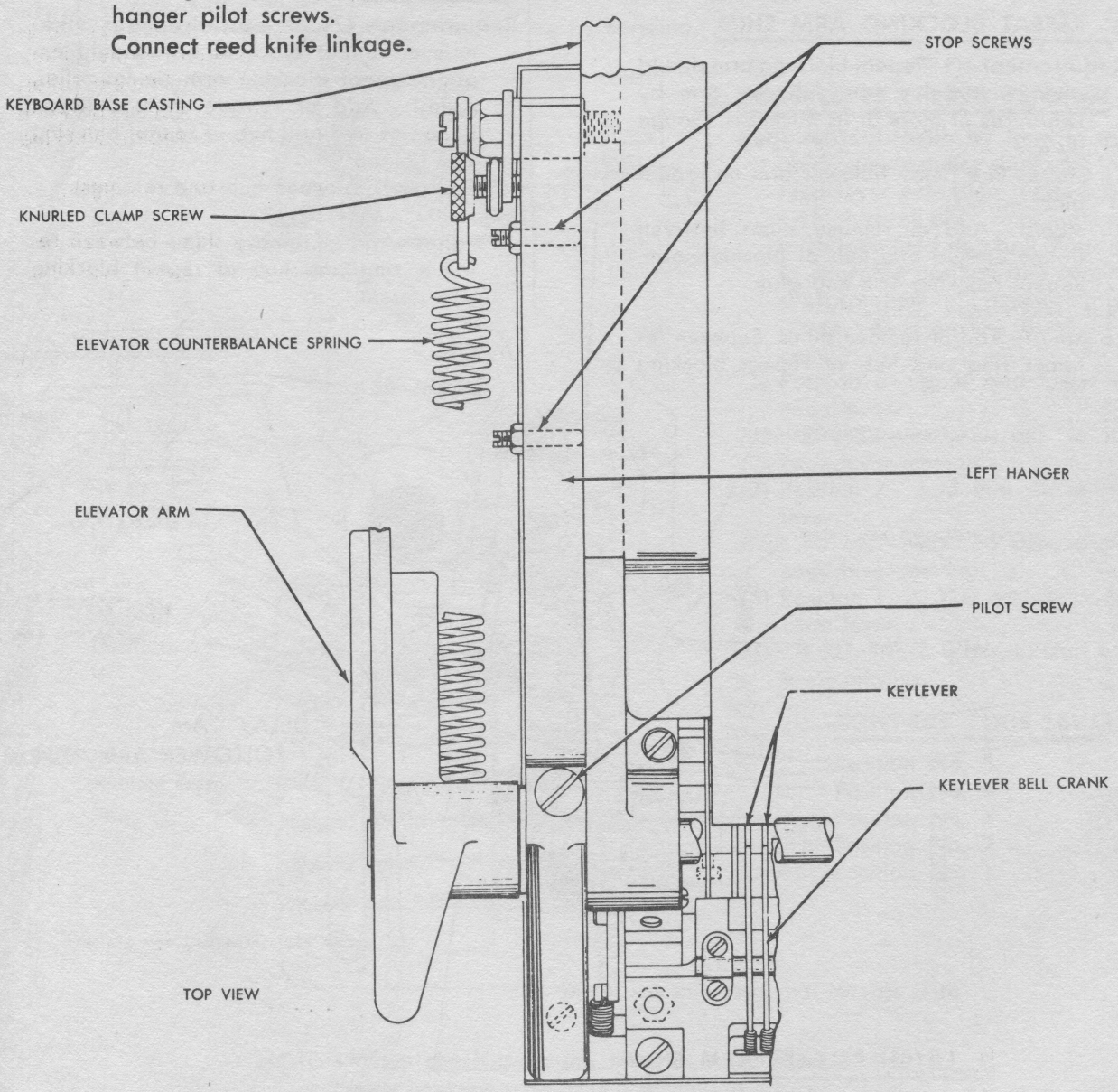

## REED KNIFE TIMING CAM ADJUSTMENT

**Requirement**—With the operating in stop position, the cam follower roller should be in line with the timing mark on cam.

To Adjust—Loosen lock nuts and position cam.

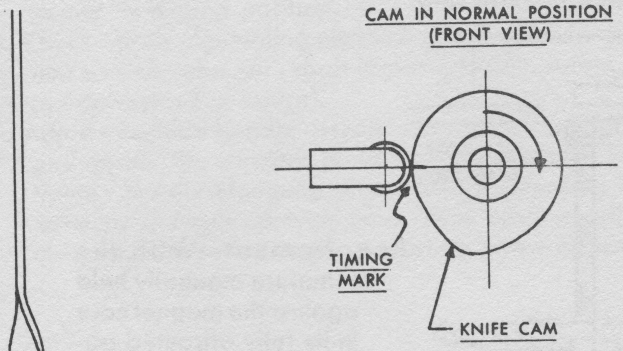


## KEYLEVER BELLCRANK ADJUSTMENT

**Requirement**—The Bellcranks should align with the keylevers on the Monarch and clearance between the bellcranks and the keylevers should be not more than .010.

To Adjust—Loosen the two mounting screws on each of the hangers of the TOU and position the operating unit base to meet the above requirement. Tighten hanger screws.

**(INTERTYPE MONARCH — KEYBOARDLESS)**

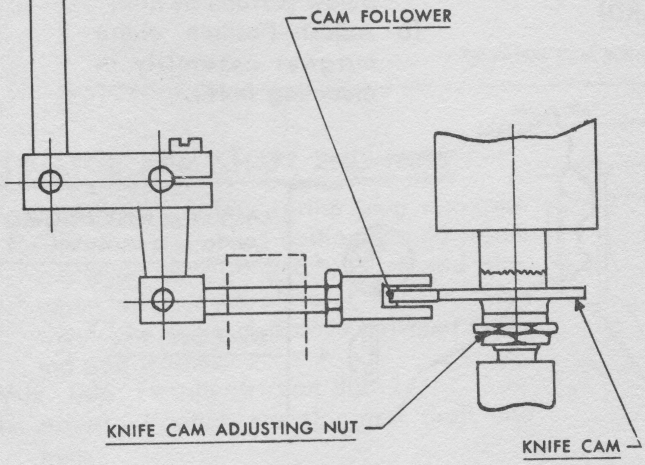


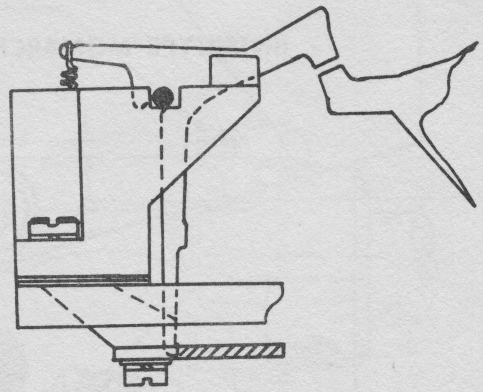

NOTE—If the play in the hangers is not sufficient to obtain proper clearance add or remove shims at keylever bellcrank assembly. After the above adjustment is made lock the operating unit in its adjusted position using stop and clamp screws on Page 36.

## INSTALLATION OF 110-30 VOLT STEPDOWN TRANSFORMER (INTERTYPE MONARCH)

Install transformer at location on Monarch suitable for plugging transformer into 110 VAC outlet. Join the two black wires from the 30 volt side of the transformer to the Monarch harness for the four prong female Jones plug. Connect one wire to pin #13 and one wire to pin #14 of this plug. This connection supplies 30 volt input to the Operating Unit Spaceband Delay Mechanism.

## SPACE BAND MAGNET ASSEMBLY

**Requirement**—With the armature released and spaceband plunger just return to release position, the gap between center of magnet core and armature must not exceed .080".

To Adjust—Move downstop screw in or out to open or close gap.

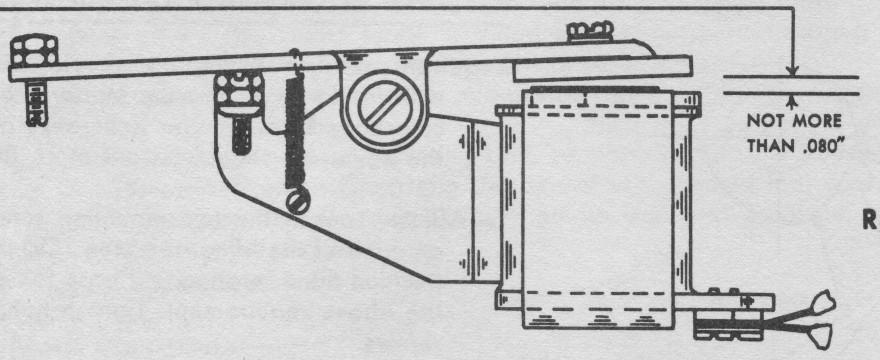


**(INTERTYPE MONARCH — KEYBOARDLESS)**

**(INTERTYPE MONARCH — KEYBOARD)**

**Requirement**—With the armature manually held against the magnet core in its fully attracted position, the spaceband release plunger in the space band box should retract 1/64 to 1/32 below surface of box.

To Adjust—Position entire magnet assembly in mounting holes.

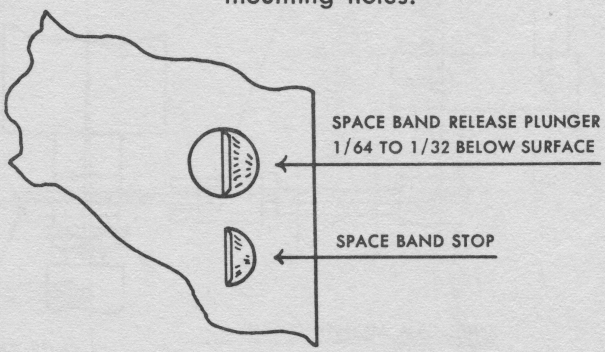


**Requirement**—With armature released there should be some to .005" clearance between the upstop screw and square ring.

To Adjust—Adjust upstop in or out to maintain clearance.

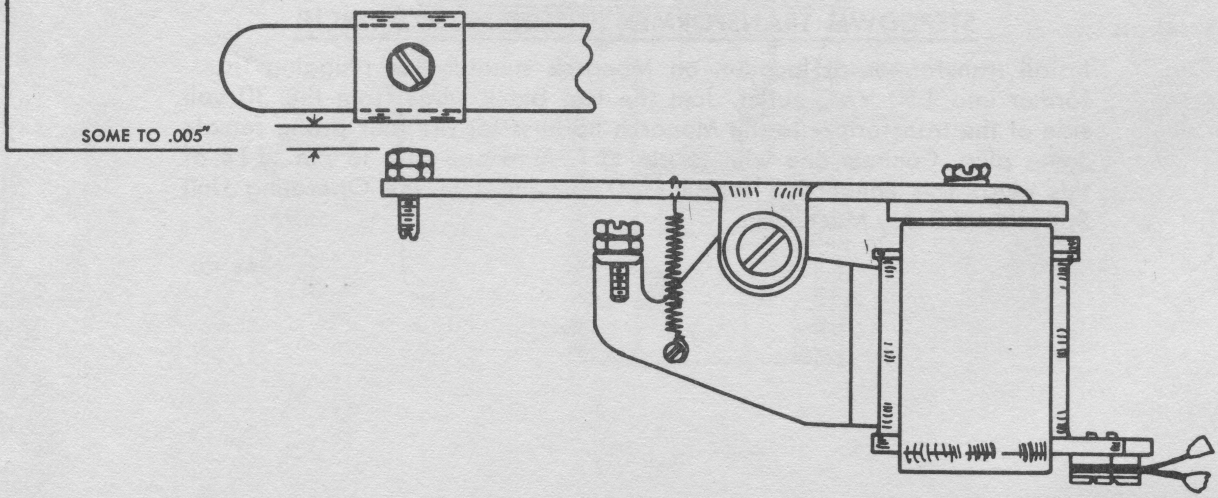

## ELEVATOR HANDLE AND CAM ROLLER

**Requirement**—Elevator cam roller should rest firmly on low part of its cam and elevator arm shaft should have minimum end play without binding in any operating position.

To Check—With assembling elevator (Page 46) fully seated in its lower position and elevator cam shaft in stop position, rotate cam roller with fingers (no downward pressure).

To Adjust—Position handle assembly to right or left for end play requirement and gently lift elevator handle to depress cam roller against its cam—tighten handle clamping screw before releasing hold. Refine roller adjustment if required with cam roller casting adjusting screw. Recheck elevator cam roller casting adjusting screw adjustment.

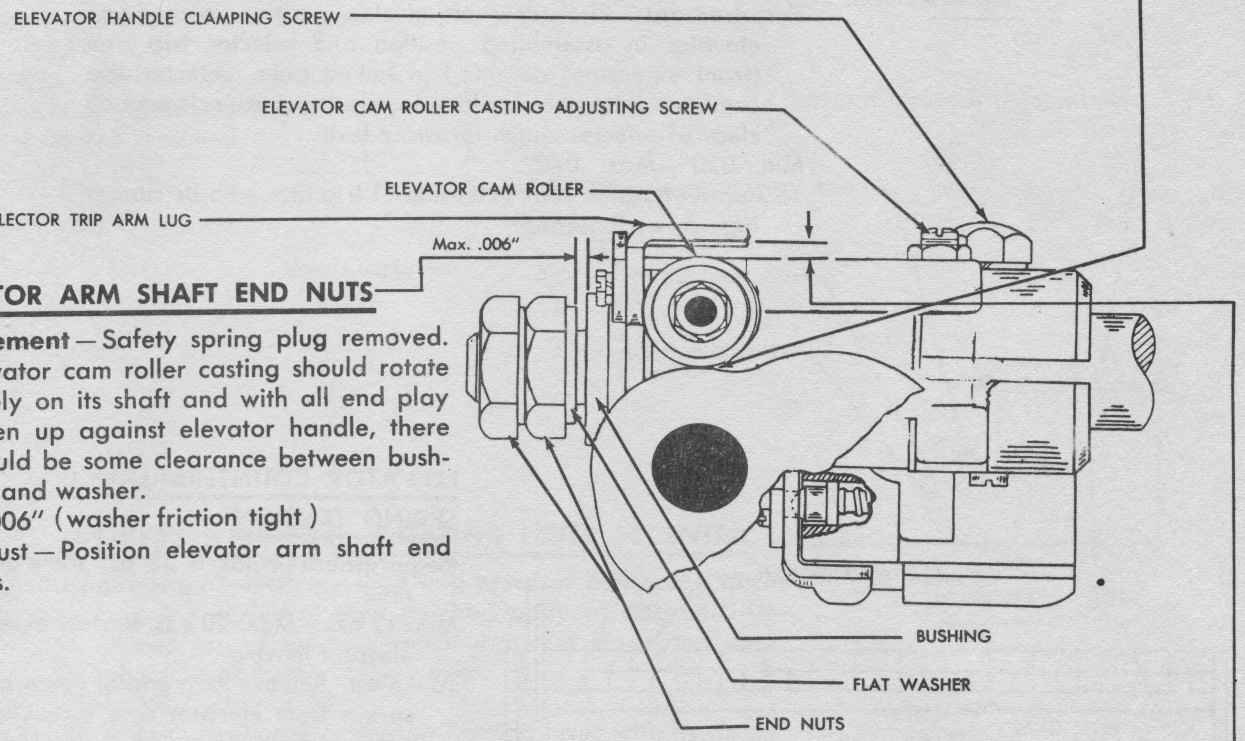


## ELEVATOR ARM SHAFT END NUTS

**Requirement** — Safety spring plug removed. Elevator cam roller casting should rotate freely on its shaft and with all end play taken up against elevator handle, there should be some clearance between bushing and washer.

Max. .006" (washer friction tight)

To Adjust — Position elevator arm shaft end nuts.

## ELEVATOR CAM ROLLER CASTING ADJUSTING SCREW

**Requirement**—When trip arm is raised so as to engage its lowest detent hole with detent plunger, clearance between trip arm lug and elevator cam roller casting.

Min. .020"—Max. .030".

To Adjust — Loosen elevator clamp screw to free handle on its shaft. With sufficient tension on safety spring to hold elevator casting screw against elevator handle casting, position the adjusting screw.

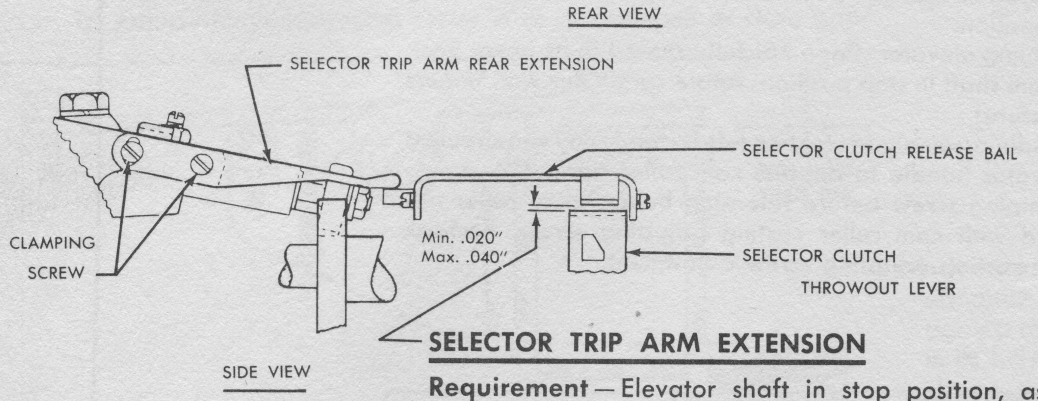


## SELECTOR TRIP ARM EXTENSION

**Requirement** — Elevator shaft in stop position, assembling elevator in assembling position and selector trip arm (front extension) detented in lowest hole. Selector trip arm rear extension should hold selector clutch release bail clear of selector clutch throwout lever.

Min. .020"—Max. .040".

To Adjust—Position rear extension of trip arm with its clamping screws loosened.

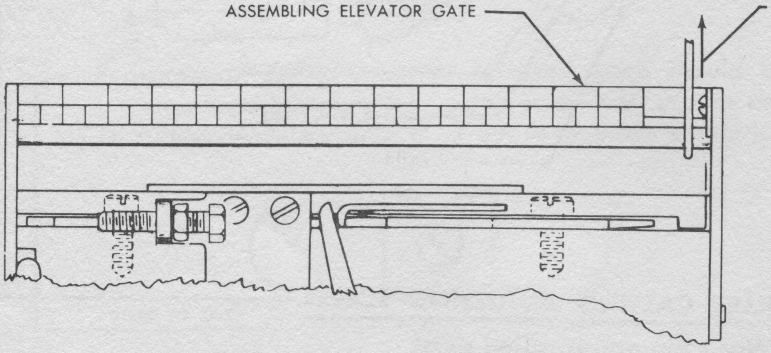


## ELEVATOR COUNTERBALANCE SPRING TENSION

**Requirement**—Hook a 32 oz. scale beneath gate.

Min. 12 ozs.—Max. 20 ozs. to start assembling elevator moving.

To Adjust—Remove loop end of couterbalance spring from elevator arm projection and place in next hole (toward shoulder screw for increased tension).

NOTE — This adjustment should permit assembling elevator to return fully and quickly to assembling position after delivery of an assembled line, but without striking its lower stop with excessive force.

Note: This adjustment should permit assembling elevator to return fully and quickly to assembling position after delivery of an assembled line, but without striking its lower stop with excessive force.

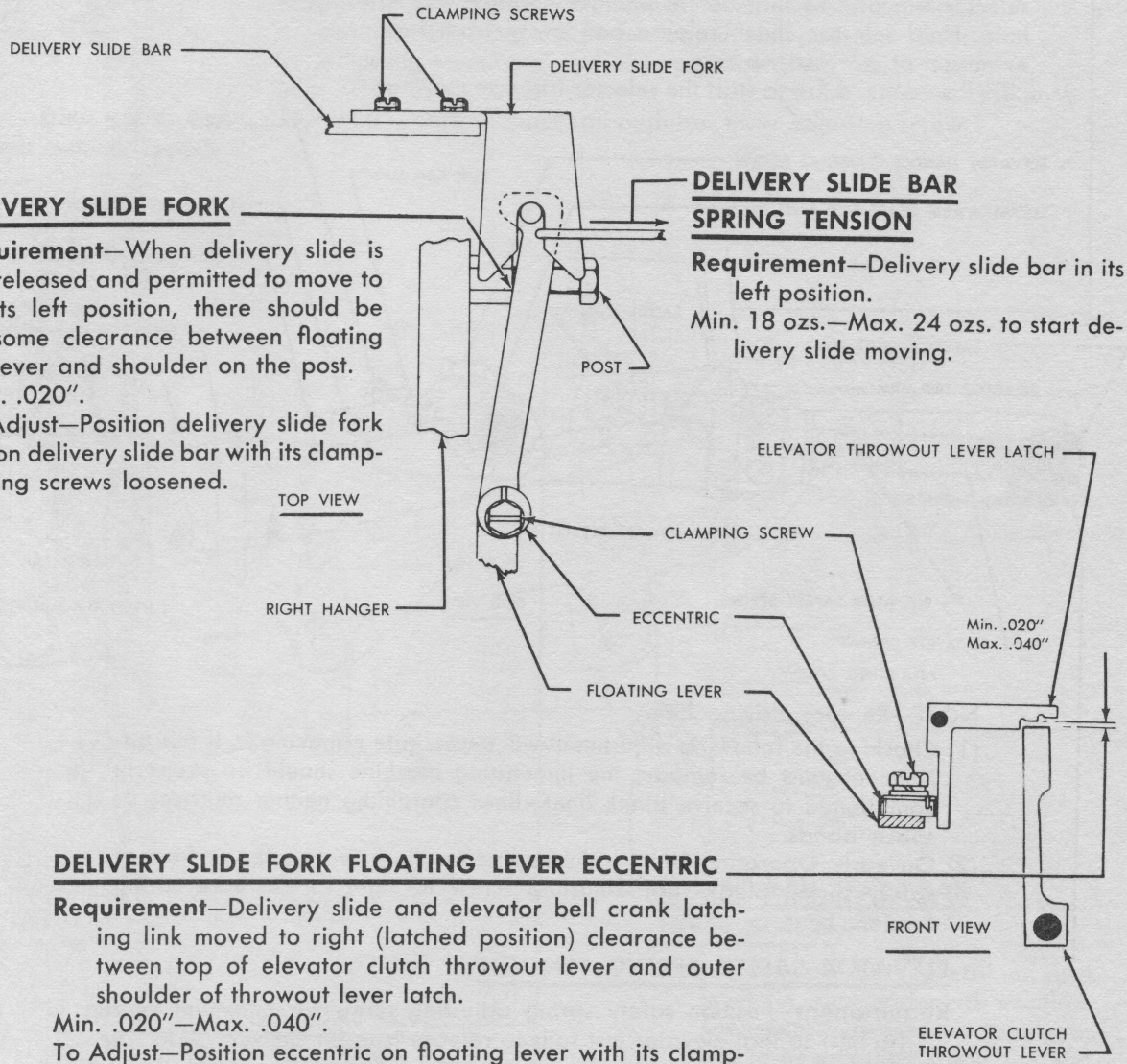


## DELIVERY SLIDE FORK

**Requirement**—When delivery slide is released and permitted to move to its left position, there should be some clearance between floating lever and shoulder on the post.

Max. .020".

To Adjust—Position delivery slide fork on delivery slide bar with its clamping screws loosened.

## DELIVERY SLIDE BAR SPRING TENSION

**Requirement**—Delivery slide bar in its left position.

Min. 18 ozs.—Max. 24 ozs. to start delivery slide moving.

## DELIVERY SLIDE FORK FLOATING LEVER ECCENTRIC

**Requirement**—Delivery slide and elevator bell crank latching link moved to right (latched position) clearance between top of elevator clutch throwout lever and outer shoulder of throwout lever latch.

Min. .020"—Max. .040".

To Adjust—Position eccentric on floating lever with its clamping screws loosened.

## SELECTOR TRIP ARM DETENT SPRING TENSION

**Requirement**—With elevator shaft in stop position, move selector trip arm so that detent plunger engages lowest hole. Hold selector clutch release bail away from rear extension of selector trip arm.

Min. 3½ lbs.—Max. 6 lbs. to start the selector trip arm moving.

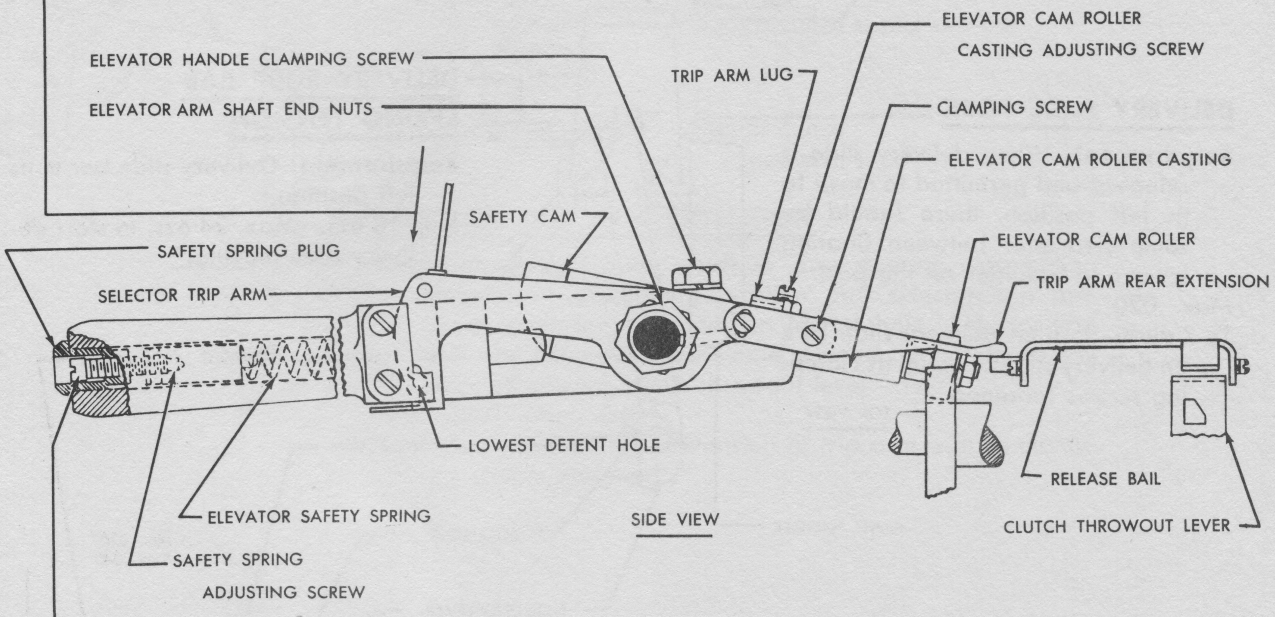


NOTE—Replace driving belt.

(1) Checking the following adjustment will necessitate remaking it. If this adjustment must be remade, the linecasting machine should be properly conditioned to receive blank lines—lines containing neither matrices or space bands.

(2) On early Operating Units (adjusting screw flush with outer surface of safety spring plug), turn adjusting screw to right to decrease spring tension.

## ELEVATOR SAFETY SPRING TENSION

**Requirement**—Position safety spring adjusting screw for minimum tension (to left) so that elevator just fails to release transfer delivery slide. Then slowly increase spring tension one-quarter turn at a time until elevator just releases the transfer delivery slide. Test as outlined below and give adjusting screw one turn additional in direction last rotated.

To Check—Insert tape with series of elevate combinations (No. 2 code) in tape guide. Single elevator signals may be sent by turning manual control lever clockwise to start position and quickly returning it to stop position. Test after each change in adjustment of the screw. After spring is adjusted check tension. With 12 lb. scale hooked on elevator front plate and pulled downward.

Min. 3½ lbs.—Max. 4½ lbs. to prevent elevator from rising when elevator signal is sent. Elevator should start to rise against a 3 lb. pull.

## UPPER RAIL PUSH BAR LEVER SCREW

**Requirement**—Lateral rail manual lever in front detented position. Clearance between upper rail push bar lever adjusting screw and end of upper operating link.
Min. .010"—Max. .020".
To Adjust—Position upper rail push bar lever adjusting screw.

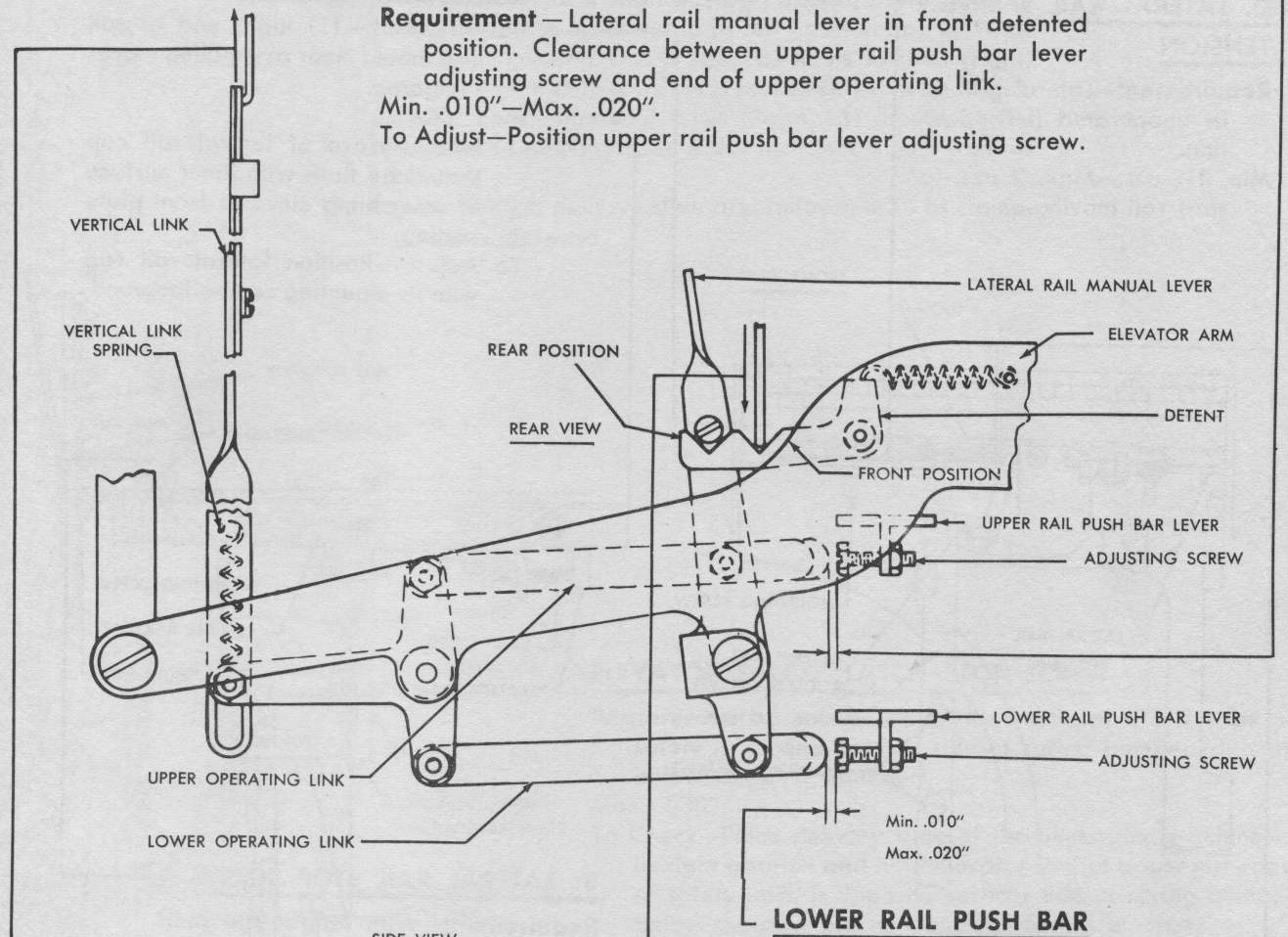


## LOWER RAIL PUSH BAR LEVER SCREW

**Requirement**—Lateral rail manual lever in rear detented position. Clearance between lower rail push bar lever adjusting screw and end of lower operating link.
Min. .010"—Max. .020".
To Adjust—Position lower rail push bar lever adjusting screw.

## LATERAL RAIL MANUAL LEVER DETENT SPRING TENSION

**Requirement**—Lateral rail manual lever in rear detented position.
Min. 1¾ lbs.—Max. 2¼ lbs. to start detent moving.

## VERTICAL LINK SPRING TENSION

**Requirement**—Detach upper end of vertical link from lateral rail actuating lever (Page 48).
Min. 4½ lbs.—Max. 5½ lbs. to start link moving.

## D. LATERAL RAIL SPRING TENSION

**Requirement**—Lateral rail in its unoperated (left) position.

Min. 1½ ozs.—Max. 2 ozs. to start rail moving.

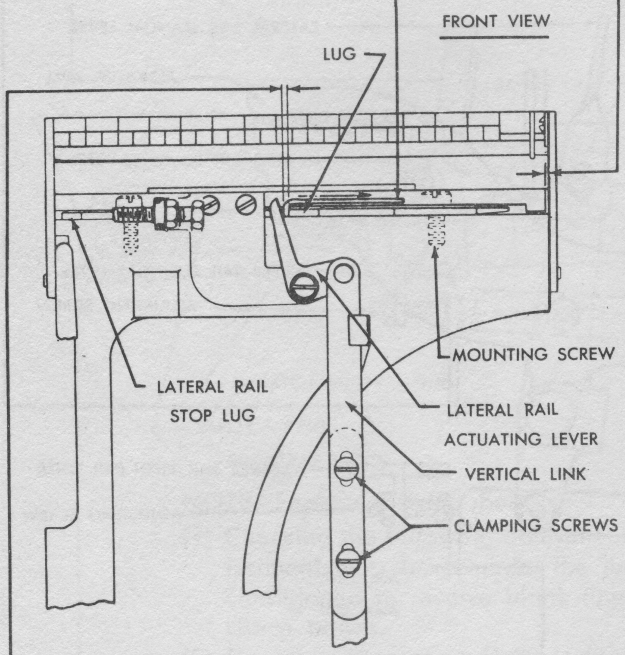


## A. LATERAL RAIL CAP

**Requirement**—(1) Right end of rail cap should clear assembling elevator gate.

Max. .004".

(2) Inner surface of lateral rail cap should be flush with inner surface of assembling elevator front plate casting.

To Adjust—Position lateral rail cap with its mounting screws loosened.

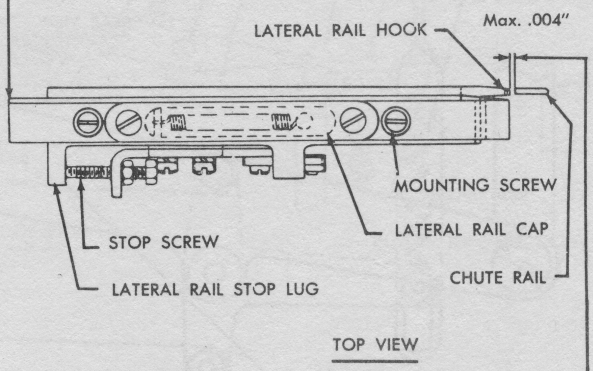


## B. LATERAL RAIL STOP SCREW

**Requirement**—With lateral rail held against its stop screw, some clearance between lateral rail hook and chute rail.

Max. .004".

To Adjust—Position lateral rail stop screw.

## C. VERTICAL LINK

**Requirement**—With lateral rail manual lever (Page 40) detented in front position, clearance between lateral rail actuating lever and lug.

Min. .020"—Max. .040".

To Adjust—Increase or decrease length of vertical link with its clamping screws loosened.

NOTE—Lateral rail stop lug should rest firmly against stop screw, with lateral rail lever detented in rear position.

## DELIVERY SLIDE ARM FOLLOWER

**Requirement**—Elevator shaft in stop position. Move delivery slide (linecasting machine) to its left position and elevator bell crank latching link (Page 18) to its latched (right) position. As the delivery slide is moved slowly to the right, elevator clutch throwout lever (Page 43) should be released when delivery slide is 2¼ inch to 1¾ inch from its right stop.

To Adjust—Position delivery slide arm follower with its clamping screws loosened.

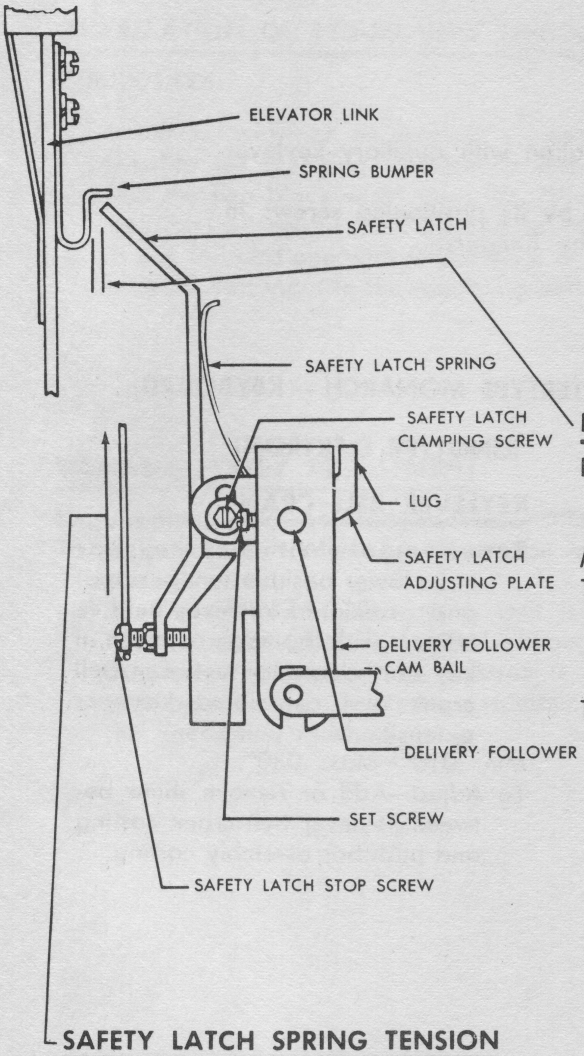


## ELEVATOR SAFETY LATCH STOP SCREW

**Requirement**—Some clearance between upper left edge of safety latch and vertical side of spring bumper (directly below stopping shoulder).

Max. .030".

To Check—Place delivery slide of the linecasting machine in its right position and hold elevator so that upper left edge of safety latch is opposite vertical side of spring bumper below shoulder but not touching spring bumper.

To Adjust—Position safety latch stop screw.

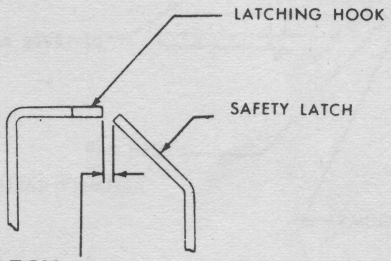


## SAFETY LATCH SPRING TENSION

**Requirement**—With elevator in its assembling position.

Min. 3 ozs.—Max. 5 ozs. to start safety latch moving.

To Adjust—Bow safety latch spring to left and downward with delivery follower cam bail shaft set screw loosened.

## SAFETY LATCH—

**Requirement**—Clearance between upper left edge of safety latch and tip of spring bumper.

Min. .015"—Max. .030".

To Check—Place delivery slide in left position and hold so that tip of spring bumper is opposite safety latch.

To Adjust—Position safety latch with its clamping screws loosened.

## INSTALLATION OF TOU 75-3 ON THE LINOTYPE "ELEKTRON" LINECASTING MACHINE

Mount the Operating Unit on the Elektron machine as follows:

Remove the two locking pins from the Operating Unit hangers. Place both arms under the operating unit, supporting it on the hands and forearms. Position operating unit so that the slides on the hangers will align with the slides on the keyboard. Slide the operating unit on to the keyboard until the grooves of the operating unit hangers line-up with the grooves on the keyboard slides and insert locking pins. Adjust the banking screws on the back of the operating unit hangers to just bank against the keyboard casting and tighten locknuts.

## OPERATING UNIT POSITION

**Requirement**—Keylever bell cranks should align with auxiliary keylever extensions.

To Adjust—Position the Operating Unit by its positioning screws in each hanger. If necessary reposition the hangers.

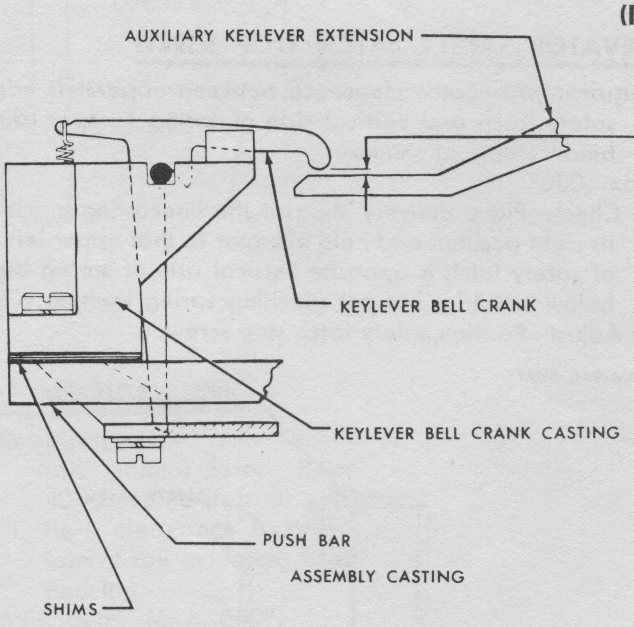


**(INTERTYPE MONARCH — KEYBOARD)**

**(LINOTYPE ELEKTRON)**

## KEYLEVER BELL CRANK

**Requirement**—With any key bar in its lower position (unoperated) and associated keylever held in contact with top edge of notch in key bar, clearance between bell crank and associated keylever extension.

Min. .010"—Max. .030".

To Adjust—Add or remove shims between keylever bell crank casting and push bar assembly casting.

## DELAY CONTROL MECHANISM (LINOTYPE ELEKTRON)

For proper Elektron operation it is necessary to provide a delay after each spaceband. This delay allows the spacebands to settle in the assembled line before it is delivered.

The delay is adjustable and will stop the Operating Unit for an interval of 25 to 80 Milliseconds after each spaceband is delivered. The control knob of the delay should be set for optimum operation on each "Elektron" Linecasting Machine.

## INSTALLATION OF 110-30 VOLT STEPDOWN TRANSFORMER (LINOTYPE ELEKTRON)

**P/N 201428**

Install transformer on interior surface of Elektron. Select location suitable for plugging transformer into 110AC outlet of Elektron.

Join the two black wires from the 30 volt side of transformer, to the Elektron harness for the six prong female Jones Plug. Connect one wire to pin #7 and one wire to pin #12 of this plug. This connection supplies 30 volt input to the operating unit Spaceband Delay Mechanism.

## VARIABLE PULLEY ADJUSTMENT (LINOTYPE ELEKTRON)

**Requirement**—The recommended Operating Unit speed is 620 OPM.

To Adjust—Loosen Allen Set Screw on variable pulley and adjust to proper speed.

NOTE—The TOU 75-3 Operating Unit is designed to be operated at speeds from 540 to 750 OPM. Although the recommended speed of the operating unit on the Elektron is 620 OPM the variable pulley may be adjusted for proper assembling and continuous operation of the linecasting machine.

# GENERAL LUBRICATION SPECIFICATIONS

Unless otherwise specified, one or two drops of oil at each of the places indicated will be sufficient. Use oil for lubrication at all of the places listed below, except where the use of grease is specified.
Oil both loops of all helical springs that exert a nominal tension of less than 2½ pounds. Apply grease to both loops of all helical springs that exert a nominal tension of 2½ pounds or more.
Cams—apply thin film of grease. Gears—apply thin film of grease.

**The following lubricants are suggested for use on all Teletypesetter equipment:**

**KS-7470 Oil, Part No. 88970—1 Qt.; Part No. 88971—1 Gal.**
**KS-7471 Grease, Part No. 88973—1 Lb.**

## INSTRUCTIONS FOR CLEANING AND LUBRICATING THE TELETYPESETTER T.O.U. 75 OPERATING UNIT

For best operating results, the Operating Unit should be thoroughly cleaned and lubricated approximately every month unless otherwise specified. To clean and lubricate individual assemblies the following procedure is recommended:

1. Remove Operating Unit covers.
   Remove driving belt.
   Disconnect electrical connectors at rear of unit.
   Back off knurled clamping screw mounted on keyboard base casting.
   Disconnect reed knife linkage at knife by removing snap ring.
   Remove pilot screw on each hanger.
   Remove Operating Unit from linecasting machine.
2. Remove selecting assembly as follows:
   Note—Remove only for servicing. To facilitate replacement and alignment of selecting assembly, make sure that rear stop rail and eccentric stop are not loosened, and are flush against selecting assembly.
   a. Remove two tight tape switch mounting bracket screws.
   b. Unhook two selecting assembly top plate springs.
   c. Remove two top plate bearings.
   d. Lift top plate off of selecting assembly and remove tape out contact assembly (with push pin) from bottom of selecting assembly top plate.
   e. Remove stop bail operating lever and link assembly by removing shoulder screw and unhooking link from tape feed stop bail. Retain all spacers used to position operating lever.
   f. Remove upper left hand screw of blocking arm extension and turn extension upward so that it will fully clear blocking arm latch when removing selecting assembly.
   g. With no tape in tape guide, rotate selector shaft 180° from its stop position. Remove three selecting assembly mounting screws, and front guide rail. Manually raise transfer bail as high as possible.
   h. Then raise selecting assembly until its base plate mounting screws clear base casting. Slide selecting assembly forward and to right as it is removed from Operating Unit.
3. Remove the two screws (8185) that mount bell crank assembly and remove bell crank assembly. (Care should be taken not to lose any of the shims that are located under each end of the bell crank assembly, and to replace these shims as originally installed when replacing the bell crank assembly.)
4. Remove the four screws (8185) from bottom of base casting that mount push bar assembly. (Do not remove assembly at this time.)
5. Remove right and left hand hangers.
6. Remove the screw (6745) that mounts coupling sleeve (85463), and slide coupling sleeve out of engagement.
7. Remove push bar assembly by lifting upward.

The individual parts and assemblies should be cleaned and the excessive oil removed. Carbon tetrachloride or other non-inflammable cleaning fluid may be used for cleaning.

*(Continued on next page)*

# GENERAL LUBRICATION SPECIFICATIONS *(Continued)*

After cleaning and lubricating the assemblies of the T.O.U. 75 Operating Unit, the procedure for reassembling is as follows:

1. Replace push bar assembly on base casting so that code bars are located over respective "T" levers of 2nd transfer.
2. Engage coupling sleeve (85463) with right hand operating bail cam, and replace screw (6745).
3. Replace the four screws (8185) that mount push bar assembly to base casting.
4. Replace right and left hand hangers.
5. Replace bell crank assembly and shims.
6. Replace selecting assembly as follows:
   With depressing bail roller and push bars on high part of respective cams, move code bars and block bar with their extensions to the left position. Rotate selector shaft approximately 180° from its stop position, and latch tape feed stop bail with delay feed pawl and retaining pawl disengaged from their respective ratchets. Manually hold the transfer bail in its operated position and replace the selecting assembly. Mount the front stop rail, replace stop bail operating lever and link assembly, replace tape out contact assembly on top plate, and remount top plate assembly. Replace tight tape switch bracket.

**CHECK THE FOLLOWING ADJUSTMENT:**

RATCHET BEARING BRACKET

Requirement—with depressing bail roller on low part of its cam, no tape in tape guide, and tape feed stop bail in unoperated position, delay push bail adjusting screw should align with delay selector lever. Minimum clearance between delay retaining pawl and delay retaining ratchet, but not less than 0.010 inch.

To adjust—Position bracket with its mounting screws loosened.

Note: Delay feed pawl should move freely in delay guide clamp plate. Right edge of bracket to be parallel with right edge of selecting assembly base.

7. Mount Operating Unit on linecasting machine.
   Remove two hanger pilot screws from Operating Unit.
   Back off knurled clamp screw mounted on keyboard base casting and two stop screws projecting from left hanger.
   a. Raise assembling elevator to its mid-position where it will be supported by elevator latch.
   b. Place both arms under Operating Unit, supporting it on the hands and forearms. Position unit under keyboard so that openings in hangers will align with hanger guides and slide in place. Insert hanger pilot screws.
   c. Keylever bell cranks should align with keylever extensions. extensions.
      To adjust—position Operating Unit by its stop screws and clamp screw.
8. Replace covers.

# BASE ASSEM

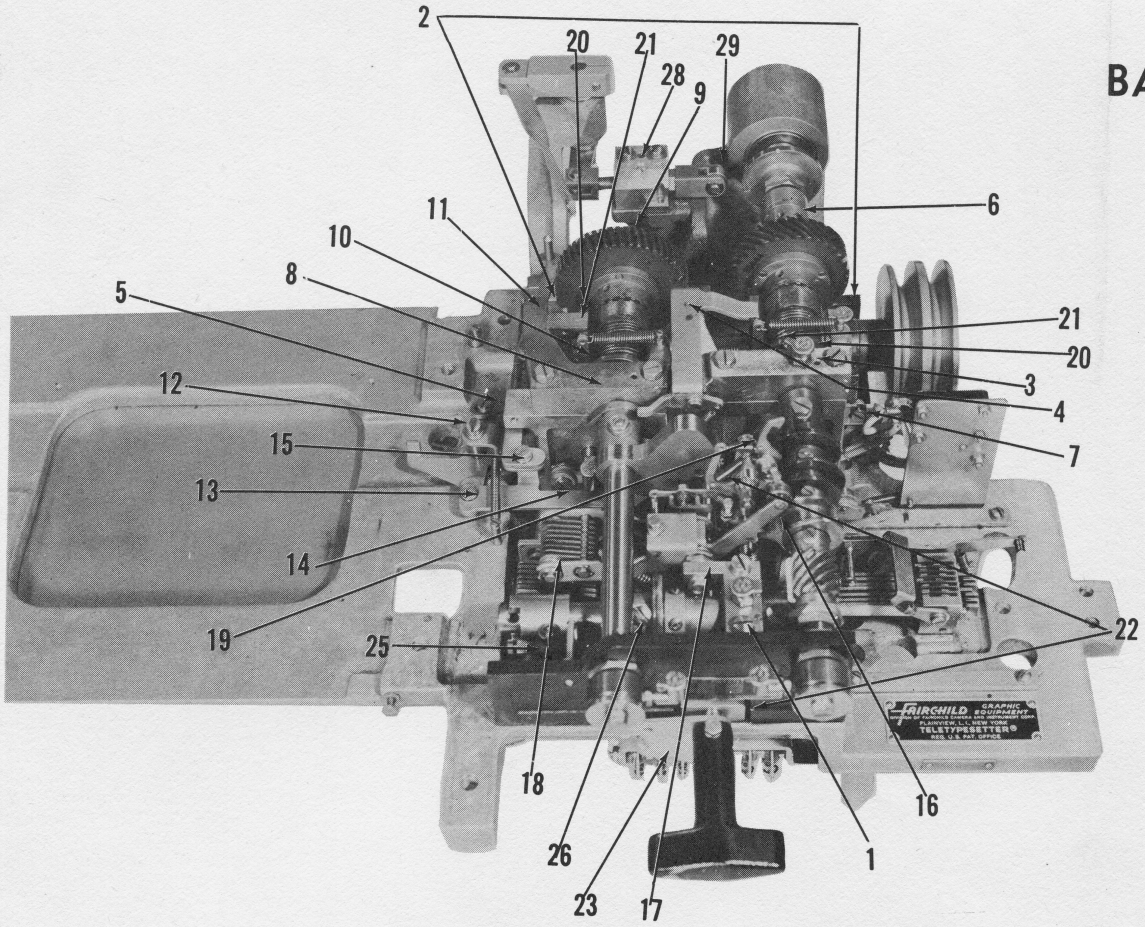


## PUSH BAR ASSEMBLY

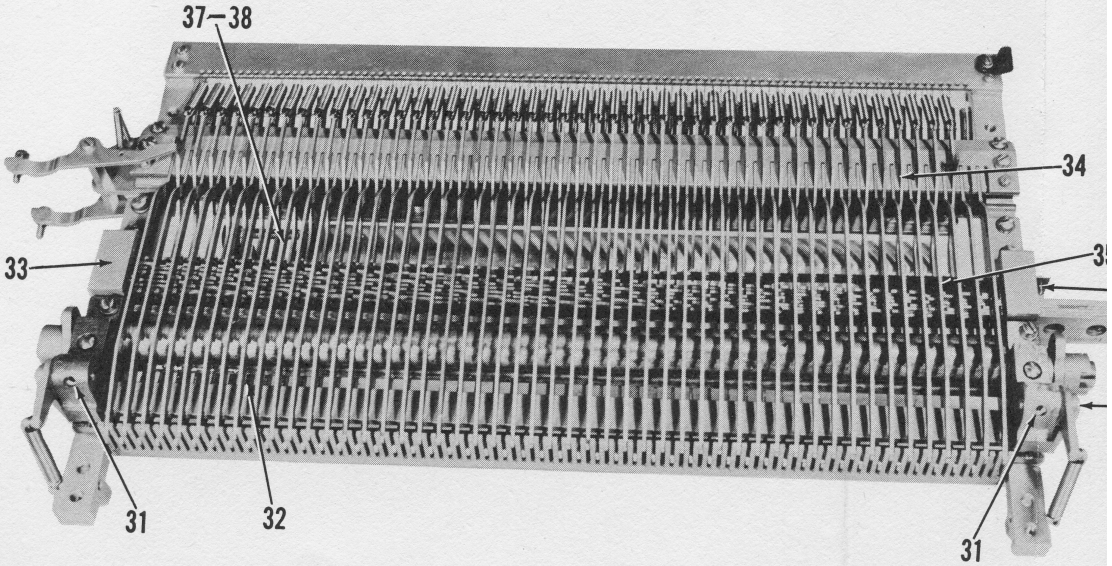


1. Spreader Co
2. Pulley Shaft
3. Selector Sha
4. Selector Clu
5. Selector Clu
6. Selector Sha
7. Helper Cam
8. Elevator Sha
9. Elevator Sha
10. Elevator Clu
11. Elevator Clu
12. Elevator Bell
13. Elevator Bell
14. Elevator Bell
15. Floating Lev
16. Second Tran
17. Second Tran
18. Second Tran
19. Clutch Throw
20. Clutch Deten
21. Clutch Deten
22. Manual Cont
23. Manual Cont
24. Manual Rese
25. Depressing B
26. Depressing B
27. Depressing A
28. Unlatching L
29. Unlatching Li

30. Operating Ba
31. Spreader Car
32. Spreader Car
33. Code Bars—A
34. Push Bars—O
35. Shift Bell Cra
36. Shift Link Piv
37. Shift Latch Pi
38. Yield and Shi

# BASE ASSEMBLY

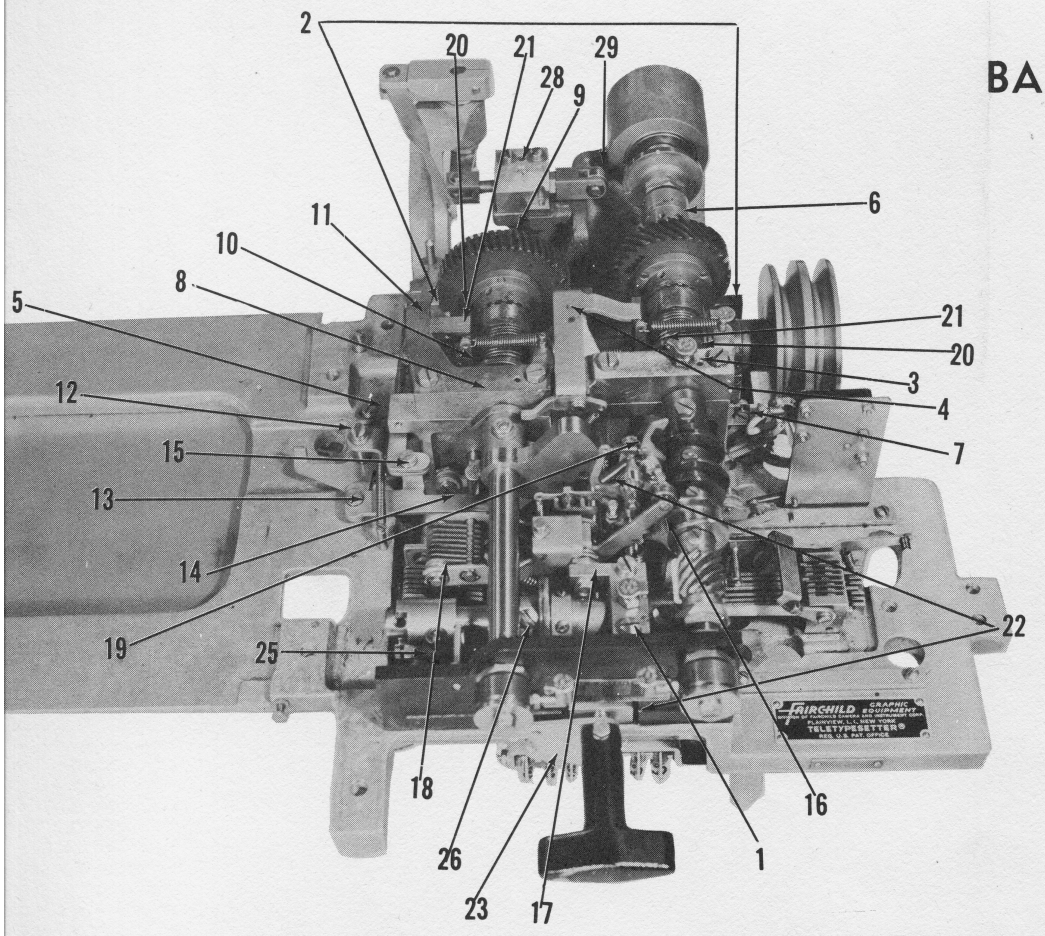


1. Spreader Cam Drive Shaft Right Bearing—Fill C
2. Pulley Shaft Bearing—Fill Two Oil Cups
3. Selector Shaft Bearing—Fill Oil Cups and Oil H
4. Selector Clutch Release Bail Bearing—Two Place
5. Selector Clutch Reset Link Bearing—Two Places
6. Selector Shaft Gear Lubricating Felt
7. Helper Cam Roller and Guide Slot
8. Elevator Shaft Bearing—Fill Oil Cup and Oil Ho
9. Elevator Shaft Clutch—Remove Oil Retaining Nu
10. Elevator Clutch Reset Lever Roller Bearing
11. Elevator Clutch Throwout Lever Latch Bearing—
12. Elevator Bell Crank Pivot Screw
13. Elevator Bell Crank Latching Link Pivot Screw a
14. Elevator Bell Crank Latch Pivot Screw
15. Floating Lever Pivot Screw
16. Second Transfer Cam Roller
17. Second Transfer Pivot Screw
18. Second Transfer Guide Plates
19. Clutch Throwout Lever Shaft—Fill Two Oil Cups
20. Clutch Detent Lever Bearings
21. Clutch Detent Lever Cam Roller Bearings
22. Manual Control Shaft Bearing (Reset Cam)—Two
23. Manual Control Detent Plunger
24. Manual Reset Cam Roller
25. Depressing Bail Bearing
26. Depressing Bail Roller Bearing
27. Depressing Arm Bearing and Guide Slot (See C
28. Unlatching Link Bearing Oil Hole
29. Unlatching Link Cam Roller

# PUSH BAR ASSEMBLY

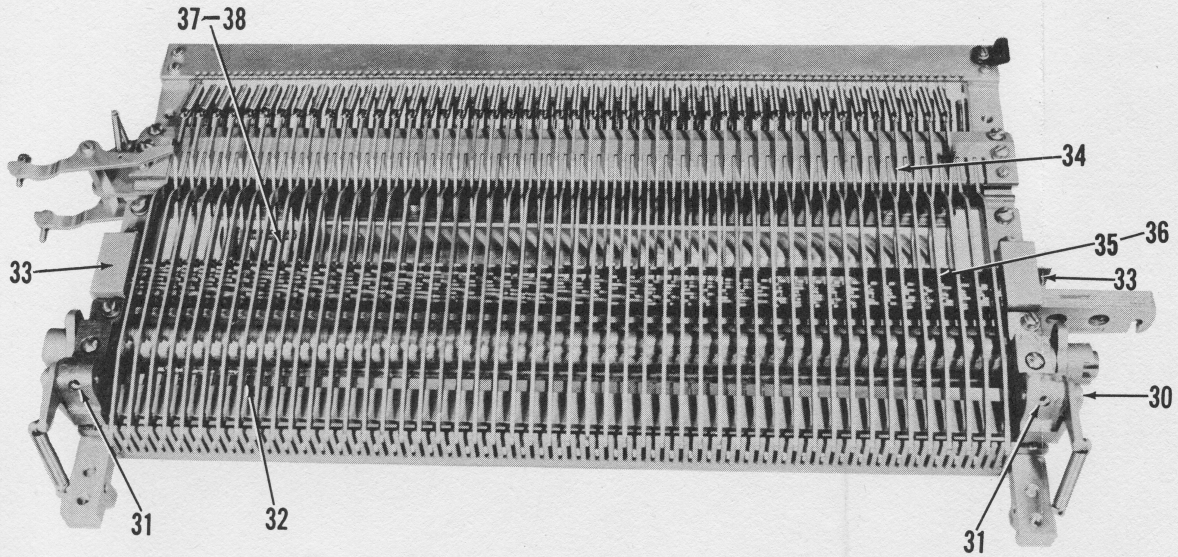


30. Operating Bail Roller Arm Pivot Screws—Two Pl
31. Spreader Cam Bearings—Fill Oil Hole, Two Plac
32. Spreader Cam—Saturate Felt With Oil
33. Code Bars—At Guide Blocks
34. Push Bars—Oil Sparingly At Fulcrum Rod
35. Shift Bell Crank Pivot Screws
36. Shift Link Pivot Screws—Each End
37. Shift Latch Pivot Screw
38. Yield and Shift Lever Pivot Screw

# BASE ASSEMBLY




1. Spreader Cam Drive Shaft Right Bearing—Fill Oil Cup
2. Pulley Shaft Bearing—Fill Two Oil Cups
3. Selector Shaft Bearing—Fill Oil Cups and Oil Hole
4. Selector Clutch Release Bail Bearing—Two Places
5. Selector Clutch Reset Link Bearing—Two Places
6. Selector Shaft Gear Lubricating Felt
7. Helper Cam Roller and Guide Slot
8. Elevator Shaft Bearing—Fill Oil Cup and Oil Hole
9. Elevator Shaft Clutch—Remove Oil Retaining Nut and Fill Shaft
10. Elevator Clutch Reset Lever Roller Bearing
11. Elevator Clutch Throwout Lever Latch Bearing—Two Places
12. Elevator Bell Crank Pivot Screw
13. Elevator Bell Crank Latching Link Pivot Screw and Guide—Two Places
14. Elevator Bell Crank Latch Pivot Screw
15. Floating Lever Pivot Screw
16. Second Transfer Cam Roller
17. Second Transfer Pivot Screw
18. Second Transfer Guide Plates
19. Clutch Throwout Lever Shaft—Fill Two Oil Cups
20. Clutch Detent Lever Bearings
21. Clutch Detent Lever Cam Roller Bearings
22. Manual Control Shaft Bearing (Reset Cam)—Two Places
23. Manual Control Detent Plunger
24. Manual Reset Cam Roller
25. Depressing Bail Bearing
26. Depressing Bail Roller Bearing
27. Depressing Arm Bearing and Guide Slot (See Contact Assem.)
28. Unlatching Link Bearing Oil Hole
29. Unlatching Link Cam Roller

30. Operating Bail Roller Arm Pivot Screws—Two Places
31. Spreader Cam Bearings—Fill Oil Hole, Two Places
32. Spreader Cam—Saturate Felt With Oil
33. Code Bars—At Guide Blocks
34. Push Bars—Oil Sparingly At Fulcrum Rod
35. Shift Bell Crank Pivot Screws
36. Shift Link Pivot Screws—Each End
37. Shift Latch Pivot Screw
38. Yield and Shift Lever Pivot Screw

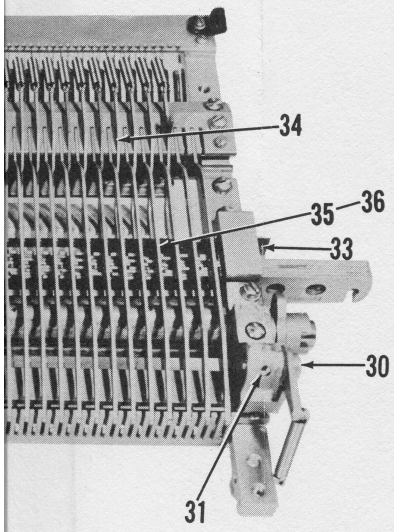


# SELECTING ASSEM

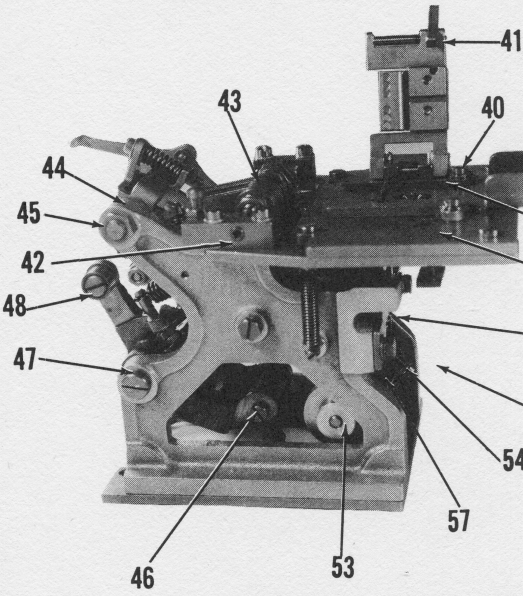


40. Tape Retaining Lid Bearing—Two
41. Tape Retaining Lid Latch
42. Top Plate Bearing—Two Places
43. Selector Lever Bearing Shaft—Sev
44. Selector Lever Bail—Two Places
45. Selector Lever Bail Cam Roller Be
46. Transfer Levers Bearing Shaft—Se
47. Transfer Bail Bearings—Three Oil
48. Transfer Bail Cam Roller Bearing
49. Tape Feed Wheel Bearing—Two P
50. Tape Feed Pawl Bearing
51. Tape Feed Lever Bearings
52. Tape Feed Lever Extension Roller
53. Delay Feed Ratchet Shaft Bearing
54. Delay Feed Ratchet—Oil Teeth Sp
55. Delay Retaining Ratchet—Oil Teet
56. Delay Retaining Pawl Bearing
57. Delay Push Bail Bearings—Two Pl
58. Delay Feed Pawl Bearing
59. Delay Feed Lever Bearings

# BELL CRANK ASSEMBLY

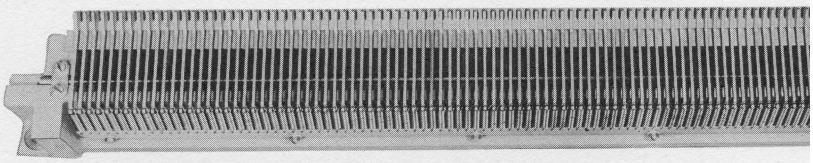

39. Key Lever Bell Cranks—Remove and Wipe with Cloth Dampened Slightly w

# LUBR

ring—Fill Oil Cup
ps
and Oil Hole
—Two Places
wo Places

and Oil Hole
taining Nut and Fill Shaft
aring
Bearing—Two Places

ot Screw and Guide—Two Places

Oil Cups

ings
Cam)—Two Places

Slot (See Contact Assem.)

ws—Two Places
e, Two Places
il

Rod

## SELECTING ASSEMBLY

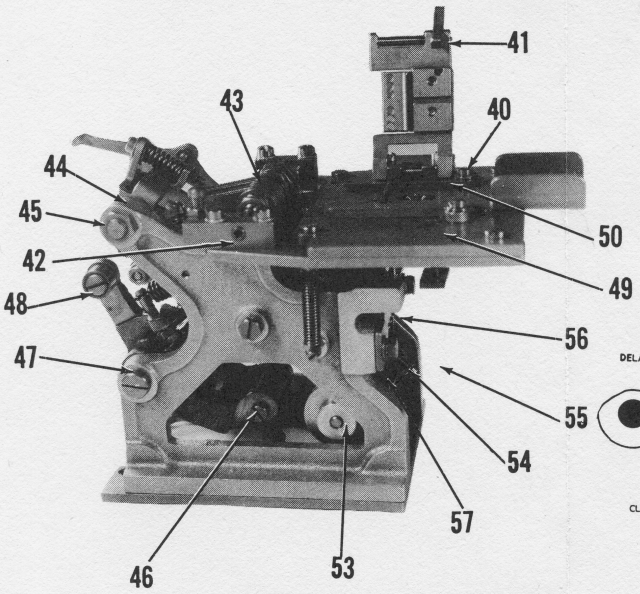


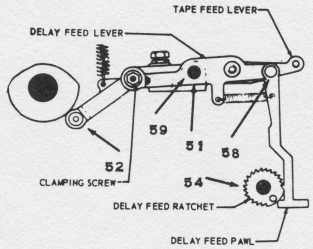


62

40. Tape Retaining Lid Bearing—Two Places
41. Tape Retaining Lid Latch
42. Top Plate Bearing—Two Places
43. Selector Lever Bearing Shaft—Seven Places
44. Selector Lever Bail—Two Places
45. Selector Lever Bail Cam Roller Bearing
46. Transfer Levers Bearing Shaft—Seven Places
47. Transfer Bail Bearings—Three Oil Holes
48. Transfer Bail Cam Roller Bearing
49. Tape Feed Wheel Bearing—Two Places
50. Tape Feed Pawl Bearing
51. Tape Feed Lever Bearings
52. Tape Feed Lever Extension Roller
53. Delay Feed Ratchet Shaft Bearing
54. Delay Feed Ratchet—Oil Teeth Sparingly
55. Delay Retaining Ratchet—Oil Teeth Sparingly
56. Delay Retaining Pawl Bearing
57. Delay Push Bail Bearings—Two Places
58. Delay Feed Pawl Bearing
59. Delay Feed Lever Bearings

REPEA

## BELL CRANK ASSEMBLY

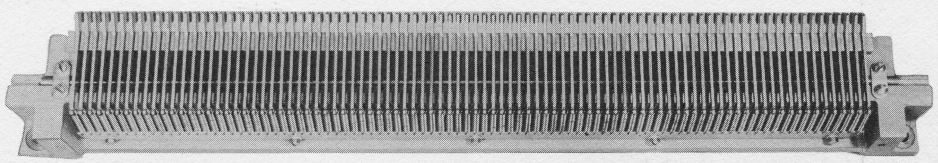

39. Key Lever Bell Cranks—Remove and Wipe with Cloth Dampened Slightly with Oil

# LUBRICATION CHART

## ASSEMBLY

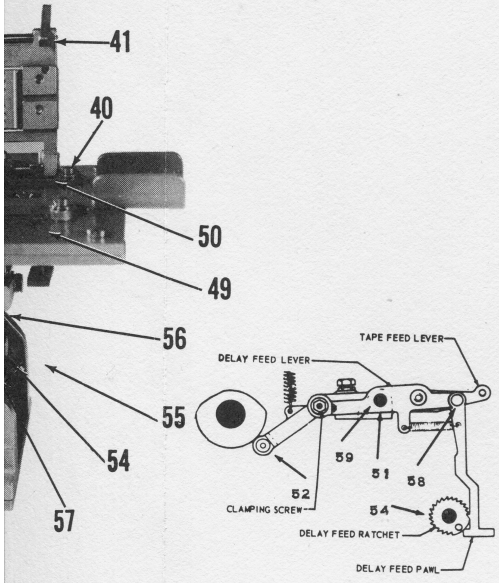


d Bearing—Two Places
id Latch
—Two Places
aring Shaft—Seven Places
l—Two Places
l Cam Roller Bearing
aring Shaft—Seven Places
ings—Three Oil Holes
Roller Bearing
Bearing—Two Places
earing
earings
xtension Roller
t Shaft Bearing
t—Oil Teeth Sparingly
atchet—Oil Teeth Sparingly
awl Bearing
arings—Two Places
earing
Bearings

## LY

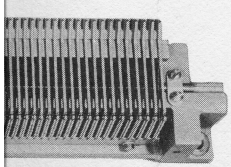

ned Slightly with Oil

## CONTACT ASSEMBLY

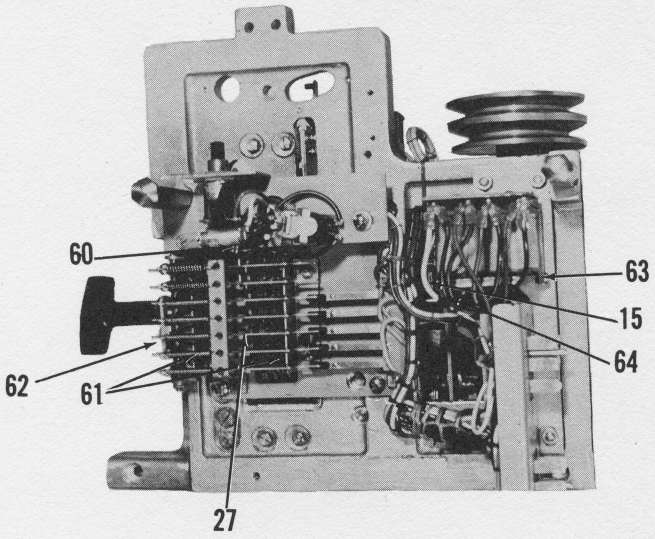


60. Tape Feed Stop Bail Operating Lever—Shoulder Screw Two Places
61. Code Levers—Both Sides of Each Lever at Guide Slot
62. Code Lever Bearing—Seven Places
63. Clutch Magnet Armature Pivot Screws—Two Places
64. Clutch Magnet Armature Connecting Link—Two Places

## REPEAT CHARACTER DELAY MECHANISM

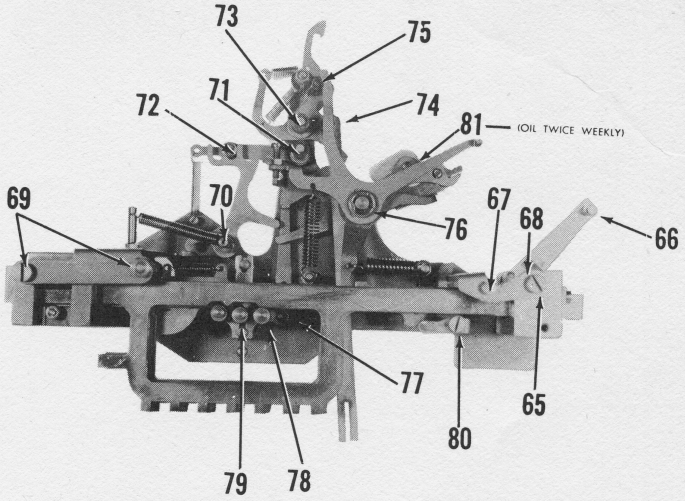


65. Tape Feed Stop Bail Bearings—Two Places
66. Tape Feed Stop Bail Arm Roller
67. Tape Feed Stop Bail Link (Both Ends)
68. Code Bar Extension—At Guide Blocks
69. Code Bar Extension Detent—Two Pivot Screw and Detent Rollers
70. Repeat Blocking Arm Bearing
71. Repeat Blocking Arm Detent Bearing
72. Repeat Blocking Arm Detent Roller Bearing
73. Blocking Arm Latch Release Arm
74. Latch Blocking Lever—At Riveted Joint
75. Tape Feed Blocking Arm Latch—At Guide Post and Hub
76. Delay Cam Follower Arm Assembly Hub—Front and Rear
77. Function Blocking Arm Bearing
78. Function Blocking Arm Code Sensing Roller Shaft—Rear End of Shaft
79. Function Blocking Arm Code Sensing Rollers and Slide
80. Tape Feed Stop Bail Latch
81. Delay Cam Follower Roller Lubricating Felt—Twice Weekly