TELETYPESETTER®

BULLETIN 10B

ADJUSTMENTS and LUBRICATION for the UNIVERSAL OPERATING UNIT

FAIRCHILD GRAPHIC EQUIPMENT
FAIRCHILD DRIVE, PLAINVIEW, L. I., NEW YORK

TELETYPESETTER®

BULLETIN 10B

ADJUSTMENTS and LUBRICATION for the UNIVERSAL OPERATING UNIT



DIVISION OF
FAIRCHILD CAMERA AND INSTRUMENT CORP

Copyright 1958 by Fairchild Camera and Instrument Corp.
Copyright in all countries participating in International Convention and Pan American Conventions. All rights reserved including rights of translations into all languages.

Printed in U.S.A.

INTRODUCTION

The maintenance of Teletypesetter equipment requires a certain amount of mechanical ability and, therefore, should only be attempted by personnel who have this ability.

Fairchild Graphic Equipment maintains a school for the purpose of training our customers' personnel in the maintenance of Teletypesetter equipment and it is strongly recommended that all personnel assigned to the maintenance of Teletypesetter equipment attend the complete course; there is no tuition charge for this service.

This Bulletin is meant to supplement, not to replace, the maintenance training which is available at the Teletypesetter school.

LIST OF EFFECTIVE PAGES

JANUARY, 1962

Page Number	Change In Effect
TITLE PAGE	ORIGINAL
A to G	CHANGE 1
H	ORIGINAL
1-26	ORIGINAL
27	CHANGE 1
28-43	ORIGINAL
44-46	CHANGE 1

The above list indicates the effective pages as of the date of issue. When a change takes place in any of the following pages, this page likewise changes.

Page

1. **GENERAL DESCRIPTION** ..... E

2. **ADJUSTMENTS**

a. GENERAL ..... F

b. INSTRUCTIONS

(1) Removing Operating Unit From Linecasting Machine ..... F

(2) Removing Selecting Assembly 6

(3) Removing Code Lever And Contact Assembly 11

(4) Replacing Code Lever And Contact Assembly 13

(5) Replacing Selecting Assembly 17

(6) Replacing Tape Feed Stop Bail Operating Lever And Link 19

(7) Mounting Operating Unit On Linecasting Machine 33

c. OPERATING UNIT

Auxiliary Keylever Guide Comb 34

Blocking Arm Latch 28

Clutch Magnet Coil 30

Clutch Magnet Unit Mounting Plate 30

Code Bar Extension Detent 7

Code Bar Extension Detent Adjusting Screw 30

Code Bar Extension Detent Roller 1

Code Bar Extension Guide 8

Code Bar Extension Retaining Plate 7

Code Bar Guides 2

Code Lever And Function Contacts 31

Contact Pin Guide 18

Delay Cam Follower Arm Roller 12

Delay Cam Follower Arm Shim 43

Delay Feed Pawl Operating Lever 26

Delay Push Bail Adjusting Screw 26

Delay Selector Lever Operating Arm 29

Delay Selector Lever Operating Arm Stop 29

Delivery Slide Arm Follower 42

Delivery Slide Fork 38

Delivery Slide Fork Floating Lever Eccentric 38

Depressing Bail Bearing Bracket 13

Depressing Bail Roller Bracket Shims 13

Drive Shaft Bearing 6

Drive Shaft Collar 6

Drive Shaft Gear Play 6

Elevator Arm Shaft 36

Elevator Arm Shaft End Nuts 37

	Page
Elevator Bell Crank Latching Link Backstop Screw	10
Elevator Bell Crank Latch Bracket	10
Elevator Cam Roller Casting Adjusting Screw	36
Elevator Clutch Reset Lever Adjusting Screw	16
Elevator Handle and Cam Roller	37
Elevator Safety Latch Stop Screw	42
Feed Wheel Detent	20
Function Blocking Arm Position	12
Keylever Bell Crank	35
Keylever Bell Crank Stop	5
Latch Release Arm Shims	43
Lateral Rail Cap	41
Lateral Rail Stop Screw	41
Lock Slide Wedge	34
Lower Rail Push Bar Lever Screw	40
Operating Unit Position	33
Pulley Shaft Bearing	14
Ratchet Bearing Bracket	25
Retaining Lid Latch Wearing Strip	18
Retaining Lid Plate	20
Repeat Blocking Arm Detent Shims	43
Repeat Blocking Arm Shims	43
Safety Latch	42
Selector and Elevator Shaft Clutch	14
Selector and Elevator Shaft End Play	9
Selecting Assembly	22
Selector Clutch Reset Link Eccentric	15
Selector Clutch Throwout Lever Adjusting Screw	15
Selector Lever Bail Adjusting Screw	21
Selector Trip Arm Extension	37
Shift Latch	5
Shift Lever Adjusting Screw	4
Spreader Cam Shaft Bearing	3
Spreader Cam Shaft Timing	17
Stop Rail	17
Tape Feed Lever Adjusting Screw	23
Tape Feed Blocking Arm Lower Extension	27
Tape Feed Blocking Arm Upper Extension	28
Tape Feed Stop Bail Operating Lever	19
Tape Feed Stop Bail Operating Lever Eccentric	24

Page

Tape-Out Contact 18
Tape Guide 20
Tape Space 20
Tight Tape Switch Assembly 35
Timing Cam Assembly 32
Timing Cam Contact Assembly 32
Timing Cam Contact Gap 32
Time Delay 27
Timing Hub Position 25
Top Plate 20
Top Plate Guide Nut 20
Top Plate Upstop Screw 19
Transfer Bail Adjusting Screw 22
Transfer Bail Eccentric Shaft 21
Upper Rail Push Bar Lever Screw 40
Vertical Link 41

d. PROPOSED ADJUSTMENT SEQUENCE ..... G-H

3. SPRING TENSIONS

Blocking Arm Latch 29
Block Bar Extension Pawl 1
Code Bar Extension Detent 7
Code Lever 31
Delay Cam Follower Arm 12
Delay Feed Pawl 26
Delay Retaining Pawl 25
Delay Selector Lever Operating Arm 29
Delivery Slide Bar 38
Depressing Bail 13
Elevator Bell Crank 11
Elevator Bell Crank Latch 10
Elevator Clutch Throwout Lever Latch 16
Elevator Counterbalance 38
Elevator Safety 39
Feed Wheel Detent 19
Keylever Bell Crank 2
Latch Release Arm 29
Lateral Rail 41
Lateral Rail Manual Lever Detent 40
Lower Push Bar 2
Operating Bail Roller Arm 3
Repeat Blocking Arm Detent 7
Safety Latch 42

Page

Selector and Elevator Clutch 16
Selector and Elevator Clutch Detent 11
Selector and Elevator Clutch Throwout Lever 16
Selector Clutch Release Bail 15
Selector Lever Bail 23
Selector Lever Bail Yield 23
Selector Lever 23
Selector Trip Arm Detent 39
Shift Latch 4
Shift Lever 4
Stop Arm 27
Tape Feed Lever 23
Tape Feed Lever Extension 27
Tape Feed Pawl 18
Tape Feed Stop Bail 24
Tape Feed Stop Bail Latch 24
Timing Cam Contact 32
Top Plate 19
Transfer Bail 22
Transfer Bail Yield 21
Upper and Lower Rail Push Bar 5
Upper Push Bar 2
Vertical Link 40
Yield Lever 4

4. LUBRICATION ..... 44, 45 & 46

1. GENERAL DESCRIPTION

The Universal Teletypesetter operating unit was developed to operate a linecasting machine that is capable of producing twelve pica slugs at a rate of twelve lines per minute or longer lines, at a proportionate rate. However, the unit may be operated at slower speeds to accommodate lower speed linecasting machines. A six-unit fully perforated tape is the medium of control.

Functionally the operating unit performs as follows: operates the required keylevers and the assembling elevator ; controls the upper and lower rail (duplex rail) position; provides for the necessary delay of tape feeding during the positioning of the duplex rail; automatically recognizes a repeat character or digit and provides a one-cycle delay between each repeated character; operates electrical contacts that may be connected with the timing cam contacts to provide regulated pulses for the control of auxiliary circuits; and provides an electrically operated safety feature for idling the machine in case the perforated tape ends, becomes taut or in the event that certain conditions arise in the linecasting machine.

The perforator operator may justify certain short lines by back spacing the tape and perforating the 0-Code (thin-space) in each space band (3-Code) perforation to increase the spacing between words. When the 0-3 combination is sensed by the operating unit, the add-thin space feature functions to drop the space band and the thin space matrices in sequence.

Manual operation(of the keylevers)may be selected at will by moving the control lever handle located at the right of the unit to its vertical position. Thus, control of the machine by the perforated tape may be halted so that the text may be inspected, corrected or expanded.

The code combination for the various functions and characters are shown in the figure below.

668 TS

| SHIFT / Unshift | Tape Feed | T / t | Return | O / o | Space Band | N / n | H / h | M / m | Elevate | I / i | R / r | C / c | L / l | P / p | G / g | V / v | E / e | A / a | S / s | U / u | D / d | J / j | F / f | K / k | Z / z | W / w | Y / y | Q / q | B / b | Shift | X / x | Unshift | Thin Space | ½ / ? | P.F. or L.M. | ! | Add-Thin Space | Em Space | – / 8 | & / 7 | ¼ / 9 | @ / - | ½ / 4 | * | Bell | Comma | Quad Left | En Space | Q.R. or U.M. |) / 5 | (/ V Rule | Em Sp. / 2 | ¼ / 3 | Em Leader / 6 | ¾ / 0 | ? / 1 | En Leader | @ / 9 | £ / f | Upper Rail | ' / , | Lower Rail | Period | ⅛ / . | Quad Center | Rub Out |
|---|---|---

2. ADJUSTMENTS

a. GENERAL

(1) The sequence in which the following adjustments are arranged takes into consideration the normal approach to the mechanism and the fact that a change in one adjustment may affect others. Adjustments should not be disturbed unnecessarily. After performing any adjustment, check related adjustments.

NOTE: In all the figures of this bulletin, fixed pivot points are designated by solid black circles. A cycle refers to the sequence of movements of associated mechanisms during one complete revolution of the selector shaft. In the following text, the terms, left, right, front, rear, upper, and lower, refer to the normal position of the operating unit as viewed from the front, when installed on the linecasting machine.

CAUTION: Do not rotate the pulley or elevator shaft counterclockwise with the timing cam contact assembly in place. The contact operating pins may be damaged by the reversed operation.

(2) When it is necessary to remove the operating unit from the slug linecasting machine for servicing, proceed as follows:

b. INSTRUCTIONS

(1) REMOVING THE OPERATING UNIT FROM THE LINECASTING MACHINE

Remove the driving belt.

Disconnect the electrical connectors at the rear of the unit. (p. 30)

Remove the top bell crank cover and the top right end cover.

Disconnect the (elevator) yield-handle switch cable terminals from the terminal block.

Back off the knurled clamping screw mounted on the keyboard base casting. (p. 33)

Remove the pilot screw on each hanger. (p. 33)

Remove the operating unit from the slug linecasting machine.

PROPOSED ADJUSTMENT SEQUENCE FOR UNIVERSAL OPERATING UNIT

This proposed adjustment sequence is recommended when complete readjustment of the Universal Operating Unit is required.

ADJUSTMENT NUMBER	DESCRIPTION OF ADJUSTMENT	PAGE NUMBER	RELATED ADJUSTMENT
1	Keylever Bell Crank Spring Tension	2	
2	Upper Push Bar Spring Tension	2	
3	Code Bar Guides	2	
4	Lower Push Bar Spring Tension	2	
5	Spreader Cam Shaft Bearing	3	
6	Operating Bail Roller Arm Spring Tension	3	
7	Yield Lever Spring Tension	4	
8	Shift Lever Spring Tension	4	
9	Shift Latch Spring Tension	4	
10	Shift Lever Adjusting Screw	4	
11	Shift Latch	5	
12	Upper and Lower Rail Push Bar Lever Spring Tension	5	
13	Keylever Bell Crank Stop	5	
	Instructions for Removing the Selecting Assembly	6	
14	Drive Shaft Bearing	6	
15	Drive Shaft Collar	6	
16	Drive Shaft Gear Play	6	
17	Selector and Elevator Shaft Clutch	14	
18	Pulley Shaft Bearing	14	
19	Selector and Elevator Shaft End Play	9	
20	Elevator Bell Crank Latch Bracket	10	23-24
21	Elevator Bell Crank Latch Spring Tension	10	
22	Elevator Bell Crank Latching Link Back Stop Screw	10	
23	Selector Clutch Reset Link Eccentric	15	24
24	Selector Clutch Throwout Lever Adjusting Screw	15	
25	Selector Clutch Release Bail Spring Tension	15	
26	Elevator Clutch Reset Lever Adjusting Screw	16	
27	Elevator Clutch Throwout Lever Latch Spring Tension	16	
28	Selector and Elevator Clutch Throwout Lever Spring Tension	16	
29	Selector and Elevator Clutch Spring Tension	16	
30	Selector and Elevator Clutch Detent Spring Tension	11	
31	Elevator Bell Crank Spring Tension	11	
32	Code Bar Extension Guide	8	35-87-92
	Instructions for Removing Code Lever and Contact Assembly	11	
33	Function Block Arm Position	12	
34	Delay Cam Follower Arm Spring Tension	12	
35	Delay Cam Follower Arm Roller	12	87-92
36	Code Bar Extension Detent End Play	1	
37	Code Bar Extension Detent Roller	1	
38	Block Bar Extension Pawl Spring Tension	1	
	Instructions for Replacing the Code Lever and Contact Assembly	13	39-40
39	Depressing Bail Bearing Bracket	13	
40	Depressing Bail Roller Bracket Shims	13	
41	Depressing Bail Spring Tension	13	
42	Code Bar Extension Detent	7	93
43	Repeat Blocking Arm Detent Spring Tension	7	
44	Code Bar Extension Detent Spring Tension	7	
45	Code Bar Extension Retaining Plate	7	
	Instructions for Replacing the Selecting Assembly	17	
46	Stop Rail	17	
47	Spreader Cam Shaft Timing	17	
48	Contact Pin Guide	18	
49	Tape-Out Contact	18	
50	Retaining Lid Latch Wearing Strip	18	

ADJUSTMENT NUMBER	DESCRIPTION OF ADJUSTMENT	PAGE NUMBER	RELATED ADJUSTMENT
51	Tape Feed Pawl Spring Tension	18	
52	Top Plate Spring Tension	19	
53	Top Plate Upstop Screw	19	
54	Feed Wheel Detent Spring Tension	19	
55	Tape Feed Stop Bail Operating Lever	19	
56	Tape Space	20	
57	Top Plate	20	71-84-86
58	Retaining Lid Plate	20	
59	Top Plate Guide Nut	20	58
60	Feed Wheel Detent	20	71-84-86
61	Tape Guide	20	71-84-86
62	Transfer Bail Yield Spring Tension	21	
63	Selector Lever Bail Adjusting Screw	21	64-65-66
64	Transfer Bail Eccentric Shaft	21	65-66
65	Selecting Assembly	22	63-64-66-71 79-81-84-86
66	Transfer Bail Adjusting Screw	22	
67	Transfer Bail Spring Tension	22	
68	Selector Lever Bail Yield Spring Tension	23	
69	Selector Lever Bail Spring Tension	23	
70	Selector Lever Spring Tension	23	
71	Tape Feed Lever Adjusting Screw	23	84-86
72	Tape Feed Bail Spring Tension	23	
73	Tape Feed Stop Bail Operating Lever Eccentric	24	
74	Tape Feed Stop Bail Spring Tension	24	
75	Tape Feed Stop Bail Latch Spring Tension	24	
76	Ratchet Bearing Bracket	25	77-79-81
77	Delay Retaining Pawl Spring Tension	25	
78	Timing Hub Position	25	
79	Delay Feed Pawl Operating Lever	26	81
80	Delay Feed Pawl Spring Tension	26	
81	Delay Push Bail Adjusting Screw	26	
82	Time Delay Adjustment	27	
83	Stop Arm Spring Tension	27	
84	Tape Feed Blocking Arm Lower Extension	27	86
85	Tape Feed Lever Extension Spring Tension	27	
86	Tape Feed Blocking Arm Upper Extension	28	
87	Blocking Arm Latch	28	
88	Blocking Arm Latch Spring Tension	29	
89	Latch Release Arm Spring Tension	29	
90	Delay Selector Lever Operating Arm	29	
91	Delay Selector Lever Operating Arm Spring Tension	29	
92	Delay Selector Lever Operating Arm Stop	29	
93	Code Bar Extension Detent Adjusting Screw	30	
94	Clutch Magnet Coil	30	
95	Clutch Magnet Unit Mounting Plate	30	
96	Code Lever and Function Contacts	31	
97	Code Lever Spring Tension	31	73
98	Timing Cam Assembly	32	
99	Timing Cam Contact Assembly	32	
100	Timing Cam Contact Gap	32	
101	Timing Cam Contact Spring Tension	32	
102	Tight Tape Switch Assembly	35	
103	Delay Cam Follower Arm Shim	43	
104	Repeat Blocking Arm Shim	43	
105	Repeat Blocking Arm Detent Shim	43	
106	Latch Release Arm Shim	43	

Lubricate as specified on Pages 44, 45 and 46

NOTE—To facilitate adjustment of requirements on Pages 1 to 9, remove elevator shaft.

Procedure—1. Remove timing cam contact bracket (Page 32).
2. Remove elevator cam mounting screw.
3. Trip elevator throwout lever latch (Page 16) and rotate shaft so that clutch stop lug (Page 16) is up.
4. Unhook detent spring (Page 11).
5. Remove screw, elevator thrust washer, and shims (Page 9).
6. Slide shaft out at rear.

Omit elevator shaft requirements until other adjustments (preceding top of Page 14) are completed.

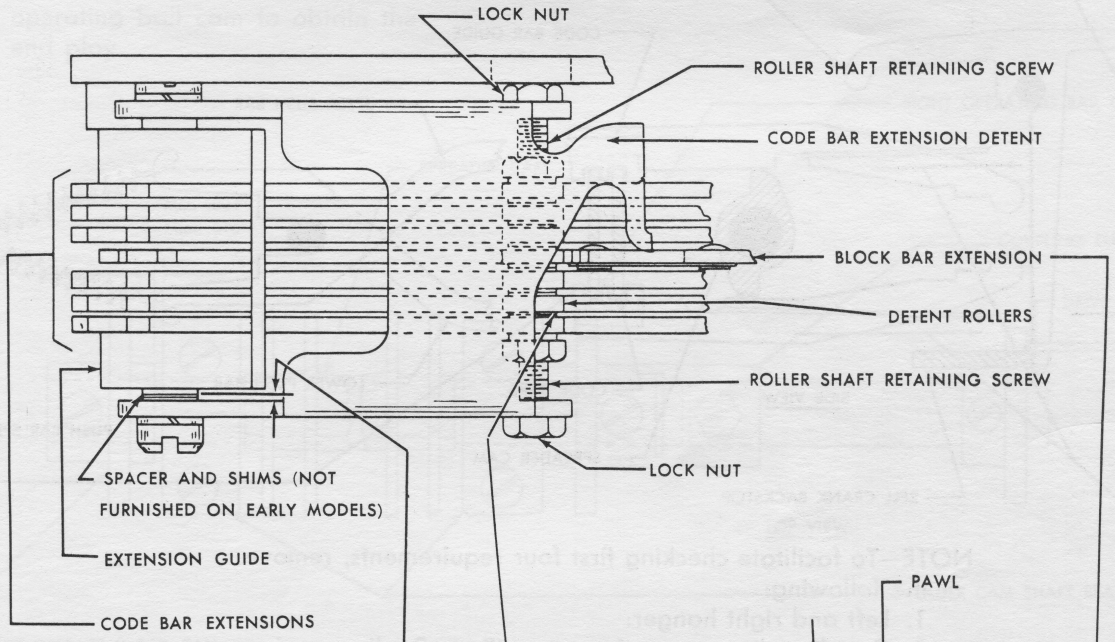

CODE BAR EXTENSION DETENT END PLAY

Requirement—Some end play
Max. .008"
To Adjust—Add or remove shims between spacer and front arm of detent.

CODE BAR EXTENSION DETENT ROLLER

Requirement—(1) some end play between any two adjacent detent rollers.
Max. .005"
(2) Detent rollers centrally located with respective code bar extension when detent side play is taken up in first one direction and then the other.
To Adjust—Position the two roller shaft retaining screws with lock nuts loosened.

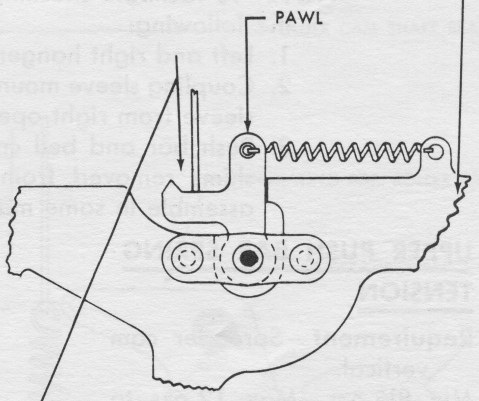

BLOCK BAR EXTENSION PAWL SPRING TENSION

Requirement—With transfer bail roller just ready to start on rise of its cam (Page 17), move block bar extension to right and lift detent clear of the extensions.
Min. 16 ozs.—Max. 21 ozs. to start pawl moving.

KEYLEVER BELL CRANK SPRING TENSION

Requirement—Bell crank resting against its backstop.

Min. 4 ozs.—Max. 6 ozs. to start bell crank moving. Check each bell crank.

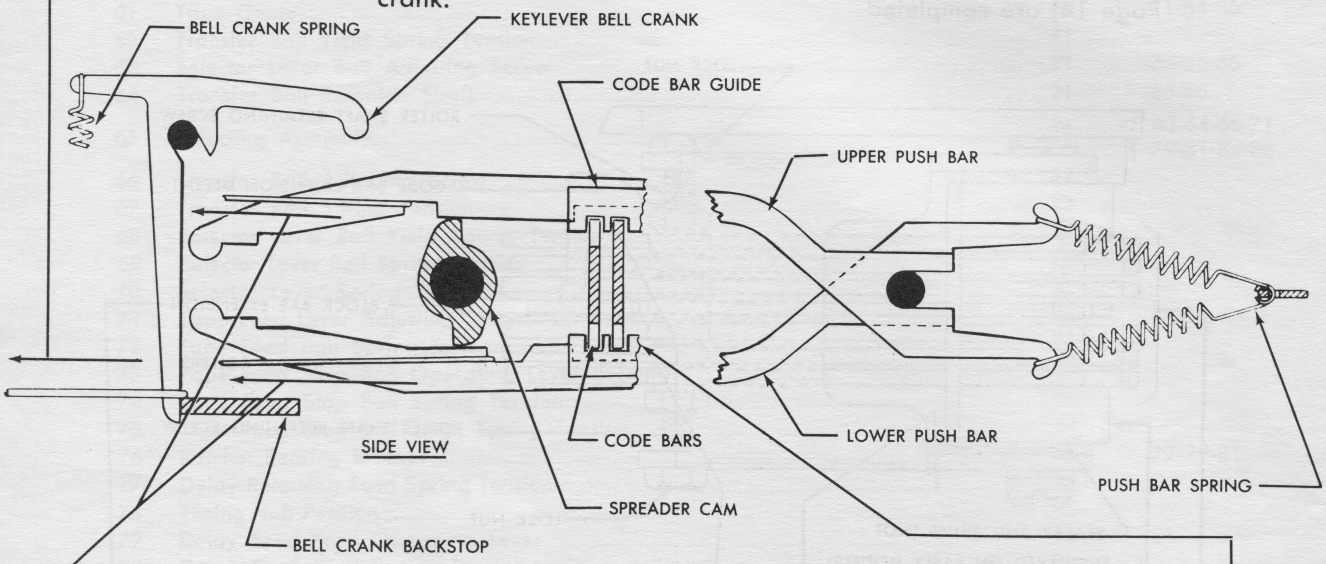

NOTE—To facilitate checking first four requirements, remove the following:

1. Left and right hanger.
2. Coupling sleeve mounting screw (Page 3—disengaging sleeve from right operating bail cam).
3. Push bar and bell crank assemblies (note number of shims removed from each side of casting and re-assemble in same manner).

UPPER PUSH BAR SPRING TENSION

Requirement—Spreader cam vertical.

Min. 8½ ozs.—Max. 12 ozs. to start upper push bar moving. Check each bar.

LOWER PUSH BAR SPRING TENSION

Requirement—Spreader cam vertical.

Min. 12½ ozs.—Max. 16 ozs. to start lower push bar moving. Check each bar.

CODE BAR GUIDES

Requirement—With spreader cam vertical. Code bars should move freely in guide and should drop of their own weight when code bar assembly is held in vertical position.

To Adjust—Position code bar guides.

SPREADER CAM SHAFT BEARING

Requirement — Rotate spreader cam through a complete revolution with operating bail roller arm springs (lower fig.) removed. Shaft should turn without binding and have some end play.

Min. .004"—Max. .010".

To Adjust — Position the bearings to align the shaft. Position the left operating bail cam to obtain the end play.

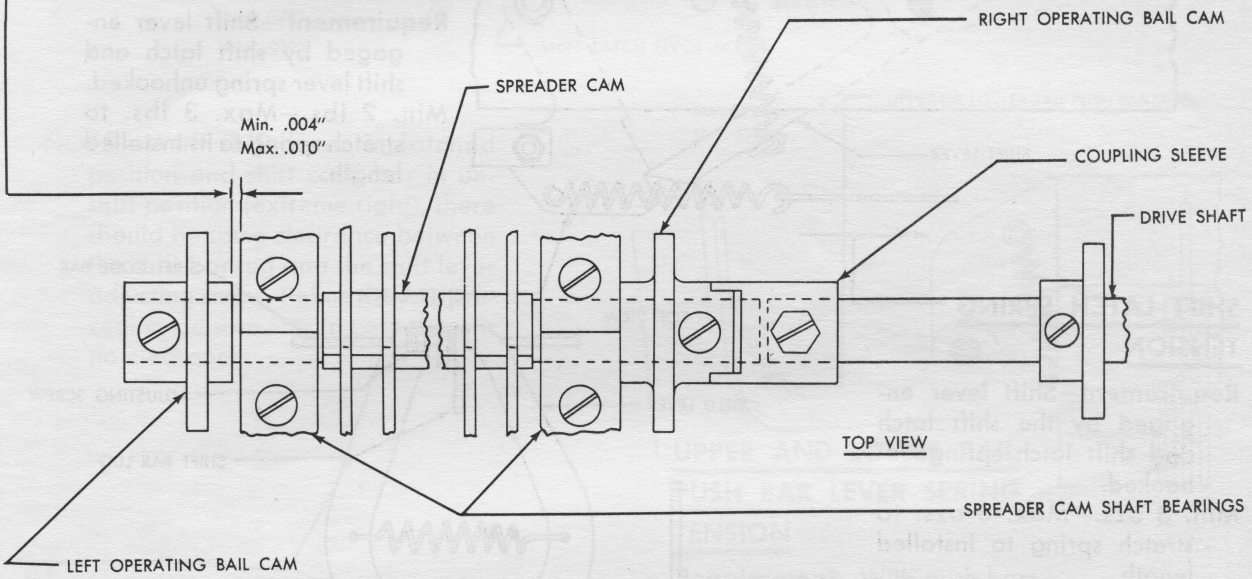

OPERATING BAIL ROLLER ARM SPRING TENSION

Requirement—Operating bail cam roller on low part of its cam and bail lever springs unhooked.

Min. 1¾ lbs.—Max. 2¼ lbs. to stretch the spring to its installed length.

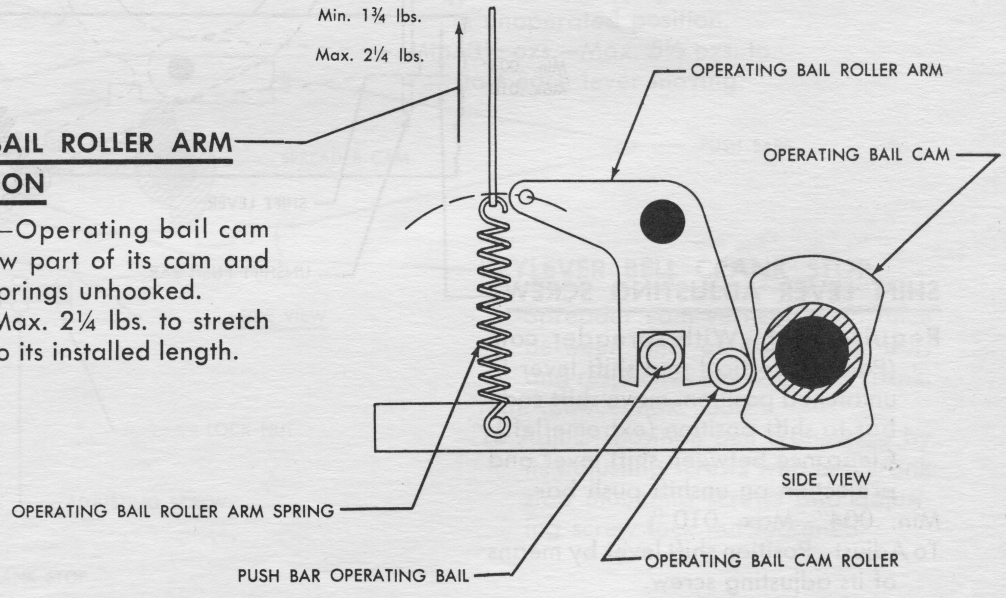

NOTE—The following five requirements may be checked with the left base plate removed.

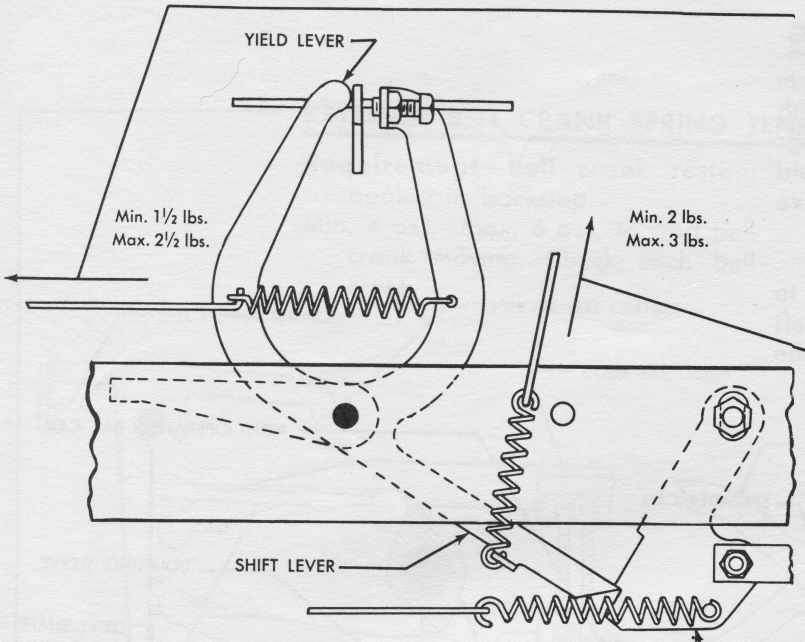

YIELD LEVER SPRING TENSION

Requirement—Shift lever engaged by the shift latch and yield lever spring unhooked.

Min. 1½ lbs.—Max. 2½ lbs. to stretch spring to its installed length.

SHIFT LEVER SPRING TENSION

Requirement—Shift lever engaged by shift latch and shift lever spring unhooked.

Min. 2 lbs.—Max. 3 lbs. to stretch spring to its installed length.

SHIFT LATCH SPRING TENSION

Requirement—Shift lever engaged by the shift latch and shift latch spring unhooked.

Min. 3 ozs.—Max. 6 ozs. to stretch spring to installed length.

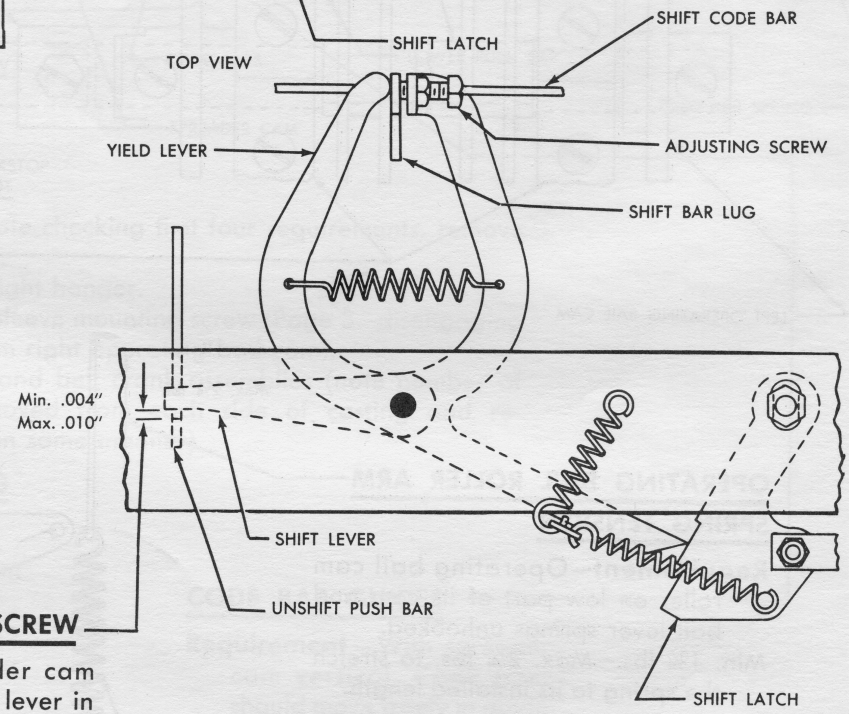

SHIFT LEVER ADJUSTING SCREW

Requirement—With spreader cam (Page 5) vertical and shift lever in unlatched position, move shift code bar to shift position (extreme left). Clearance between shift lever and projection on unshift push bar.

Min. .004"—Max. .010 ".

To Adjust—Position shift lever by means of its adjusting screw.

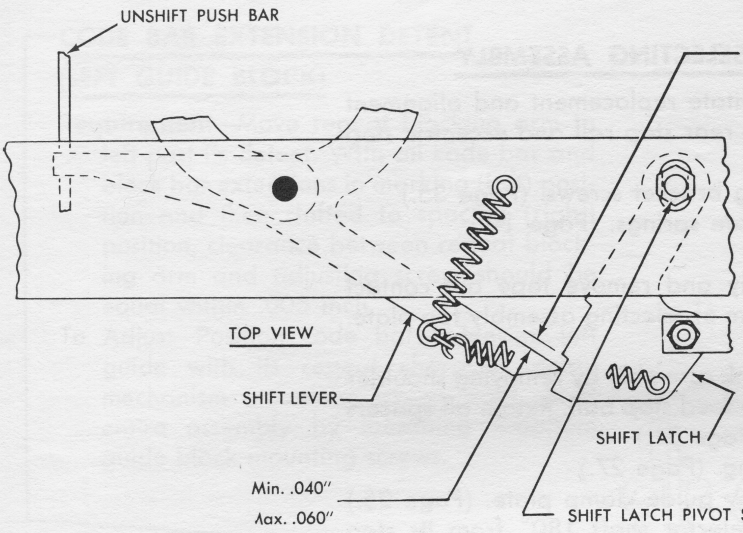

SHIFT LATCH

Requirement — Spreader cam (lower fig.) vertical. Manually move the Zero code bar to right—1, 2, 3, 4 and 5 to left. Rotate pulley shaft until unshift push bar is selected and moved to its extreme forward position. If Operating Unit is assembled, tape with unshift coding must be used. Clearance between shift lever and shoulder of latch. Min. .040"—Max. .060".

To Adjust — Position shift latch pivot screw.

NOTE—With shift lever in latched position and shift code bar in unshift position (extreme right), there should be some clearance between the shift bar lug and the shift lever adjusting screw. Refine the two preceding adjustments in case there is no clearance.

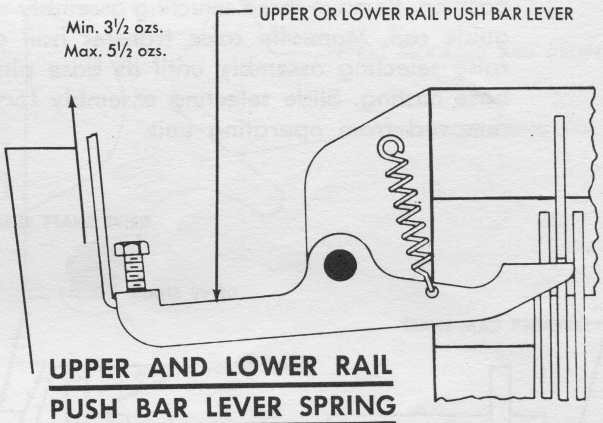

UPPER AND LOWER RAIL PUSH BAR LEVER SPRING TENSION

Requirement—With push bars in unoperated position.

Min. 3½ ozs.—Max. 5½ ozs. to start each lever moving.

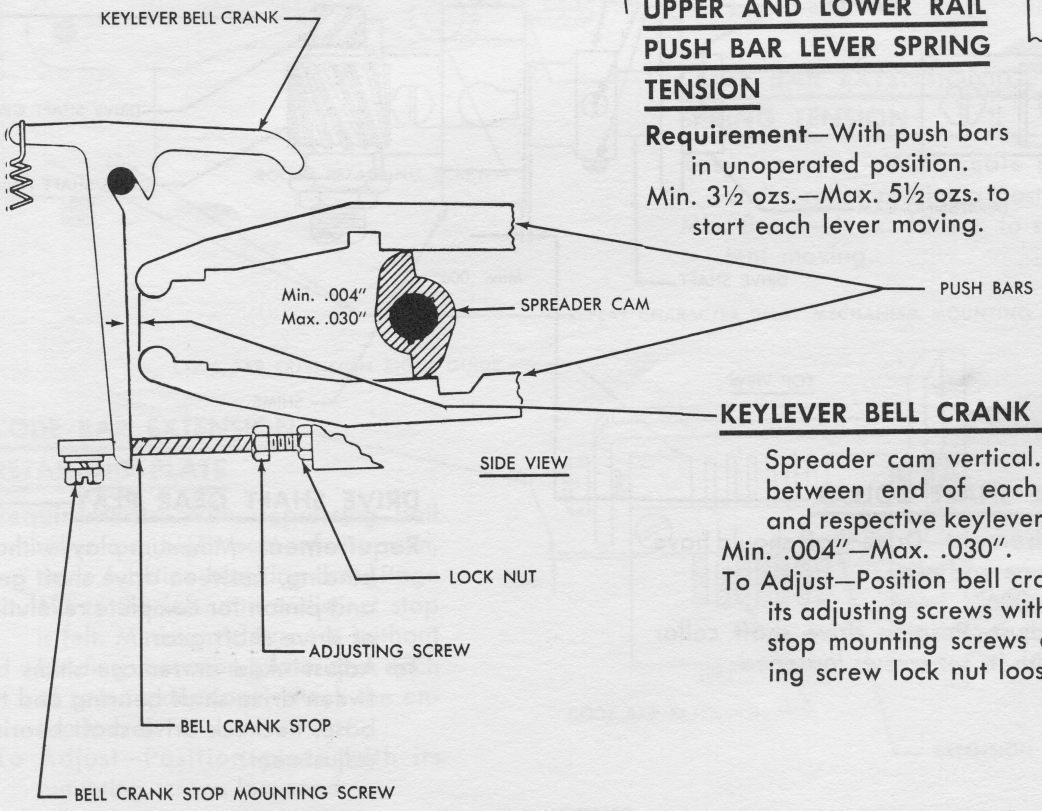

KEYLEVER BELL CRANK STOP

Spreader cam vertical. Clearance between end of each push bar, and respective keylever bell crank. Min. .004"—Max. .030".

To Adjust—Position bell crank stop by its adjusting screws with bell crank stop mounting screws and adjusting screw lock nut loosened.

INSTRUCTIONS FOR REMOVING THE SELECTING ASSEMBLY

NOTE—Remove only for servicing. To facilitate replacement and alignment of selecting assembly, make sure that rear stop rail and eccentric stop are not loosened.

Remove two tight tape switch mounting bracket screws. (Page 35.)

Unhook two selecting assembly top plate springs. (Page 19.)

Remove two top plate bearings.

Lift top plate off of selecting assembly and remove tape out contact assembly (with push pin) from bottom of selecting assembly top plate.

Latch tape feed stop bail. (Page 24.)

Remove stop bail operating lever and link assembly by removing shoulder screw and unhooking link from tape feed stop bail. Retain all spacers used to position operating lever. (Page 31.)

Unhook tape feed lever extension spring. (Page 27.)

Place the delay feed pawl on the delay guide clamp plate. (Page 25.)

With no tape in tape guide, rotate selector shaft 180° from its stop position. Remove three selecting assembly mounting screws, and front guide rail. Manually raise transfer bail as high as possible. Then raise selecting assembly until its base plate mounting screws clear base casting. Slide selecting assembly forward and to right as it is removed from operating unit.

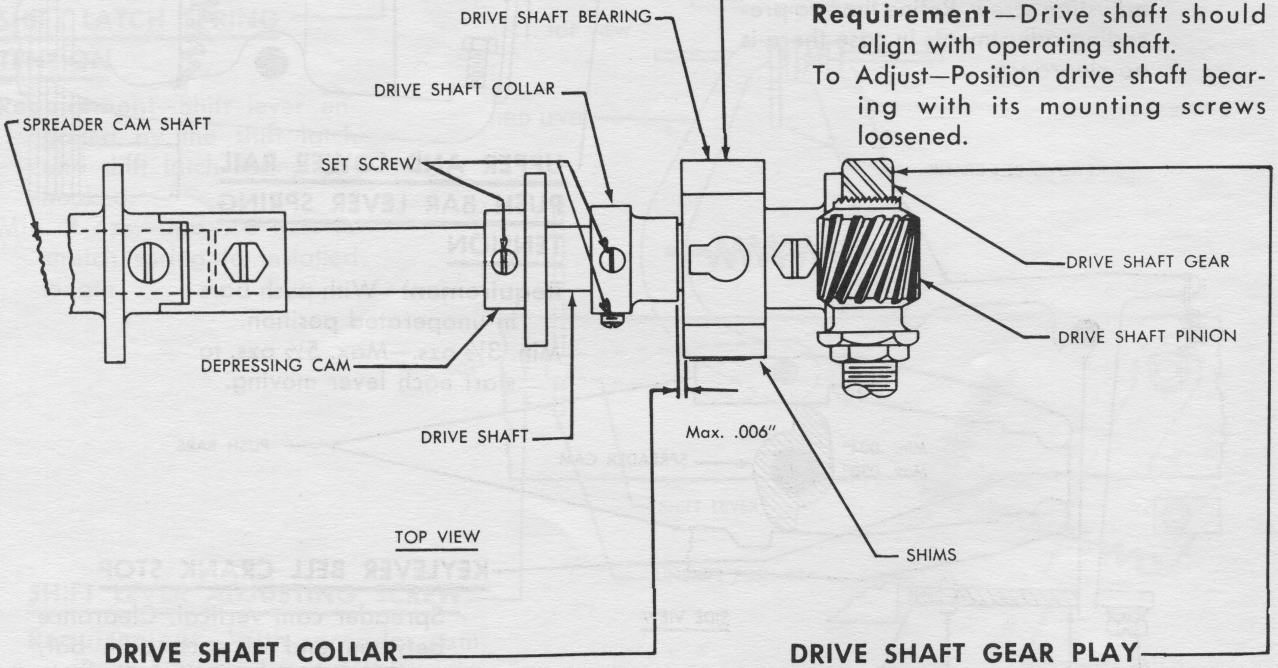

DRIVE SHAFT BEARING

Requirement—Drive shaft should align with operating shaft.

To Adjust—Position drive shaft bearing with its mounting screws loosened.

DRIVE SHAFT COLLAR

Requirement—Drive shaft should have some end play.

Max. .006".

To Adjust—Position drive shaft collar with its set screws loosened.

DRIVE SHAFT GEAR PLAY

Requirement—Minimum play, without binding, between drive shaft gear and pinion for complete revolution of drive shaft gear.

To Adjust—Add or remove shims between drive shaft bearing and the base. Recheck drive shaft bearing adjustment.

CODE BAR EXTENSION DETENT (LEFT GUIDE BLOCK)

Requirement—Move repeat blocking arm to left past its detent. With all code bar and block bar extensions in marking (left) position and then shifted to spacing (right) position, clearance between repeat blocking arm and adjusting screw should be equal within .005 inch.

To Adjust—Position code bar extension left guide with its repeat character delay mechanism mounting screws tight. Shift entire assembly by loosening 4-bottom guide block mounting screws.

REPEAT BLOCKING ARM DETENT SPRING TENSION

Requirement—Selector shaft in stop position.

Min. ¾ oz.—Max. 1¼ ozs. to start detent moving.

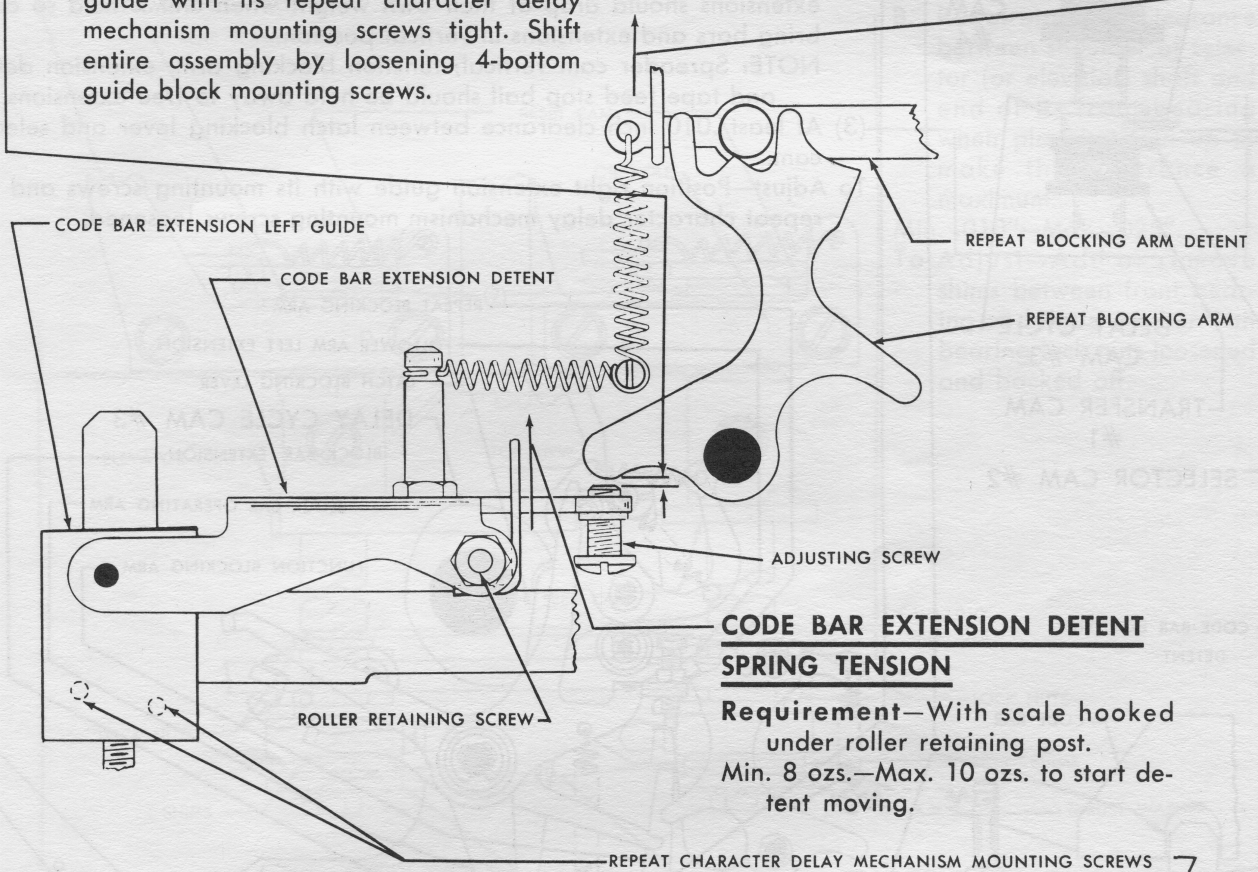

CODE BAR EXTENSION DETENT SPRING TENSION

Requirement—With scale hooked under roller retaining post.

Min. 8 ozs.—Max. 10 ozs. to start detent moving.

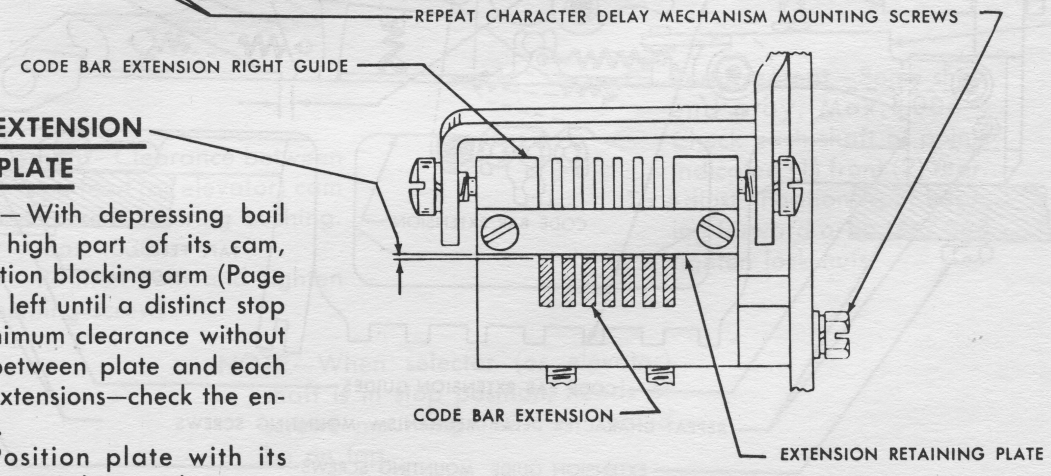

CODE BAR EXTENSION RETAINING PLATE

Requirement—With depressing bail roller on high part of its cam, move function blocking arm (Page 12) to the left until a distinct stop is felt. Minimum clearance without binding between plate and each of seven extensions—check the entire travel.

To Adjust—Position plate with its mounting screws loosened.

CODE BAR EXTENSION GUIDE (RIGHT HAND GUIDE BLOCK)

Requirement—Rotate pulley shaft until selector shaft turns 180° (approx.) from its stop position.

(1) Clearance between block bar extension operating arm and right shoulder of notch in block bar extension.

Min. .018"—Max. .025".

To Check—Move repeat blocking arm (to right) under left extension of delay follower arm; move block bar extension and function blocking arm to left.

(2) Code bar extensions should align with code bars. Projections on bottom of extensions should align with code levers (Page 31). Code bars and extensions should drop of their own weight when unit is held so as to bring bars and extensions in vertical position.

NOTE: Spreader cam vertical; function blocking arm, extension detent and tape feed stop bail should be held away to free extensions.

(3) At least .010 inch clearance between latch blocking lever and selector cam.

To Adjust—Position right extension guide with its mounting screws and left repeat character delay mechanism mounting screws loosened.

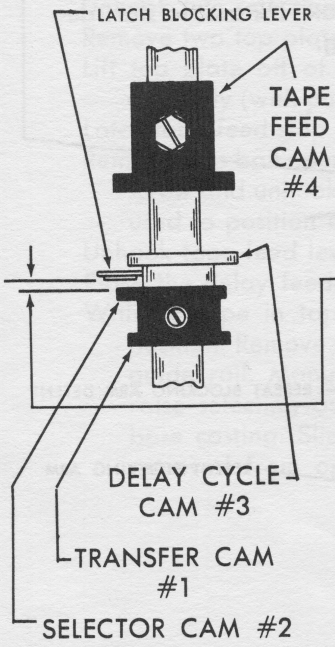

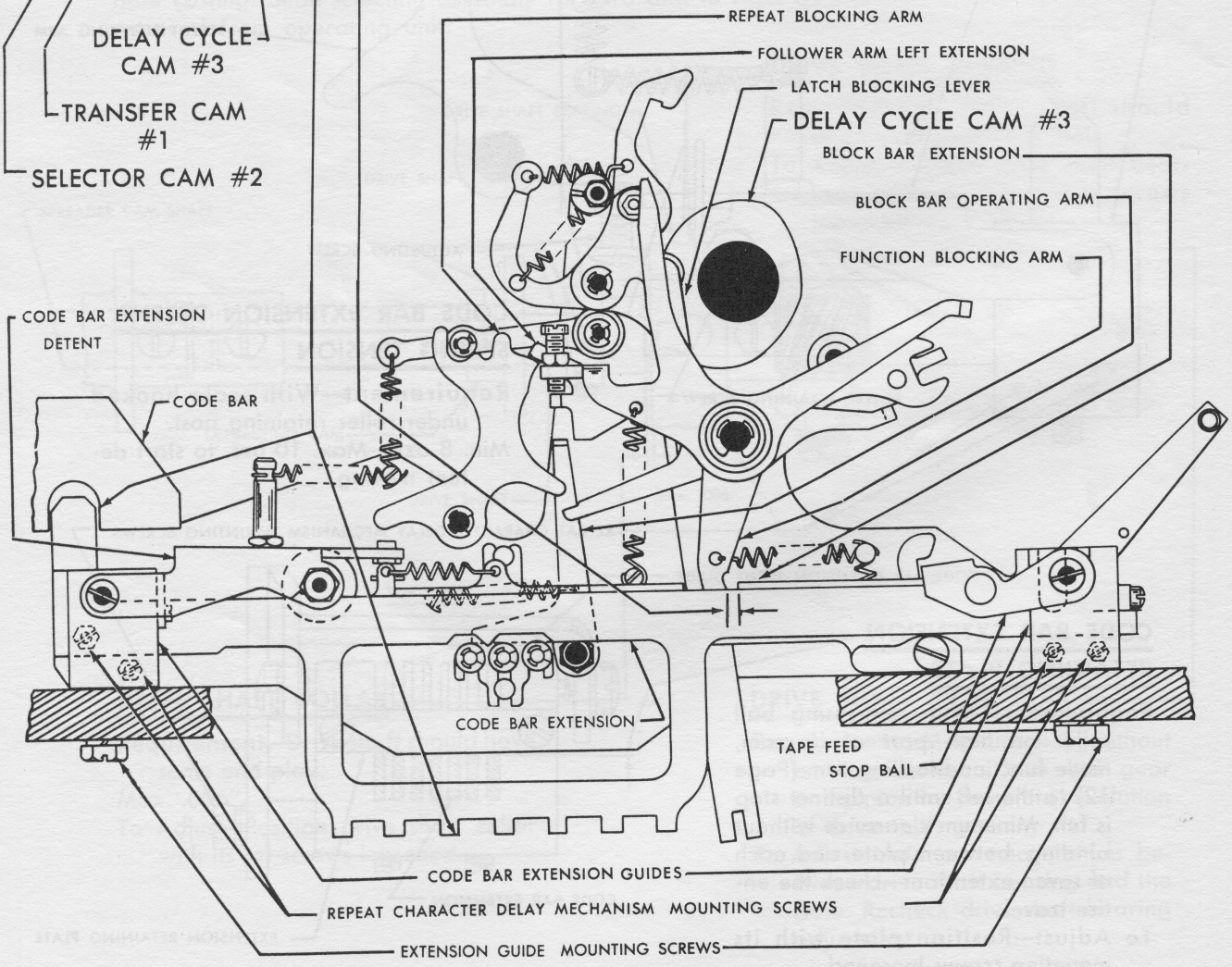

NOTE—Replace elevator shaft:
Insert shaft through rear bearing with clutch stop lug at top and throw-out lever, reset. Replace components removed (reverse order of Page 1).

SELECTOR AND ELEVATOR SHAFT END PLAY

A. **Requirement**—Selector and elevator shafts should turn freely.
To Adjust—Align front and rear bearing brackets with their mounting screws loosened.

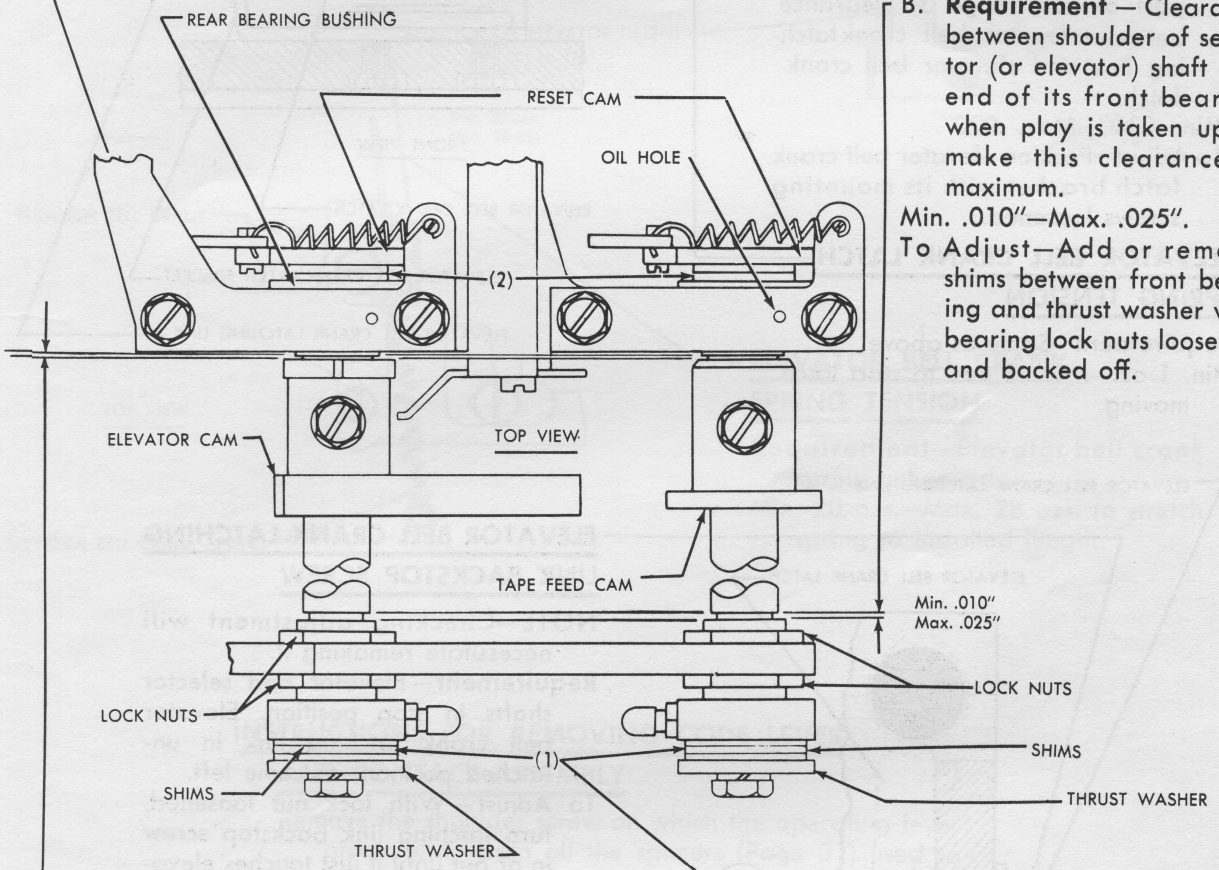

B. **Requirement** — Clearance between shoulder of selector (or elevator) shaft and end of its front bearing when play is taken up to make this clearance a maximum.
Min. .010"—Max. .025".
To Adjust—Add or remove shims between front bearing and thrust washer with bearing lock nuts loosened and backed off.

C. **Requirement**—Some shaft end play. Max. .006". Check each shaft at points indicated (1) front (2) rear.
To Adjust—Position front bearing forward or to rear and tighten lock nuts.

D. **Requirement**—Clearance between hub of tape feed (or elevator) cam and end of rear bearing bushing.
Min. .010"—Max. .030".
To Adjust—Position cam and tighten its mounting screws.

NOTE—When selector (or elevator) shaft is in stop position, heads of screws mounting the cam should be on top.

ELEVATOR BELL CRANK LATCH BRACKET

Requirement—Insert tape with elevator combination in tape guide (if selector assembly is removed, move No. 2 code bar and block bar to left with other code bars to right and spreader cam—Page 2 vertical). Rotate pulley shaft until operating bail roller is on center of high part of cam (Page 3) clearance between elevator bell crank latching link and elevator bell crank latch.

Min. .010"—Max. .020".

To Adjust—Position elevator bell crank latch bracket with its mounting screws loosened.

ELEVATOR BELL CRANK LATCH SPRING TENSION

Requirement—Same as above.

Min. 1 oz.—Max. 3 ozs. to start latch moving.

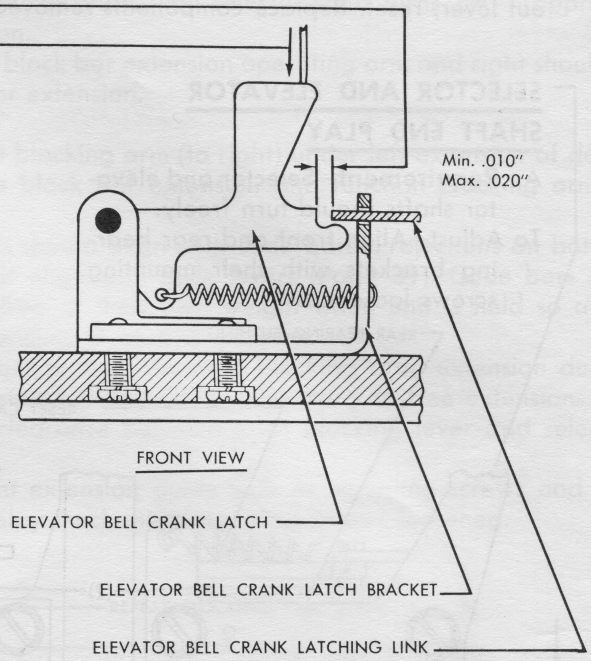

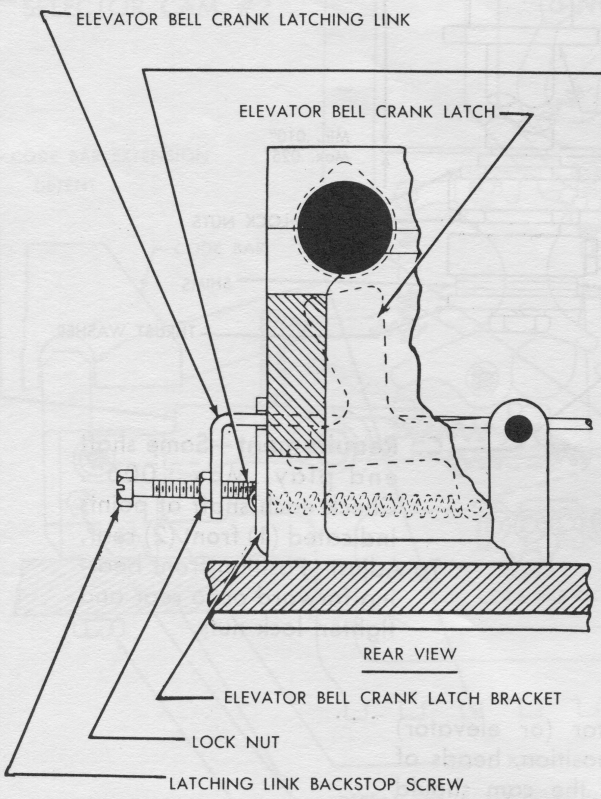

ELEVATOR BELL CRANK LATCHING LINK BACKSTOP SCREW

NOTE—Checking adjustment will necessitate remaking it.

Requirement—Elevator and selector shafts in stop position. Elevator bell crank latching link in unlatched position—extreme left.

To Adjust—With lock nut loosened, turn latching link backstop screw in or out until it just touches elevator bell crank latch bracket. Then advance screw one quarter turn.

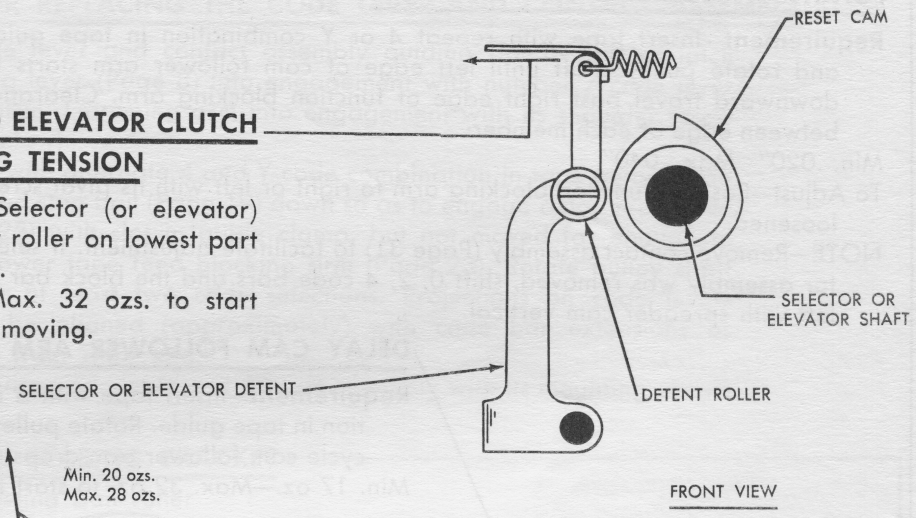

SELECTOR AND ELEVATOR CLUTCH DETENT SPRING TENSION

Requirement—Selector (or elevator) clutch detent roller on lowest part of reset cam.

Min. 22 ozs.—Max. 32 ozs. to start each detent moving.

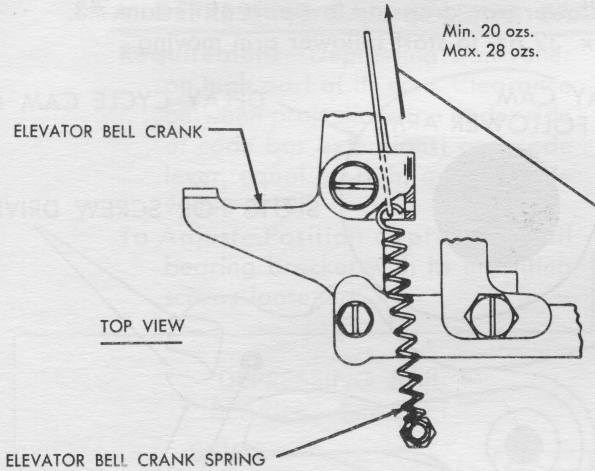

ELEVATOR BELL CRANK SPRING TENSION

Requirement—Elevator bell crank spring unhooked.

Min. 20 ozs.—Max. 28 ozs. to stretch spring to installed length.

INSTRUCTIONS FOR REMOVING CODE LEVER AND CONTACT ASSEMBLY

Remove the shoulder screw on which the operating lever pivots and retain all the spacers (Page 31) used to position the lever. Unhook the link from the tape feed stop bail and remove the operating lever and link assembly (Page 24).

Remove the contact mounting screws and the spacers to relieve the strain on the cable connections.

Remove the four screws which hold the code lever assembly mounting plate to the base.

FUNCTION BLOCKING ARM POSITION

Requirement—Insert tape with repeat 4 or Y combination in tape guide and rotate pulley shaft until left edge of cam follower arm starts its downward travel past right edge of function blocking arm. Clearance between edge of each member:

Min. .020"—Max. .040".

To Adjust—Position function blocking arm to right or left with its pivot screw loosened.

NOTE—Remove contact assembly (Page 31) to facilitate adjustment. If selector assembly was removed, shift 0, 2, 4 code bars and the block bar to left with spreader cam vertical.

DELAY CAM FOLLOWER ARM SPRING TENSION

Requirement—Insert tape with a repeat character combination in tape guide. Rotate pulley shaft until roller of delay cycle cam follower arm drops on low part of its cam #3.

Min. 17 oz.—Max. 32 oz. to start follower arm moving.

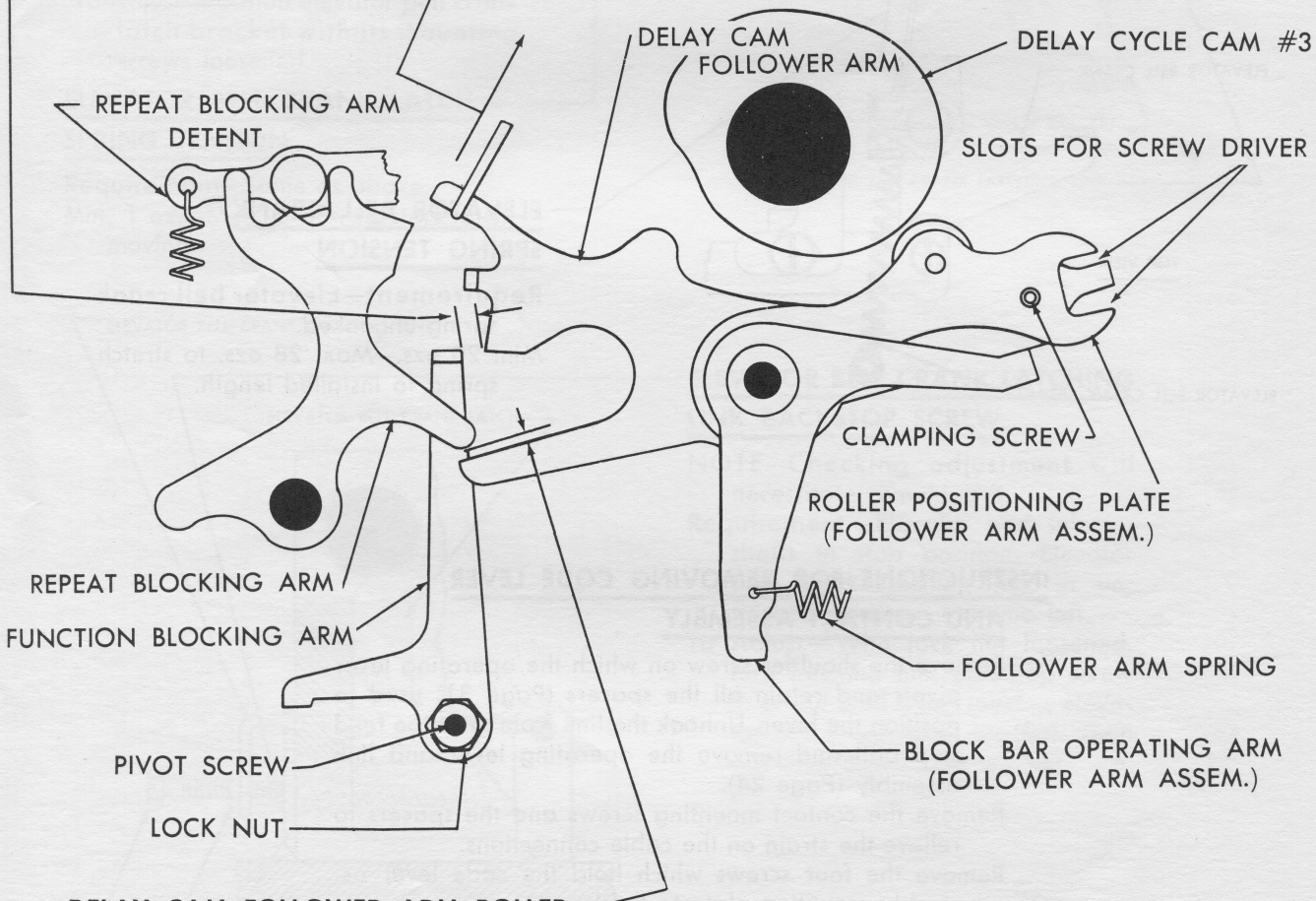

DELAY CAM FOLLOWER ARM ROLLER

Requirement—Rotate pulley shaft until follower arm roller is on high part of its cam #3. Clearance between lower left extension of follower arm and lower right extension of repeat blocking arm.

Min. .010"—Max. .020".

To Adjust—Move roller positioning plate with its clamping screw loosened.

NOTE—Insert screw driver in upper or lower slot at right end of arm and turn slowly.

INSTRUCTIONS FOR REPLACING THE CODE LEVER AND CONTACT ASSEMBLY

Mount code lever and contact assembly guiding slot at end of latch blocking lever (Page 8) into engagement with number 7 code lever and slot in depressing arm into engagement with its shoulder screw (Fig. below).

Insert tape with alternate 4 and Y code combination in tape guide. Hold tape feed stop bail (Page 19) down so as to engage delay feed pawl (Page 25) with slot in guide clamp, but not moved far enough to block lower tape feed blocking arm (Page 23). Rotate pulley shaft through at least two code selections. Projections on code levers should be aligned (approximately) with code bar extensions as viewed from right end.

To Adjust—Position code lever and contact assembly with its mounting screws loosened.

A. DEPRESSING BAIL BEARING BRACKET

Requirement—Depressing bail roller on high part of its cam. Clearance between projections (on under side of code bar extensions) and code lever, equal on right and left side within .010".

To Adjust—Position depressing bail bearing bracket with its mounting screws loosened.

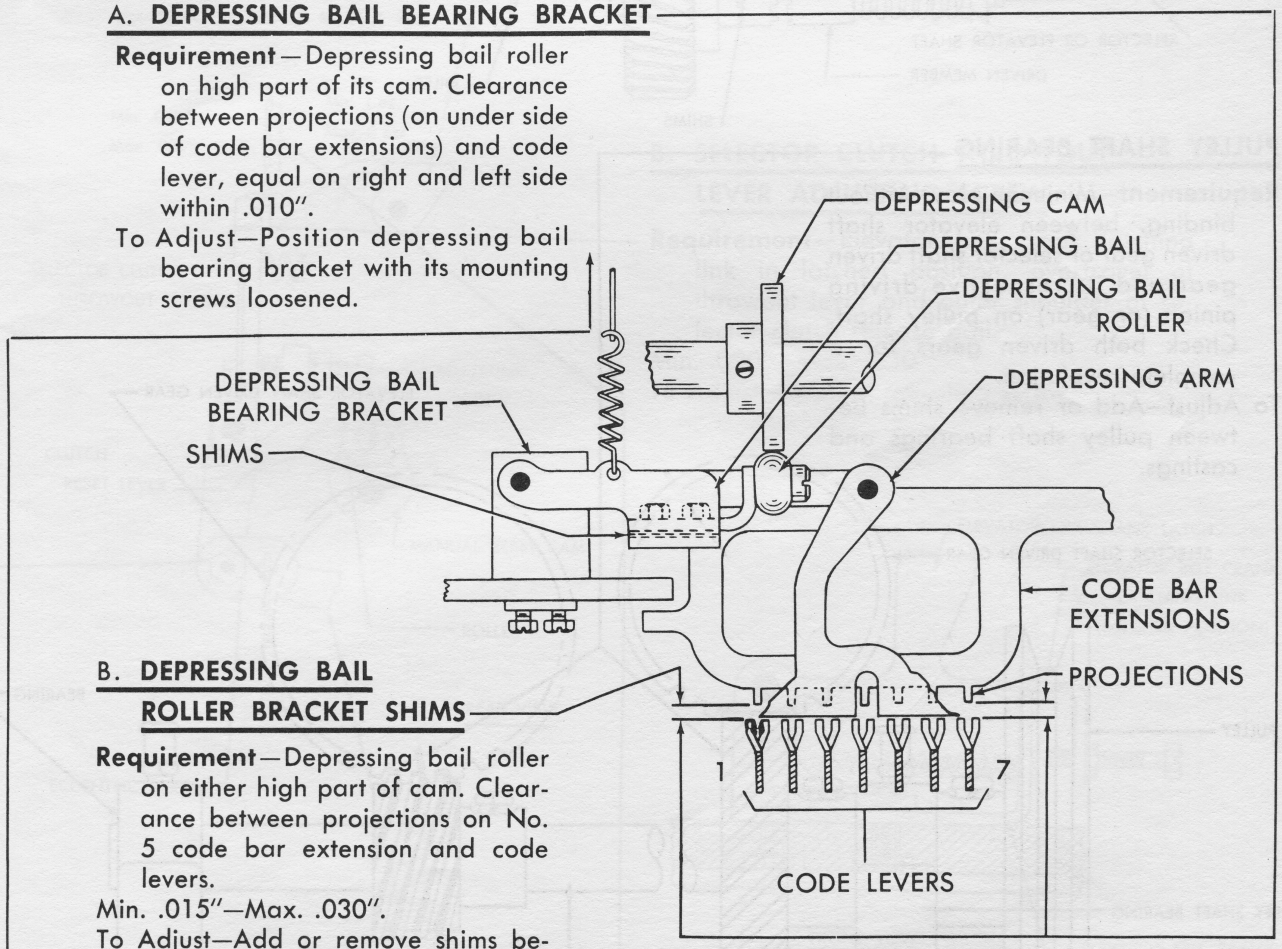

B. DEPRESSING BAIL ROLLER BRACKET SHIMS

Requirement—Depressing bail roller on either high part of cam. Clearance between projections on No. 5 code bar extension and code levers.

Min. .015"—Max. .030".

To Adjust—Add or remove shims between roller bracket and depressing bail.

C. DEPRESSING BAIL SPRING TENSION

Depressing bail roller on low part of its cam. Unhook spring at post.

Min. 10 ozs.—Max. 18 ozs. to stretch spring to installed length.

CLUTCH SPRING TENSION

Requirement—(Page 16)

SELECTOR AND ELEVATOR SHAFT CLUTCH

Requirement—Clearance between teeth of driving and driven member of both clutches.

Min. .020"—Max. .030".

To Check—Selector (or elevator) shaft fully disengaged and gear play taken up in direction for minimum clearance.

To Adjust—Add or remove shims between the driving clutch member and its respective bushing. Align oil holes in bushing with those of driving member.

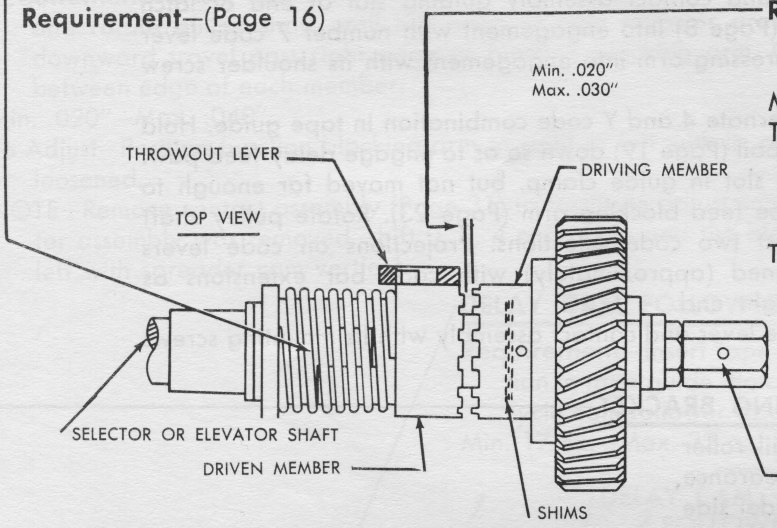

PULLEY SHAFT BEARING

Requirement—Minimum play, without binding, between elevator shaft driven gear or selector shaft driven gear and its respective driving pinion (or gear) on pulley shaft. Check both driven gears for a complete revolution.

To Adjust—Add or remove shims between pulley shaft bearings and castings.

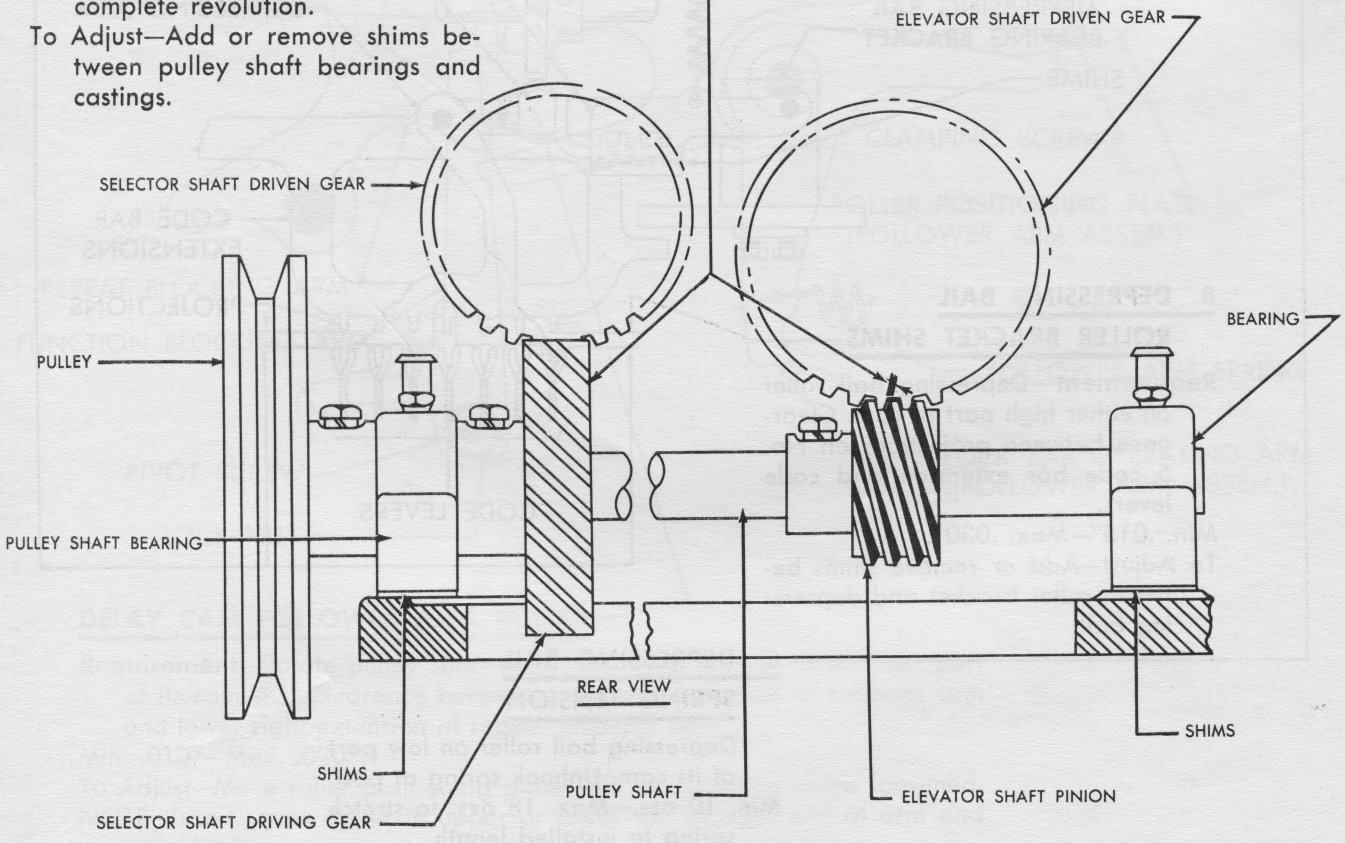

SELECTOR CLUTCH RESET LINK ECCENTRIC

NOTE—Checking adjustment will necessitate remaking it. Remove pulley for better access to eccentric.

Requirement—Manual control lever handle in off position (reset cam vertical). Selector and elevator shaft in stop position. Elevator bell crank latching link in latched position.

To Adjust—Position clutch reset link eccentric bushing so that the reset cam roller just touches the clutch reset lever.

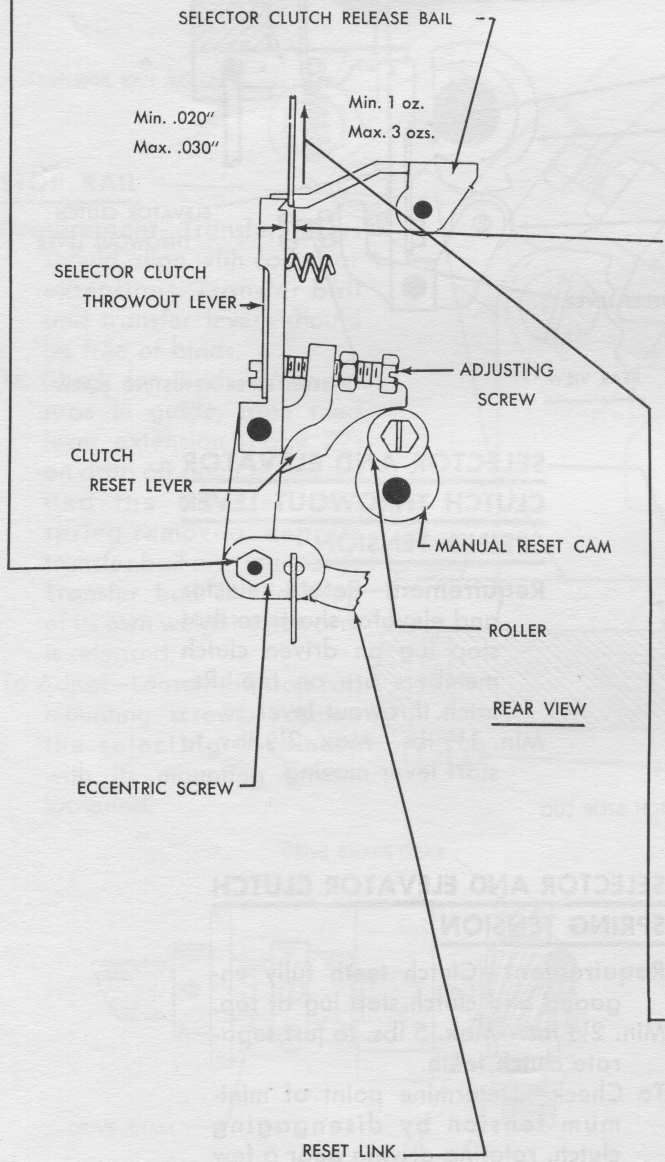

B. SELECTOR CLUTCH THROWOUT LEVER ADJUSTING SCREW

Requirement—Elevator bell crank latching link in latched position, overtravel of throwout lever and outer shoulder of selector clutch release bail.

Min. .020"—Max. .030".

To Adjust—Position adjusting screw.

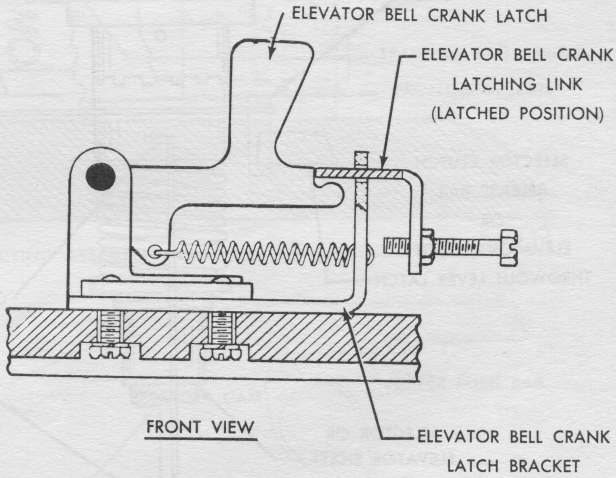

C. SELECTOR CLUTCH RELEASE BAIL SPRING TENSION

Requirement—Manual control handle in "off" position. (Manual reset cam vertical).

Min. 1 oz.—Max. 3 ozs. to start latch moving.

ELEVATOR CLUTCH RESET LEVER ADJUSTING SCREW

Requirement — Elevator clutch reset lever roller on high part of cam. Overtravel of throwout lever and outer shoulder of throwout lever latch.

Min. .020"—Max. .030".

To Adjust—Position reset lever adjusting screw.

ELEVATOR CLUTCH THROWOUT LEVER LATCH SPRING TENSION

Requirement—Elevator clutch reset lever roller on high part of its cam.

Min. 8 ozs.—Max. 12 ozs. to start latch moving.

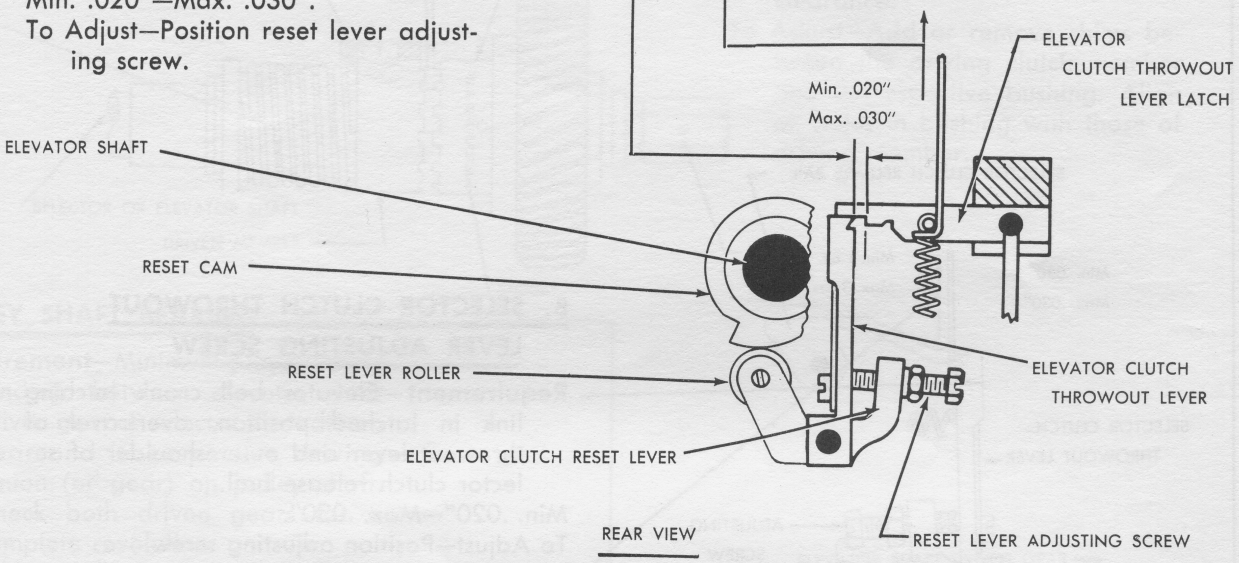

REAR VIEW

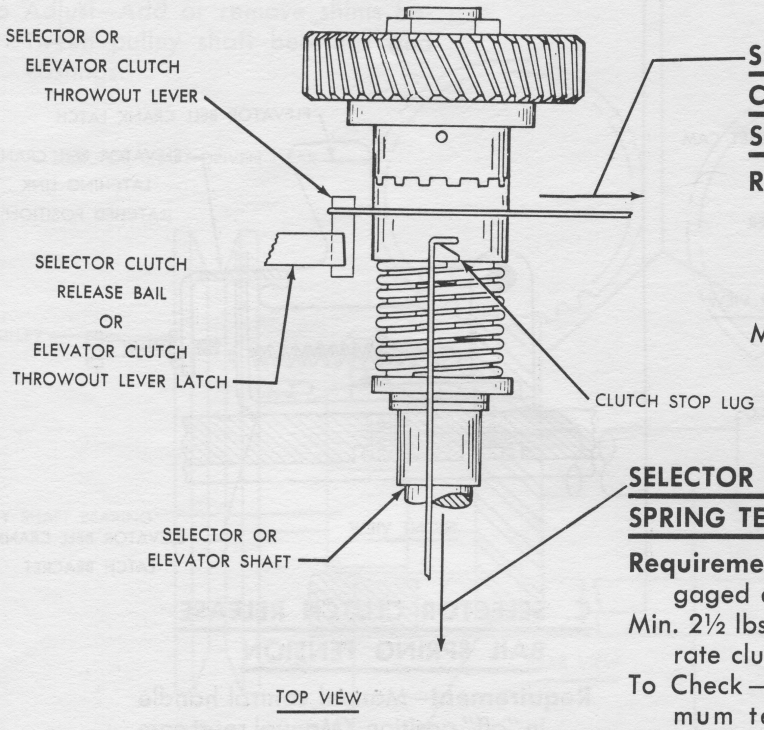

TOP VIEW

SELECTOR AND ELEVATOR CLUTCH THROWOUT LEVER SPRING TENSION

Requirement—Rotate selector and elevator shafts so that stop lug on driven clutch members are on top. Relatch throwout lever.

Min. 1½ lbs.—Max. 2½ lbs. to start lever moving.

SELECTOR AND ELEVATOR CLUTCH SPRING TENSION

Requirement—Clutch teeth fully engaged and clutch stop lug at top.

Min. 2½ lbs.—Max. 5 lbs. to just separate clutch teeth.

To Check—Determine point of minimum tension by disengaging clutch, rotating driving gear a few degrees and repeating test. Replace spring if weak.

INSTRUCTIONS FOR REPLACING THE SELECTING ASSEMBLY

With depressing bail roller (Page 13) and push bars (Page 5) on high part of respective cams, move code bars and block bar with their extensions to the extreme left position. Rotate selector shaft approximately 180° from its stop position, and latch tape feed stop bail (Page 24). With delay feed pawl and retaining pawl (Page 26) disengaged from their respective ratchets, manually hold the transfer bail in its operated position and replace the selecting assembly. Mount the front stop rail.

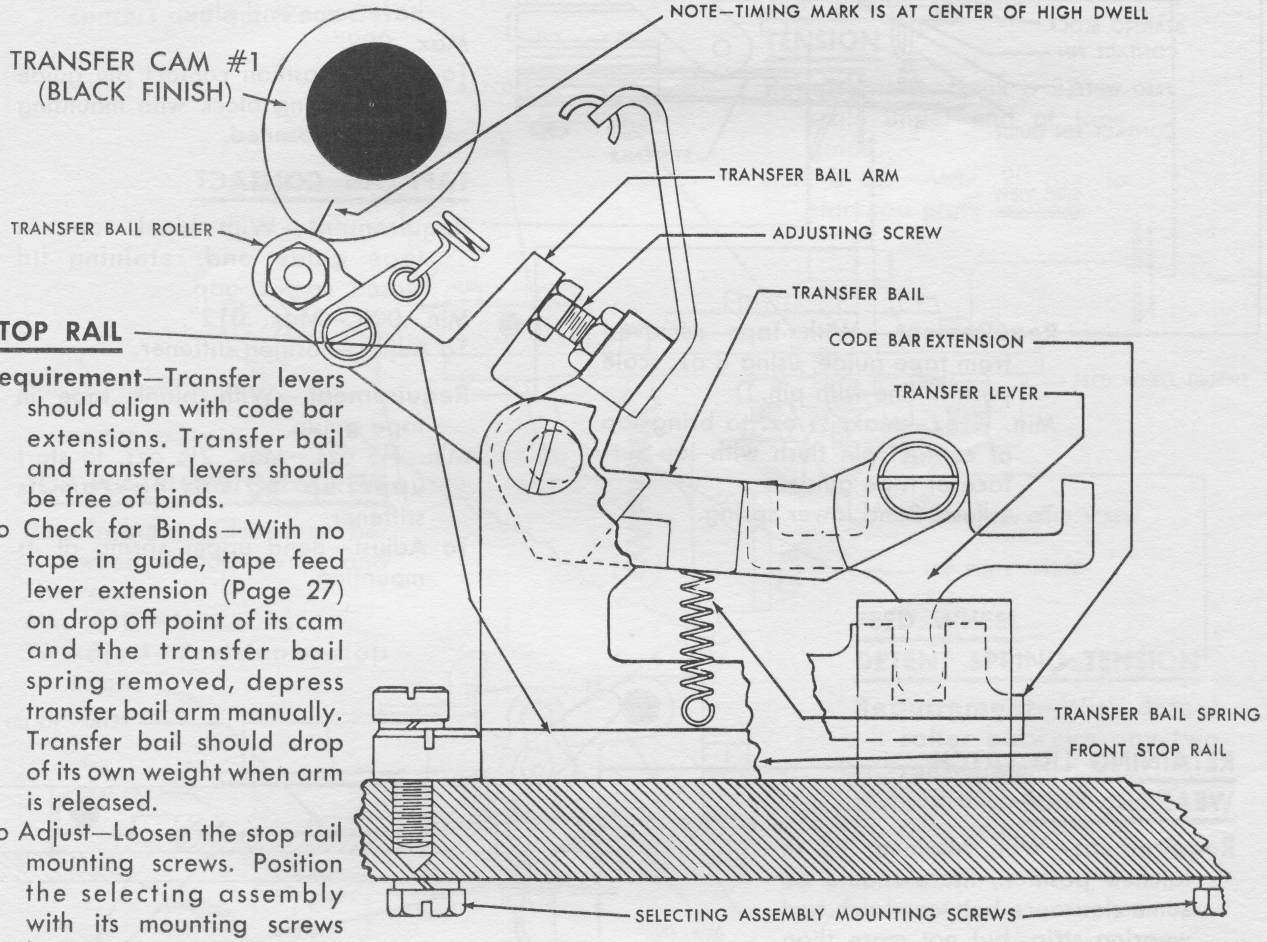

STOP RAIL

Requirement—Transfer levers should align with code bar extensions. Transfer bail and transfer levers should be free of binds.

To Check for Binds—With no tape in guide, tape feed lever extension (Page 27) on drop off point of its cam and the transfer bail spring removed, depress transfer bail arm manually. Transfer bail should drop of its own weight when arm is released.

To Adjust—Loosen the stop rail mounting screws. Position the selecting assembly with its mounting screws loosened.

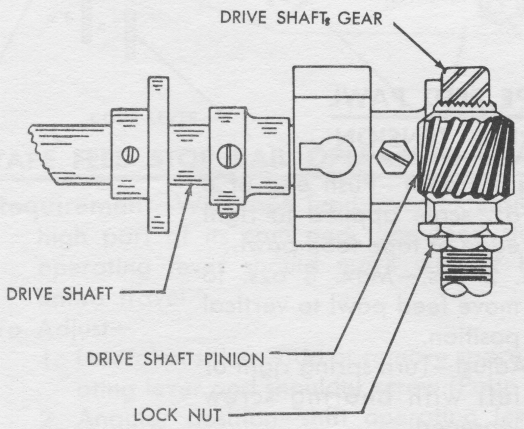

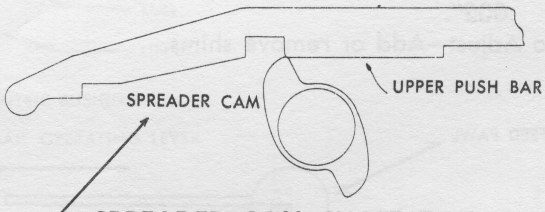

SPREADER CAM SHAFT TIMING

With spreader cam held in position shown, all play in selector shaft taken up in clockwise direction, timing mark on transfer cam #1 directly opposite transfer cam follower roller.

To Adjust—Position drive shaft pinion with its lock nut loosened. Recheck adjustment after nuts are tightened.

ORIGINAL

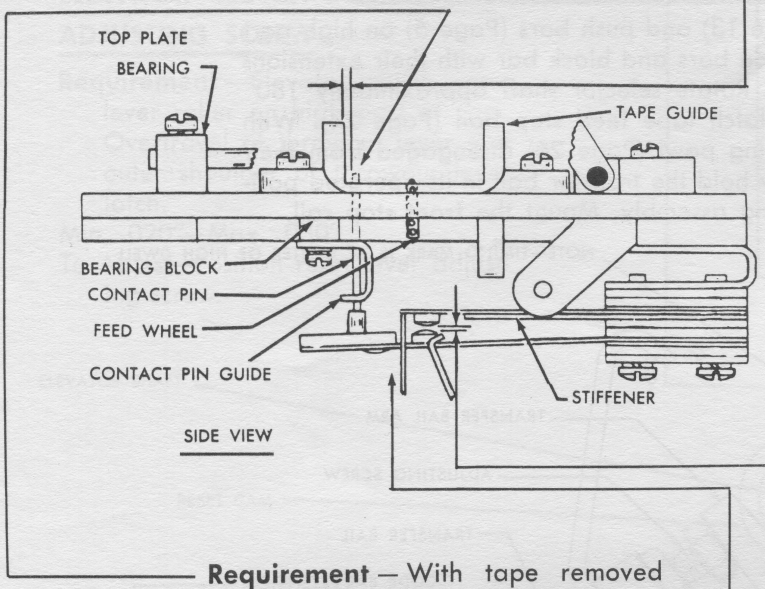

CONTACT PIN GUIDE

Requirement—Clearance between tape-out contact push pin and shoulder of guide plate when side play is taken up to make clearance minimum.
Min. .050"—Max. .060".
With feed wheel detent held away, feed wheel should turn freely and have some end play.
Max. .002".
To Adjust—Position contact pin guide and bearing block with mounting screws loosened.

TAPE-OUT CONTACT

Requirement — With blank tape in tape guide and retaining lid closed, contact gap.
Min. .008"—Max. .012".
To Adjust—Position stiffener.

Requirement — With tape removed from tape guide, using 8 oz. scale push in line with pin.
Min. ¼ oz.—Max. ½ oz. to bring top of contact pin flush with top surface of tape guide.
To Adjust—Bend lower spring.

Requirement — With blank tape in tape guide.
Min. 1½ ozs.—Max. 2½ ozs. to start upper spring moving from its stiffener.
To Adjust—Bend upper spring at its mounting.

RETAINING LID LATCH WEARING STRIP

Requirement—With retaining lid in latched position, there should be some clearance between latch and wearing strip, but not more than .002".
To Adjust—Add or remove shims.

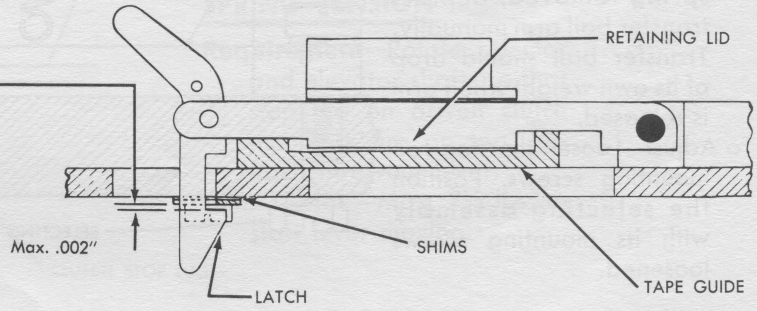

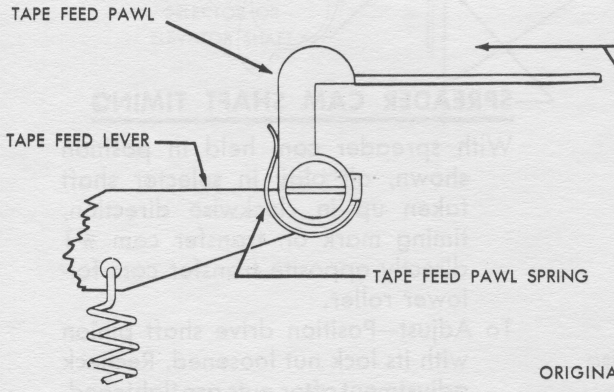

TAPE FEED PAWL SPRING TENSION

Requirement—Push end of 8 oz. scale applied to right edge of tape feed pawl.
Min. 2 ozs.—Max. 3 ozs. to move feed pawl to vertical position.
To Adjust—Turn spring right or left with bearing screw loosened.

ORIGINAL

NOTE—In replacing top plate, guide feed pawl into position, rehook two top plate springs and replace bearings.

INSTRUCTIONS FOR REPLACING TAPE FEED STOP BAIL OPERATING LEVER AND LINK

Hook link to stop bail lug.
Mount operating lever to its bracket with shoulder screw, spacers and nut (Page 31).

TOP PLATE SPRING TENSION

Requirement—Hook a 32 oz. scale under end of tape guide.
Min. 8 ozs.—Max. 20 ozs. to start top plate moving.

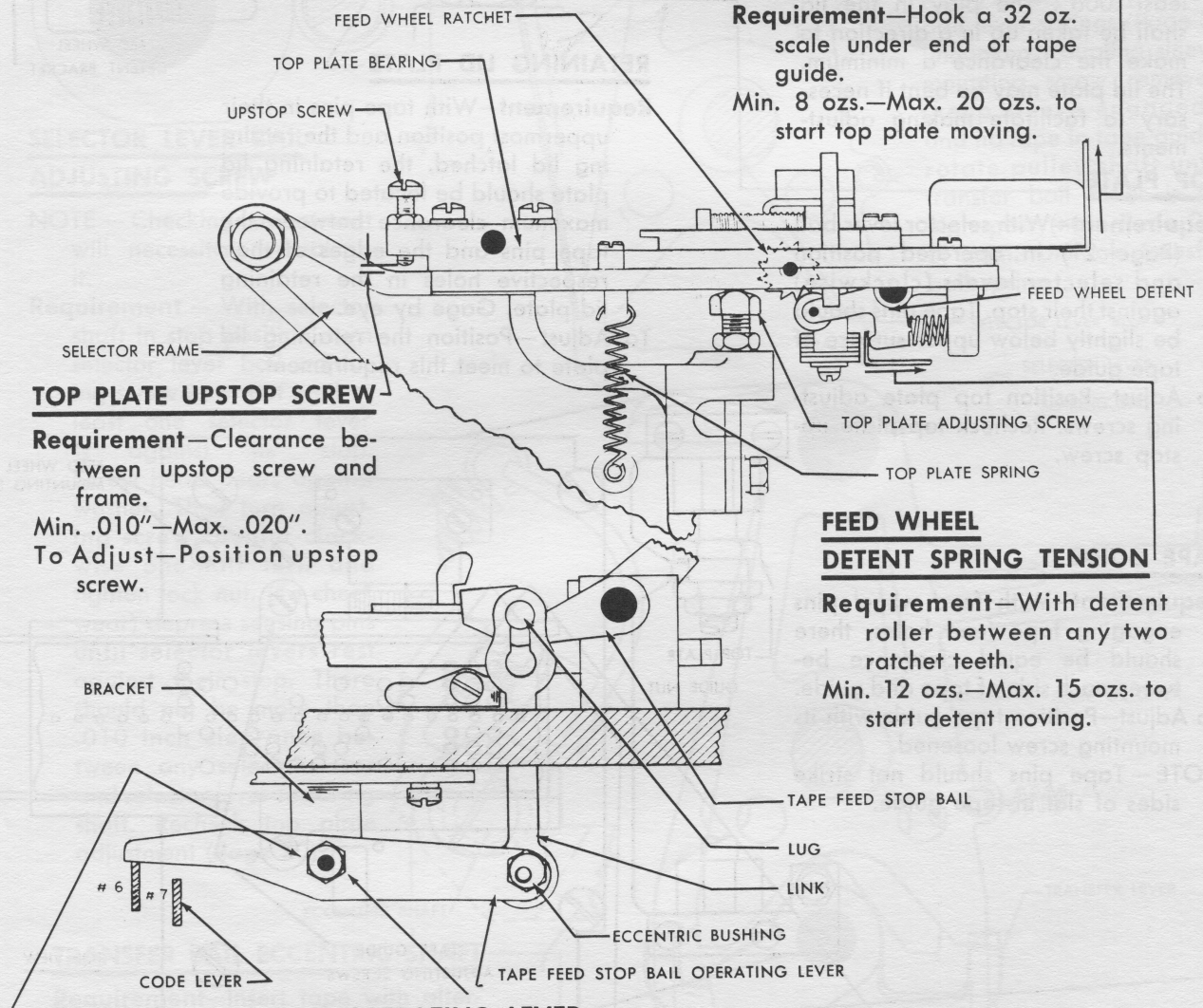

TOP PLATE UPSTOP SCREW

Requirement—Clearance between upstop screw and frame.
Min. .010"—Max. .020".
To Adjust—Position upstop screw.

FEED WHEEL DETENT SPRING TENSION

Requirement—With detent roller between any two ratchet teeth.
Min. 12 ozs.—Max. 15 ozs. to start detent moving.

TAPE FEED STOP BAIL OPERATING LEVER

Requirement—With tape feed lever extension (Page 27) on high part of its cam and tape feed stop bail latched, operating lever should move without binding over its entire travel.
To Adjust—

1. Lateral position—add or remove spacers between operating lever and shoulder screw (Page 31).
2. Angular position—shift operating lever bracket with its mounting screws loosened.

TAPE SPACE ADJUSTMENT

Requirement—Remove or add shims between the tape retaining lid and the retaining lid plate so that the space between the tape guide plate and the tape retaining lid plate is from .006" to .008" when measured at the left edge of the retaining lid plate as viewed when facing operating unit. The clearance between the tape guide plate and the retaining lid to the right of the tape pins shall be at least .006". The play in the lid shall be taken up in a direction to make the clearance a minimum. The lid plate may be bent if necessary to facilitate making adjustments.

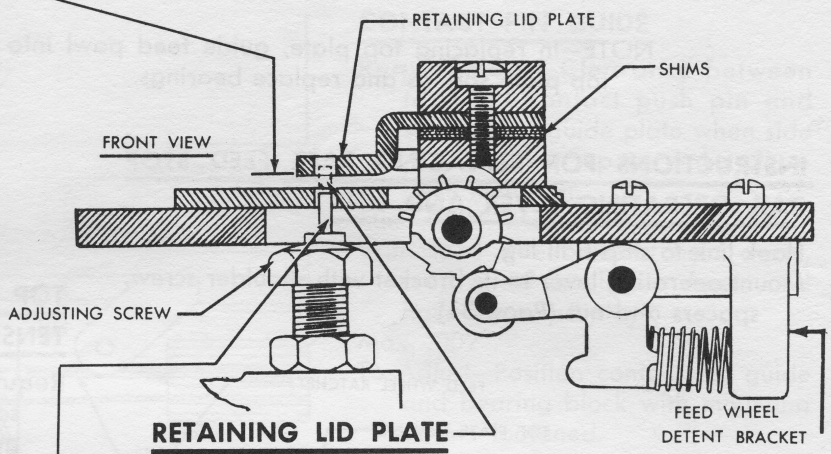

RETAINING LID PLATE

Requirement—With tape pins in their uppermost position and the retaining lid latched, the retaining lid plate should be located to provide maximum clearance between the tape pins and the edges of their respective holes in the retaining lid plate. Gage by eye.

To Adjust—Position the retaining lid plate to meet this requirement.

TOP PLATE

Requirement—With selector lever bail (Page 21) in operated position and selector levers (clockwise) against their stop. Tape pins should be slightly below upper surface of tape guide.

To Adjust—Position top plate adjusting screws. Recheck top plate upstop screw.

TAPE GUIDE

Requirement—With feed wheel pins engaging tape feed holes, there should be equal clearance between each side of tape and guide.

To Adjust—Position tape guide with its mounting screw loosened.

NOTE—Tape pins should not strike sides of slot in tape guide.

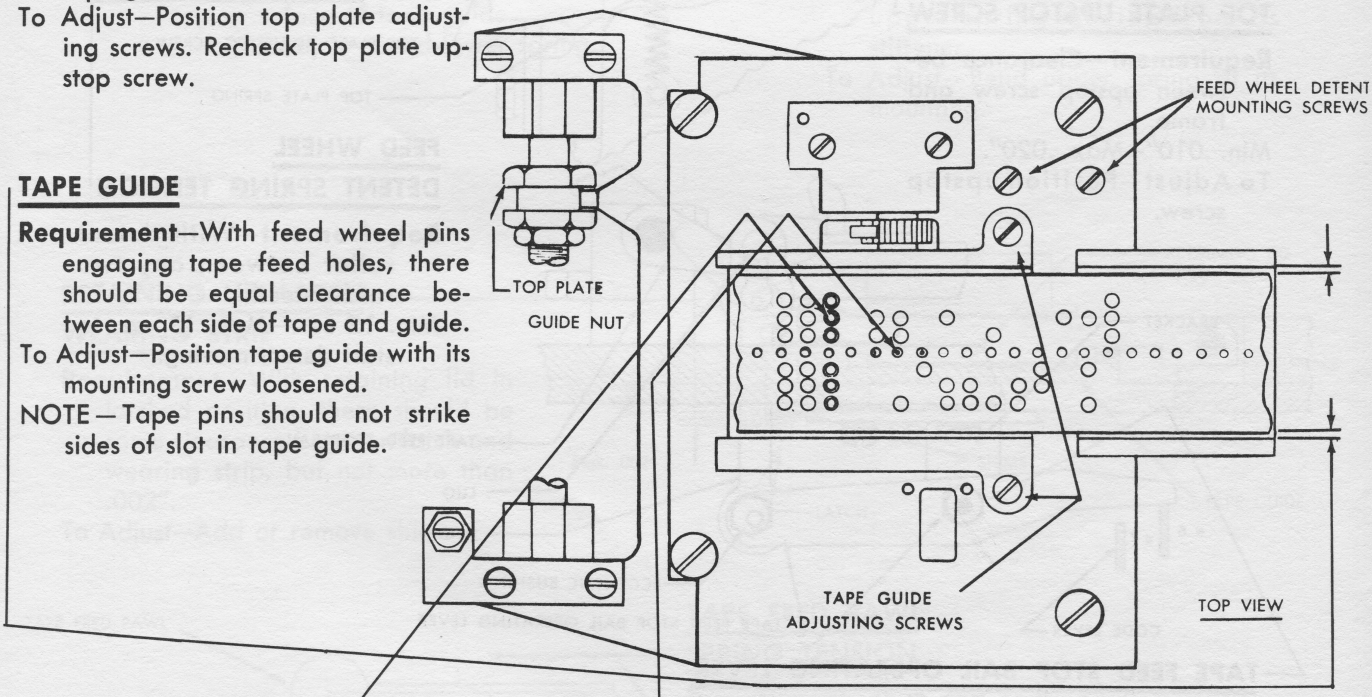

TOP PLATE GUIDE NUT

Requirement—Tape pins centrally located (front to rear) with holes in tape.

To Adjust—Position top plate guide nut.

FEED WHEEL DETENT

Requirement—Perforate tape (rub-out combination) which will conform to gauge No. 2215. Insert this tape in tape guide. Tape pins to extend through tape holes and to be centrally located (laterally).

To Adjust—Position feed wheel detent bracket with its mounting screws loosened.

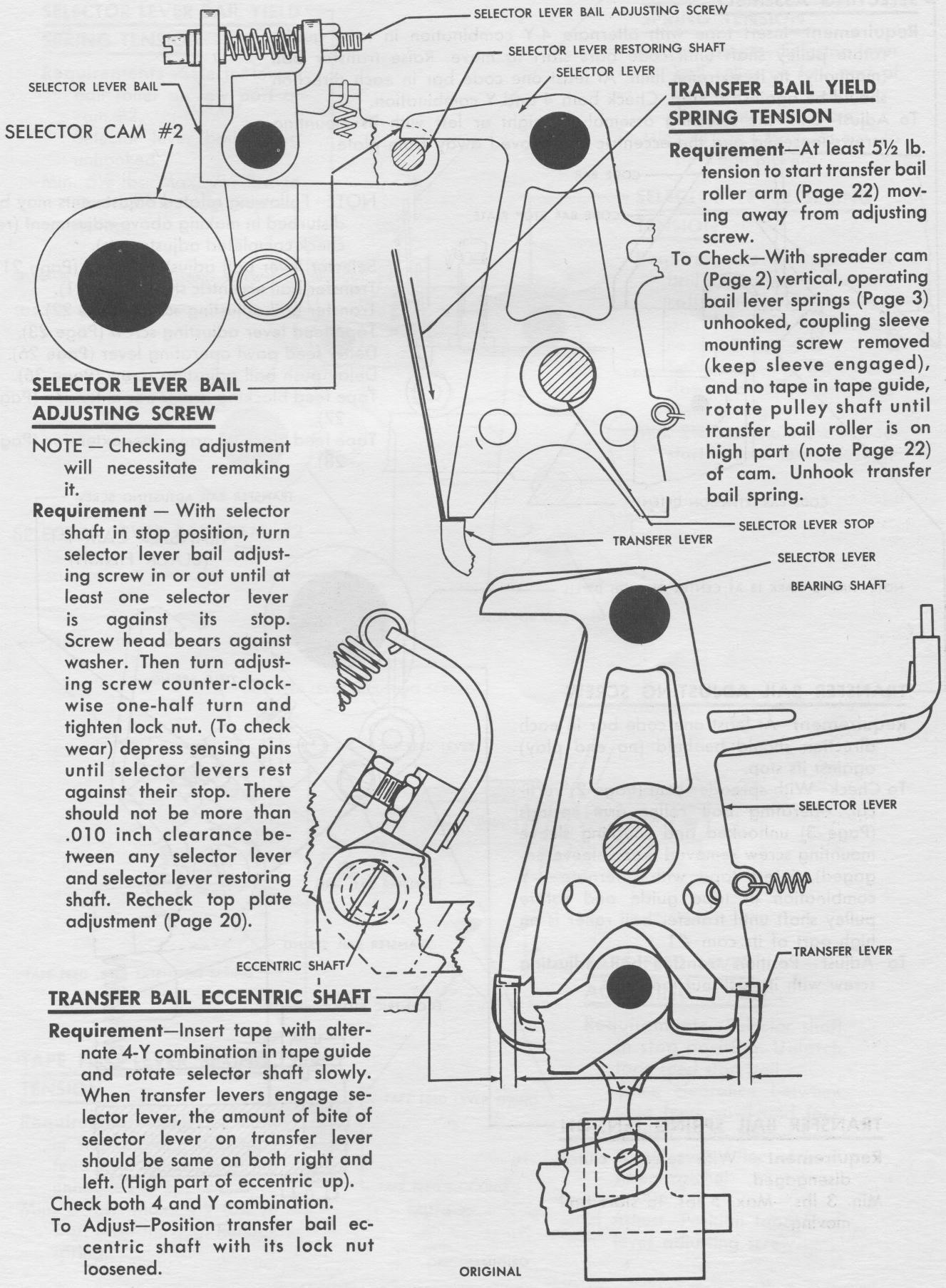

SELECTOR LEVER BAIL ADJUSTING SCREW

NOTE — Checking adjustment will necessitate remaking it.

Requirement — With selector shaft in stop position, turn selector lever bail adjusting screw in or out until at least one selector lever is against its stop. Screw head bears against washer. Then turn adjusting screw counter-clockwise one-half turn and tighten lock nut. (To check wear) depress sensing pins until selector levers rest against their stop. There should not be more than .010 inch clearance between any selector lever and selector lever restoring shaft. Recheck top plate adjustment (Page 20).

TRANSFER BAIL YIELD SPRING TENSION

Requirement—At least 5½ lb. tension to start transfer bail roller arm (Page 22) moving away from adjusting screw.

To Check—With spreader cam (Page 2) vertical, operating bail lever springs (Page 3) unhooked, coupling sleeve mounting screw removed (keep sleeve engaged), and no tape in tape guide, rotate pulley shaft until transfer bail roller is on high part (note Page 22) of cam. Unhook transfer bail spring.

TRANSFER BAIL ECCENTRIC SHAFT

Requirement—Insert tape with alternate 4-Y combination in tape guide and rotate selector shaft slowly. When transfer levers engage selector lever, the amount of bite of selector lever on transfer lever should be same on both right and left. (High part of eccentric up).

Check both 4 and Y combination.

To Adjust—Position transfer bail eccentric shaft with its lock nut loosened.

SELECTING ASSEMBLY

Requirement—Insert tape with alternate 4-Y combination in tape guide, rotate pulley shaft until code bars start to move. Raise transfer bail (manually) to its extreme limit. At least one code bar in each direction should be against its stop. Check both 4 and Y combination.

To Adjust—Shift the selecting assembly to right or left with its mounting screws loosened and the eccentric stop moved away from plate.

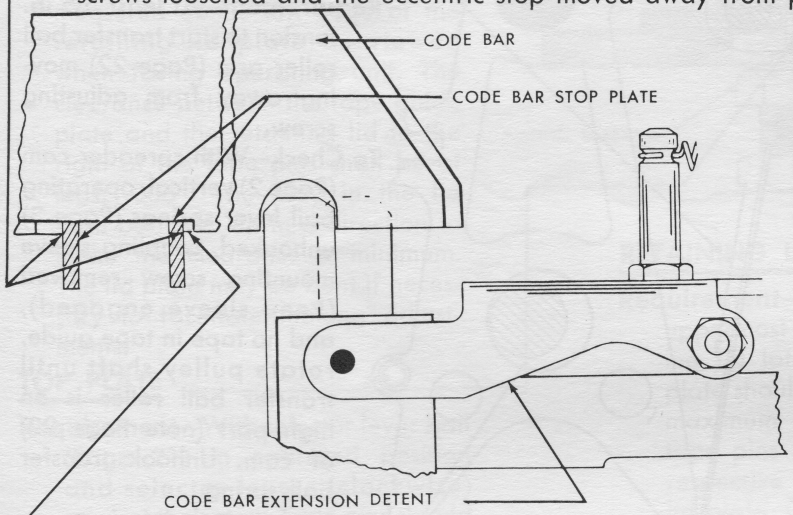

NOTE—Following related adjustments may be disturbed in making above adjustment (recheck completed adjustments).

Selector lever bail adjusting screw (Page 21).
Transfer bail eccentric shaft (Page 21).
Transfer bail adjusting screw (Page 22).
Tape feed lever adjusting screw (Page 23).
Delay feed pawl operating lever (Page 26).
Delay push bail adjusting screw (Page 26).
Tape feed blocking arm lower extension (Page 27).
Tape feed blocking arm upper extension (Page 28).

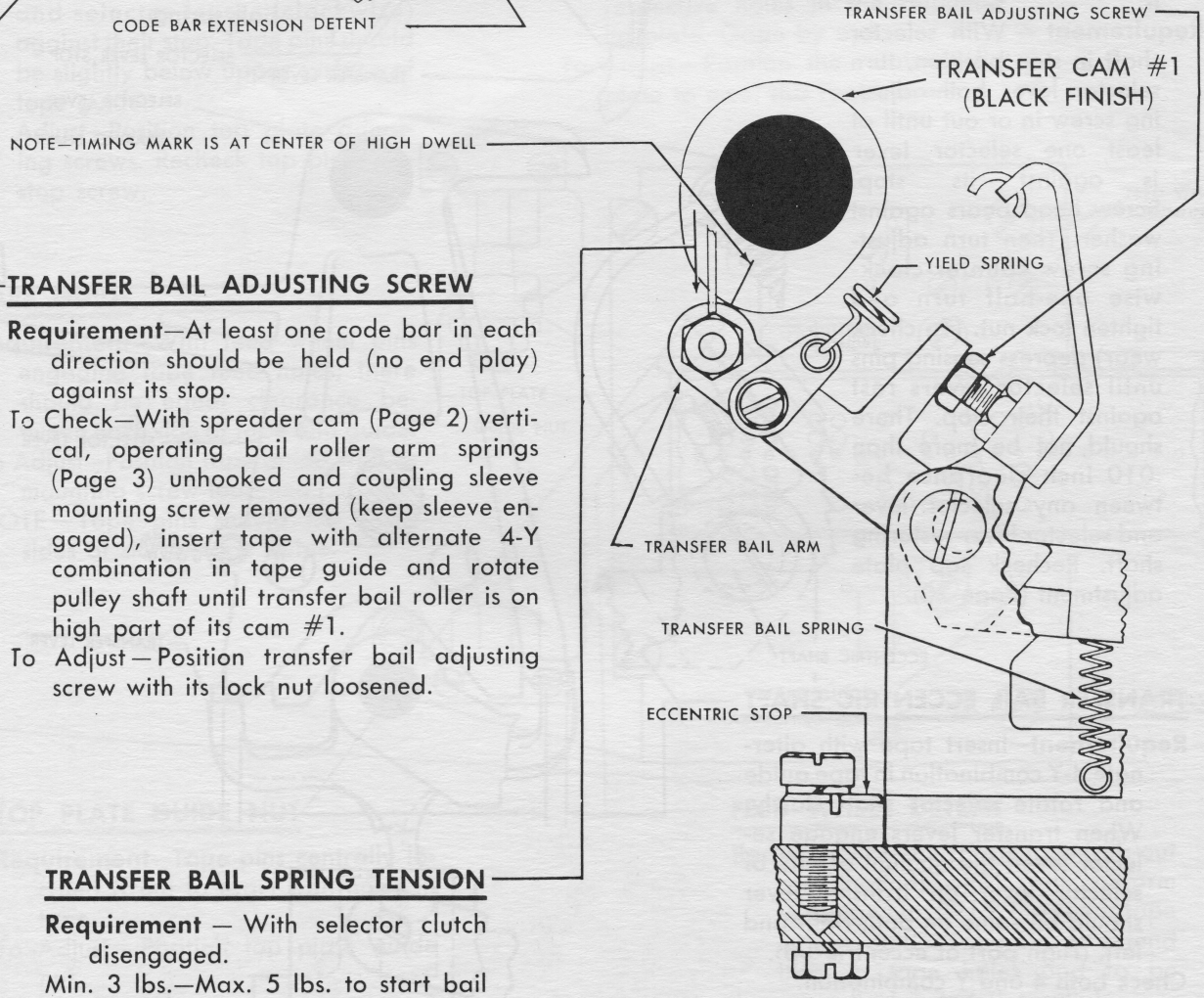

TRANSFER BAIL ADJUSTING SCREW

Requirement—At least one code bar in each direction should be held (no end play) against its stop.

To Check—With spreader cam (Page 2) vertical, operating bail roller arm springs (Page 3) unhooked and coupling sleeve mounting screw removed (keep sleeve engaged), insert tape with alternate 4-Y combination in tape guide and rotate pulley shaft until transfer bail roller is on high part of its cam #1.

To Adjust — Position transfer bail adjusting screw with its lock nut loosened.

TRANSFER BAIL SPRING TENSION

Requirement — With selector clutch disengaged.

Min. 3 lbs.—Max. 5 lbs. to start bail moving.

SELECTOR LEVER BAIL YIELD SPRING TENSION

Requirements—Selector levers bail roller on low part of cam #2.
Selector lever bail spring unhooked.
Min. 5½ lbs. Max. 7½ lbs. to start bail moving. Replace spring.

SELECTOR LEVER BAIL SPRING TENSION

Requirements—Selector lever bail roller on low part of cam #2.
Tape pins held down.
Min. 20 ozs.—Max. 28 ozs. to start bail moving.

SELECTOR LEVER SPRING TENSION

Requirements—Selector lever bail roller and transfer bail roller (Page 22) on low part of their respective cam, #2 and #1.
Selector lever bail held down to fully compress yield spring.
Min. 2¼ ozs. Max. 3¼ ozs. to start selector lever moving.

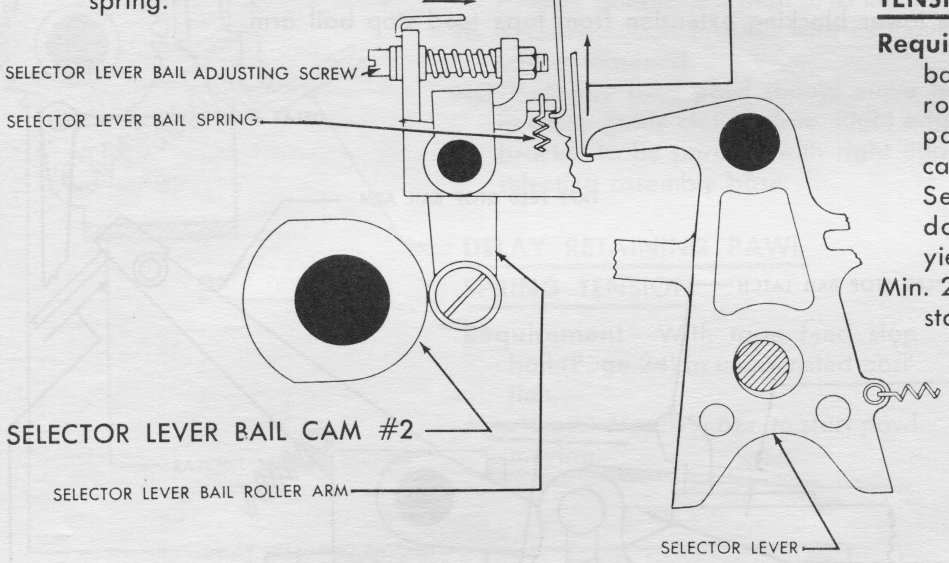

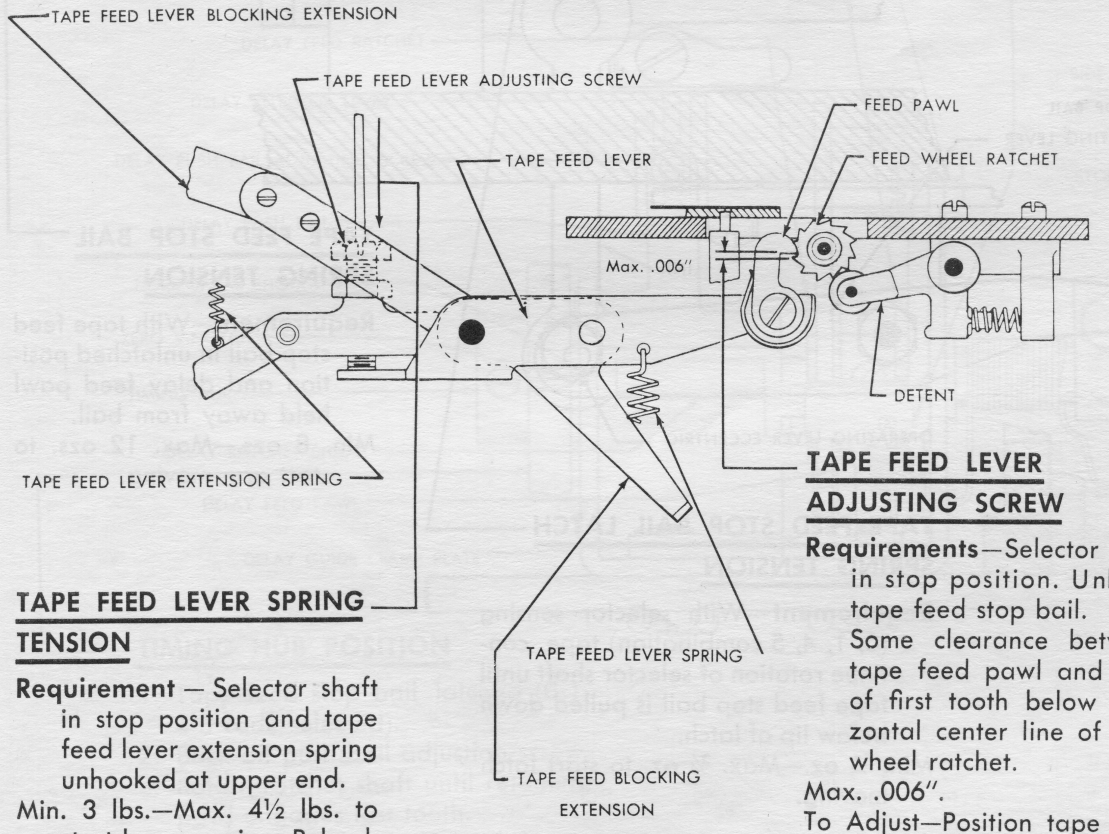

TAPE FEED LEVER ADJUSTING SCREW

Requirements—Selector shaft in stop position. Unlatch tape feed stop bail.
Some clearance between tape feed pawl and face of first tooth below horizontal center line of feed wheel ratchet.
Max. .006".
To Adjust—Position tape feed lever adjusting screw.

TAPE FEED LEVER SPRING TENSION

Requirement — Selector shaft in stop position and tape feed lever extension spring unhooked at upper end.
Min. 3 lbs.—Max. 4½ lbs. to start lever moving. Rehook spring.

TAPE FEED STOP BAIL OPERATING LEVER ECCENTRIC

Requirement—Insert tape with 0, 1, 4, 5 combination (UR) in tape guide. Rotate pulley shaft until depressing bail roller (Page 13) is on next low dwell of its cam. Clearance between tape feed stop bail latch and latching surface of tape feed stop bail.

Min. .008"—Max. .015".

To Adjust—Position operating lever eccentric.

NOTE—Depress upper tape feed blocking arm extension (Page 28) very lightly to free lower blocking extension from tape feed stop bail arm.

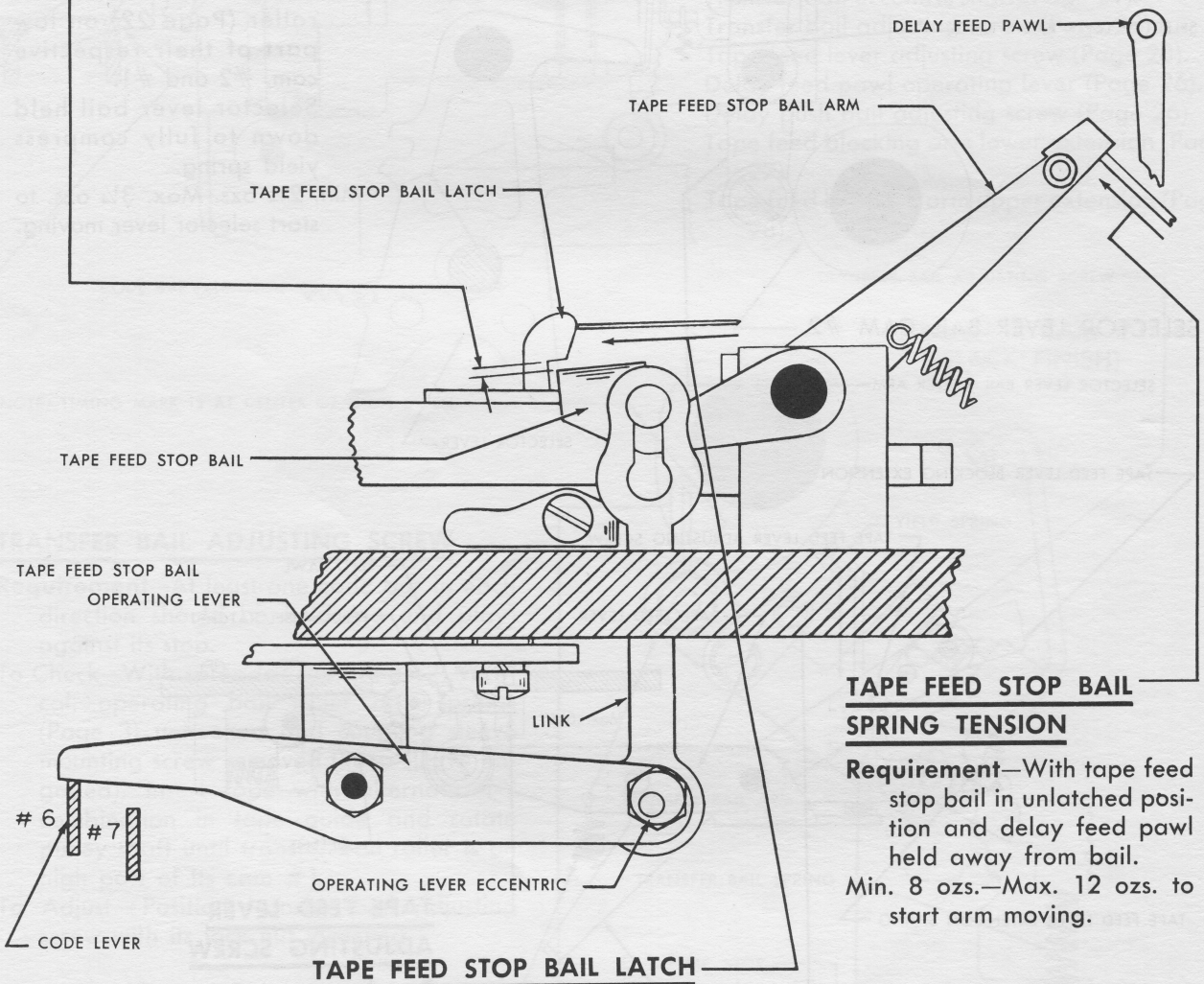

TAPE FEED STOP BAIL SPRING TENSION

Requirement—With tape feed stop bail in unlatched position and delay feed pawl held away from bail.

Min. 8 ozs.—Max. 12 ozs. to start arm moving.

TAPE FEED STOP BAIL LATCH SPRING TENSION

Requirement—With selector sensing (0, 1, 4, 5 combination) tape, continue rotation of selector shaft until tape feed stop bail is pulled down below lip of latch.

Min. ¼ oz.—Max. ¾ oz. to start latch moving.

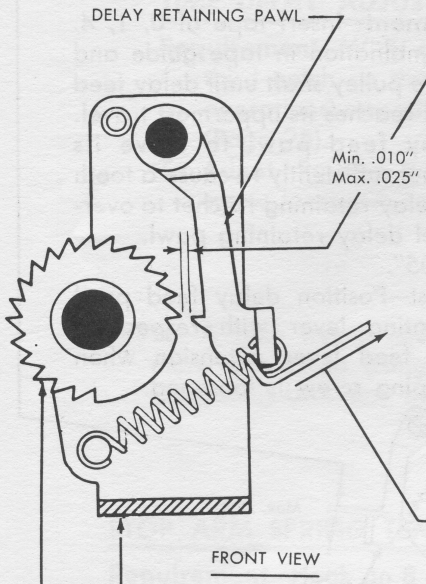

RATCHET BEARING BRACKET

Requirement—With depressing bail roller on low part of its cam, no tape in tape guide and tape feed stop bail in unoperated position, delay push bail adjusting screw should align with delay selector lever (Fig. below). Minimum clearance between delay retaining pawl and delay retaining ratchet, but not less than .010 inch.

To Adjust—Position bracket with its mounting screws loosened.

NOTE—Delay feed pawl should move freely in delay guide clamp plate. Right edge of bracket to be parallel with right edge of selecting assembly base.

DELAY RETAINING PAWL SPRING TENSION

Requirement — With tape feed stop bail (Page 24) in unoperated position,

Min. ½ oz.—Max. 1¼ ozs. to start pawl moving.

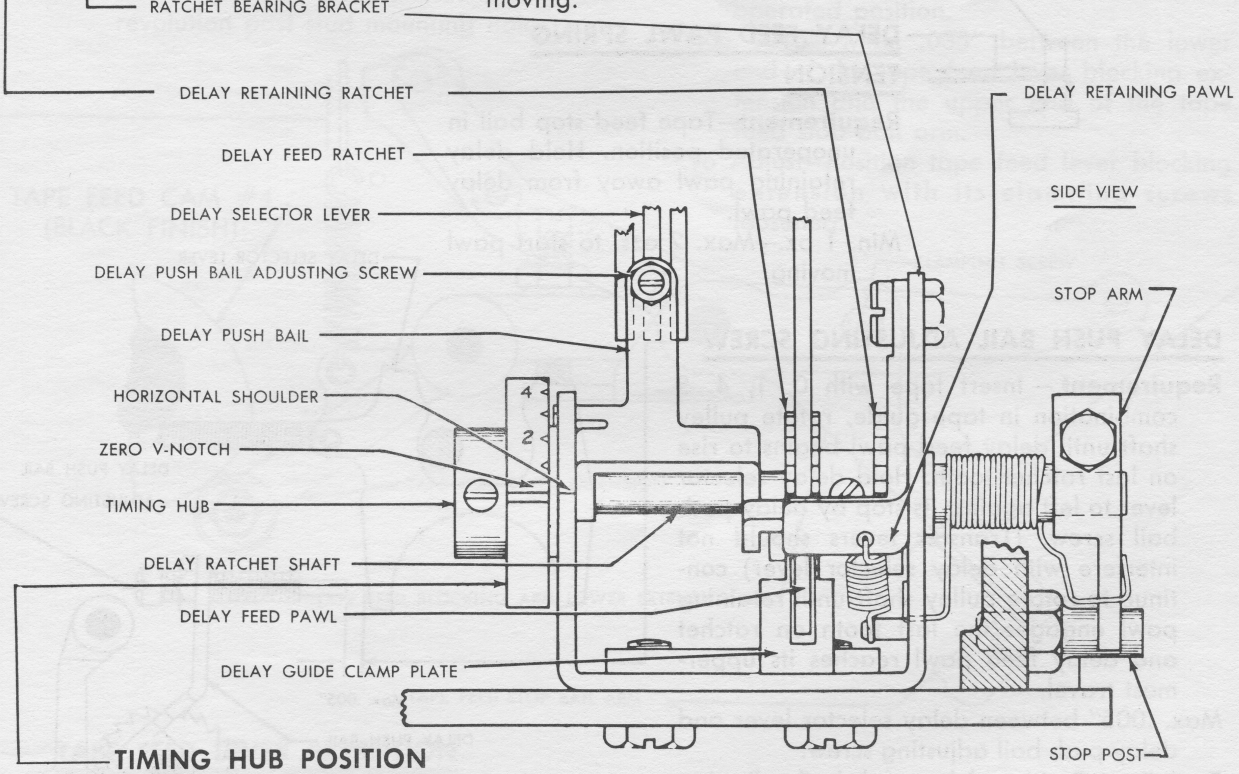

TIMING HUB POSITION

1. Tape feed stop bail latched (0-1-4-5 code selected).
2. Back off push bail adjusting screw.
3. Rotate ratchet shaft until retaining pawl engages last tooth.
4. Position hub to zero V notch by set screw.

DELAY FEED PAWL OPERATING LEVER

Requirement—Insert tape of 0, 1, 4, 5 combination in tape guide and rotate pulley shaft until delay feed pawl reaches its uppermost travel. Delay feed pawl to move its ratchet sufficiently to cause a tooth on delay retaining ratchet to overtravel delay retaining pawl.

Max. .005".

To Adjust—Position delay feed pawl operating lever with respect to tape feed lever extension when clamping screw is loosened.

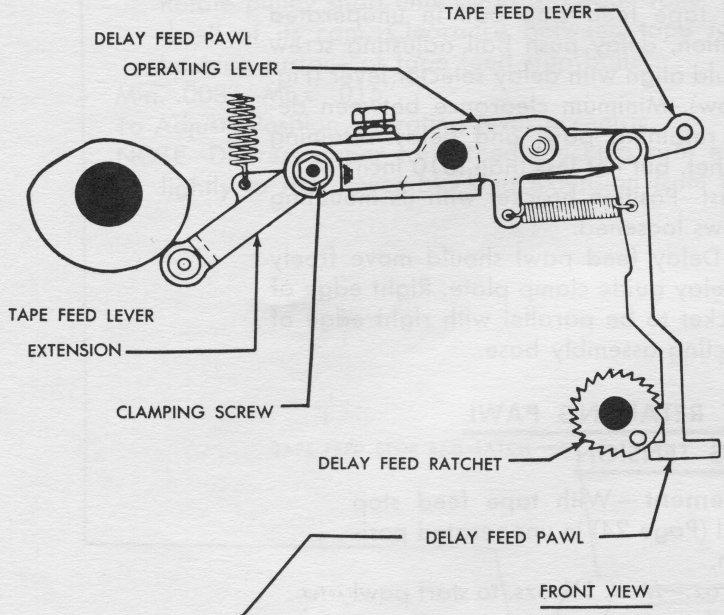

FRONT VIEW

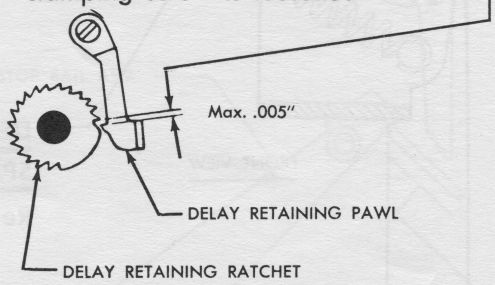

DELAY FEED PAWL SPRING TENSION

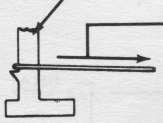

Requirement—Tape feed stop bail in unoperated position. Hold delay retaining pawl away from delay feed pawl.

Min. 1 oz.—Max. 2 ozs. to start pawl moving.

DELAY PUSH BAIL ADJUSTING SCREW

Requirement — Insert tape with 0, 1, 4, 5 combination in tape guide, rotate pulley shaft until delay feed pawl begins to rise on last ratchet tooth. Hold delay selector lever to left against its stop by delay push bail screw. (Transfer levers should not interfere with delay selector lever) continue to rotate pulley shaft until retaining pawl engages the last tooth on ratchet and delay feed pawl reaches its uppermost travel.

Max. .005" between delay selector lever and delay push bail adjusting screw.

To Adjust—Position delay push bail adjusting screw.

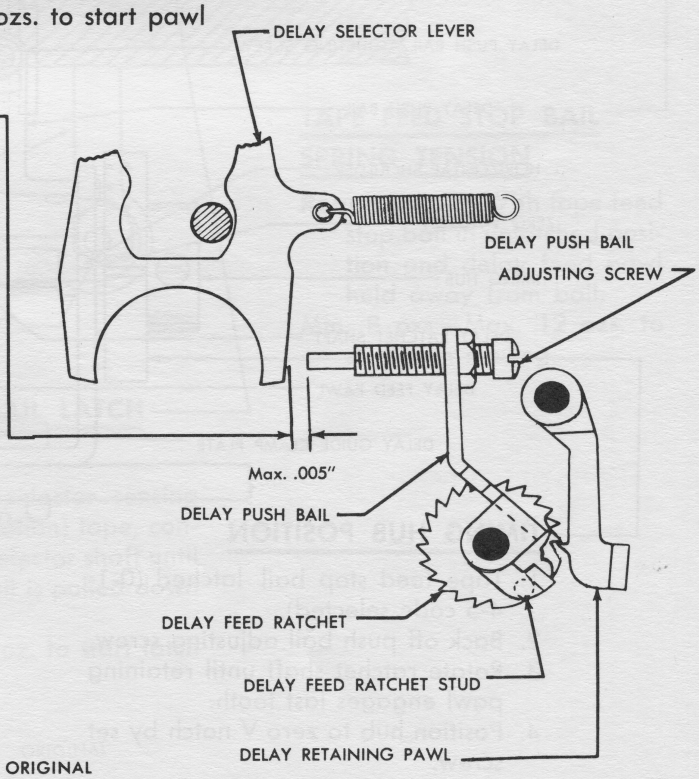

ORIGINAL

TIME DELAY ADJUSTMENT

Requirement—With delay mechanism unoperated, center third notch on timing hub (representing required delay operations) opposite horizontal shoulder of delay bracket (Page 25).

To Adjust—Position timing hub with its stop arm clamping screw loosened and the stop arm against its stop post.

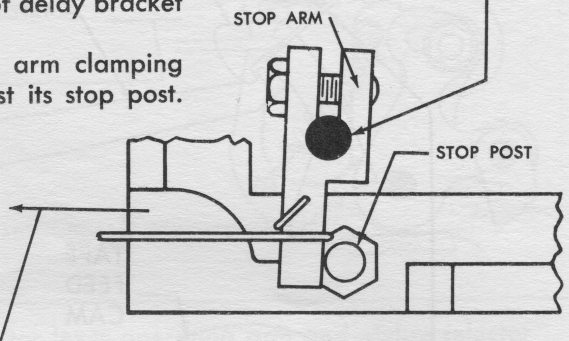

NOTE—A time delay equivalent to one or more operations (range 0 to 18) of the Operating Unit may be set up.

STOP ARM SPRING TENSION

Requirement—Hook an 8 oz. scale over stop arm.

Min. 4 ozs.—Max. 7 ozs. to start arm moving.

To Adjust—Remove stop arm stud and release all spring tension. Seat both ends of spring and rotate stop arm to wind spring one revolution past stud mounting hole.

TAPE FEED LEVER BLOCKING EXTENSION

Requirement—Tape with UR coding in the tape guide. Rotate the pulley shaft until the tape feed cam follower is on the high dwell of the tape feed cam #4. Manually latch the tape feed bail in its operated position.

Min. .015"—Max. .035" between the lower end of the tape feed lever blocking extension and the upper end of the tape feed stop bail arm.

To Adjust—Position tape feed lever blocking extension with its clamping screws loosened.

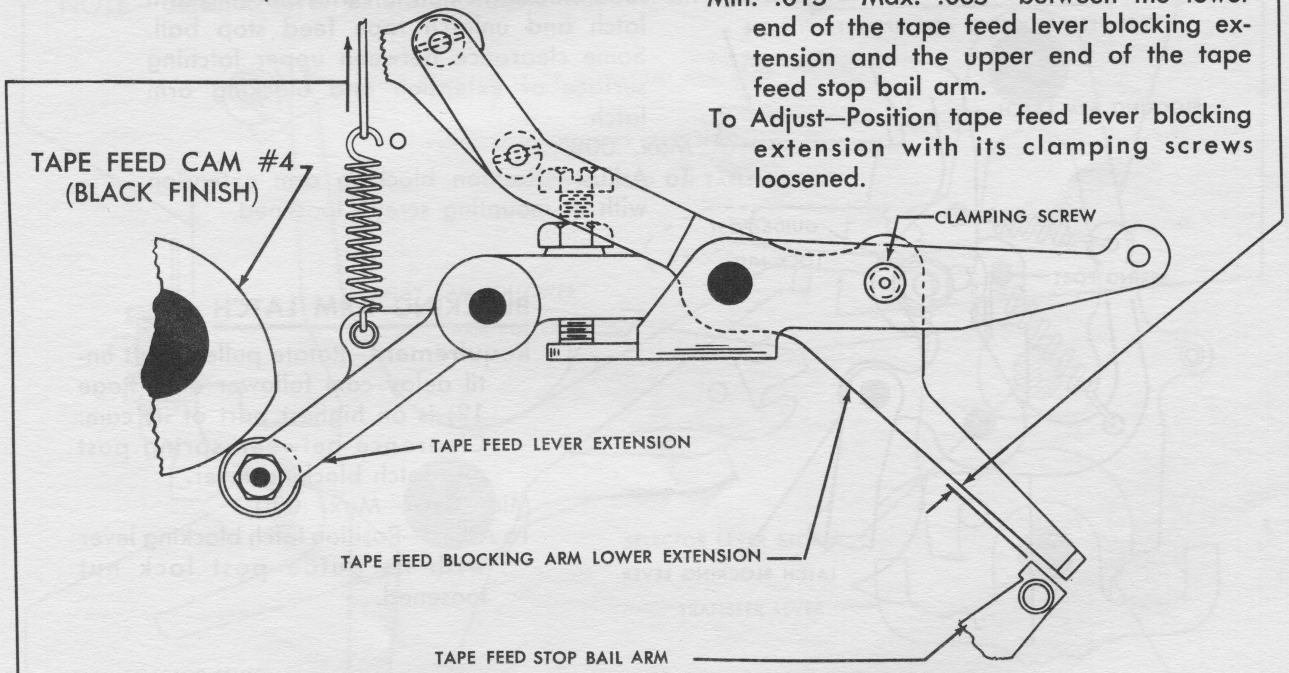

TAPE FEED LEVER EXTENSION SPRING TENSION

Requirement—Rotate pulley shaft until tape feed lever extension roller is on low part of its cam #4.

Min. 16 ozs.—Max. 32 ozs. to stretch spring to its installed length.

NOTE—Replace tape feed upper blocking arm.

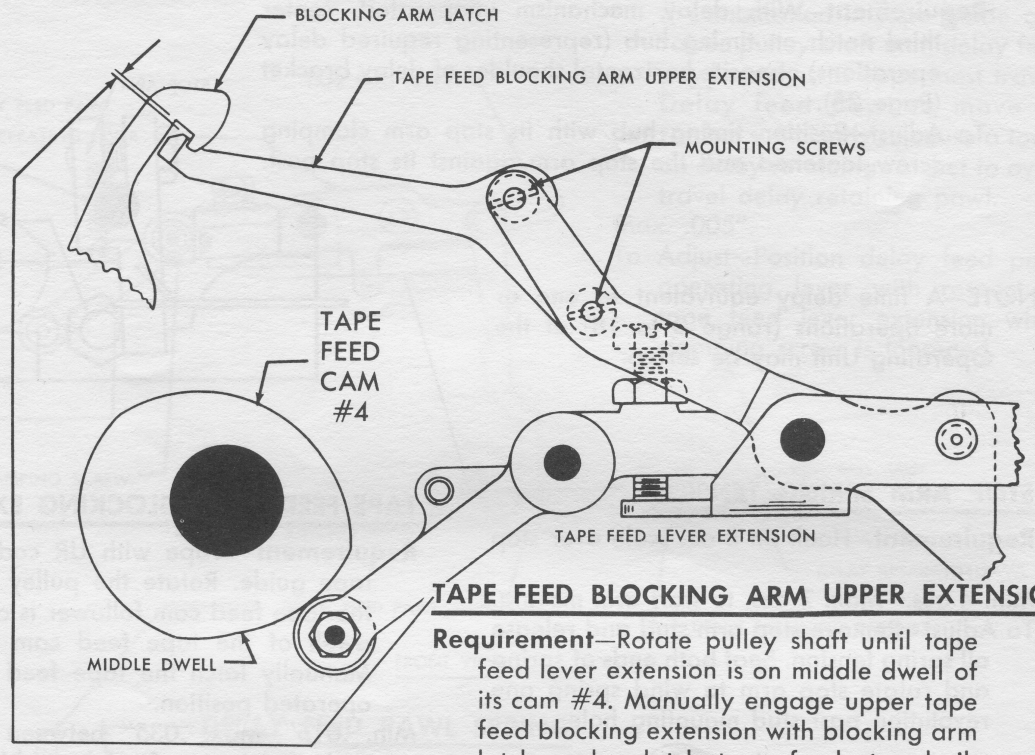

TAPE FEED BLOCKING ARM UPPER EXTENSION

Requirement—Rotate pulley shaft until tape feed lever extension is on middle dwell of its cam #4. Manually engage upper tape feed blocking extension with blocking arm latch and unlatch tape feed stop bail. Some clearance between upper latching surface of extension and blocking arm latch.

Max. .008".

To Adjust — Position blocking arm extension with its mounting screws loosened.

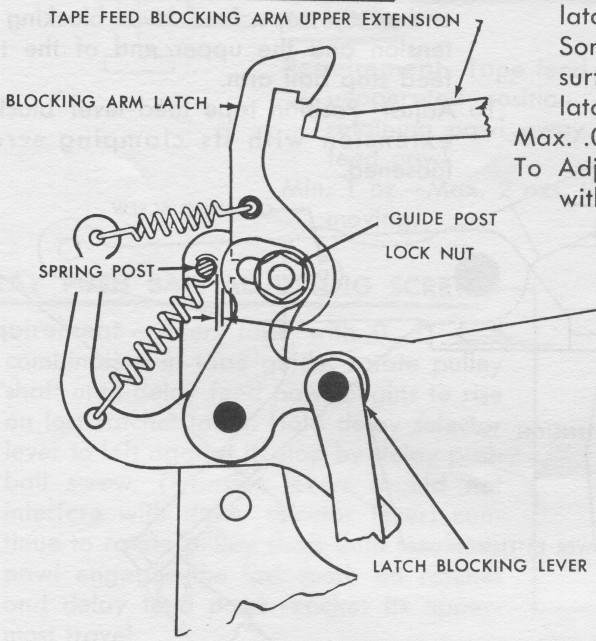

BLOCKING ARM LATCH

Requirement—Rotate pulley shaft until delay cam follower arm (Page 12) is on highest part of its cam. Clearance between spring post and latch blocking lever.

Min. .020"—Max. .030".

To Adjust—Position latch blocking lever with its guide post lock nut loosened.

RECHECK-TAPE FEED STOP BAIL OPERATING LEVER ECCENTRIC

Requirement — Insert tape with "0" coding (thin space) in tape guide. Rotate drive shaft until depressing bail roller is on next low dwell of cam. Clearance between the lip of latch and tape feed stop bail.

Min. .008".

To Adjust—Check the following:

Tape feed stop bail operating lever eccentric (Page 24).

Tape feed upper blocking arm extension (Page 28).

Delay selector lever operating arm stop (Page 29).

BLOCKING ARM LATCH SPRING TENSION

Requirement—With any letter combination selected, rotate pulley shaft until tape feed lever extension (Page 28) is on high dwell of its cam #4.

Min. 3 ozs.—Max. 5 ozs. to start latch moving.

LATCH RELEASE ARM SPRING TENSION

Requirement—With any letter combination selected, rotate pulley shaft until tape feed lever extension (Page 28) is on high dwell of its cam #4.

Min. ½ oz.—Max. 1½ ozs. to start arm moving.

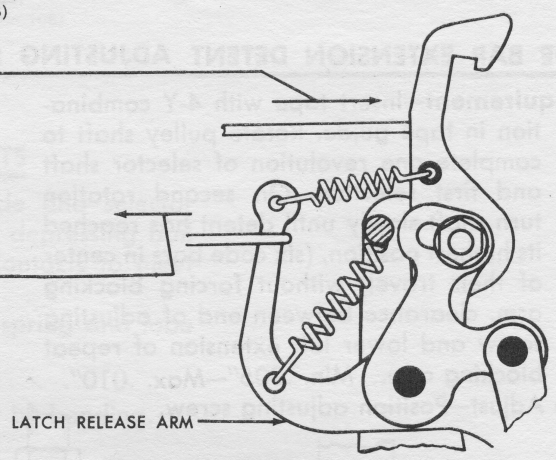

DELAY SELECTOR LEVER OPERATING ARM

Requirement—Some clearance between delay selector lever operating arm and delay selector lever extension. Max. .005".

To Check—With no tape in tape guide, tape feed stop bail (Page 24) unlatched, and selector shaft in stop position, move repeat blocking arm to right. Rotate selector shaft 180° (approx.) with function blocking arm moved to left so that follower arm left extension rests on repeat blocking arm (Page 8).

To Adjust—Position adjusting screw with its lock nut loosened.

DELAY SELECTOR LEVER OPERATING ARM SPRING TENSION

Requirement—Same as "To Check" on above adjustment.

Min. 14 ozs.—Max. 20 ozs. to start delay selector operating arm moving.

NOTE—Selector lever extension should not rest on operating arm.

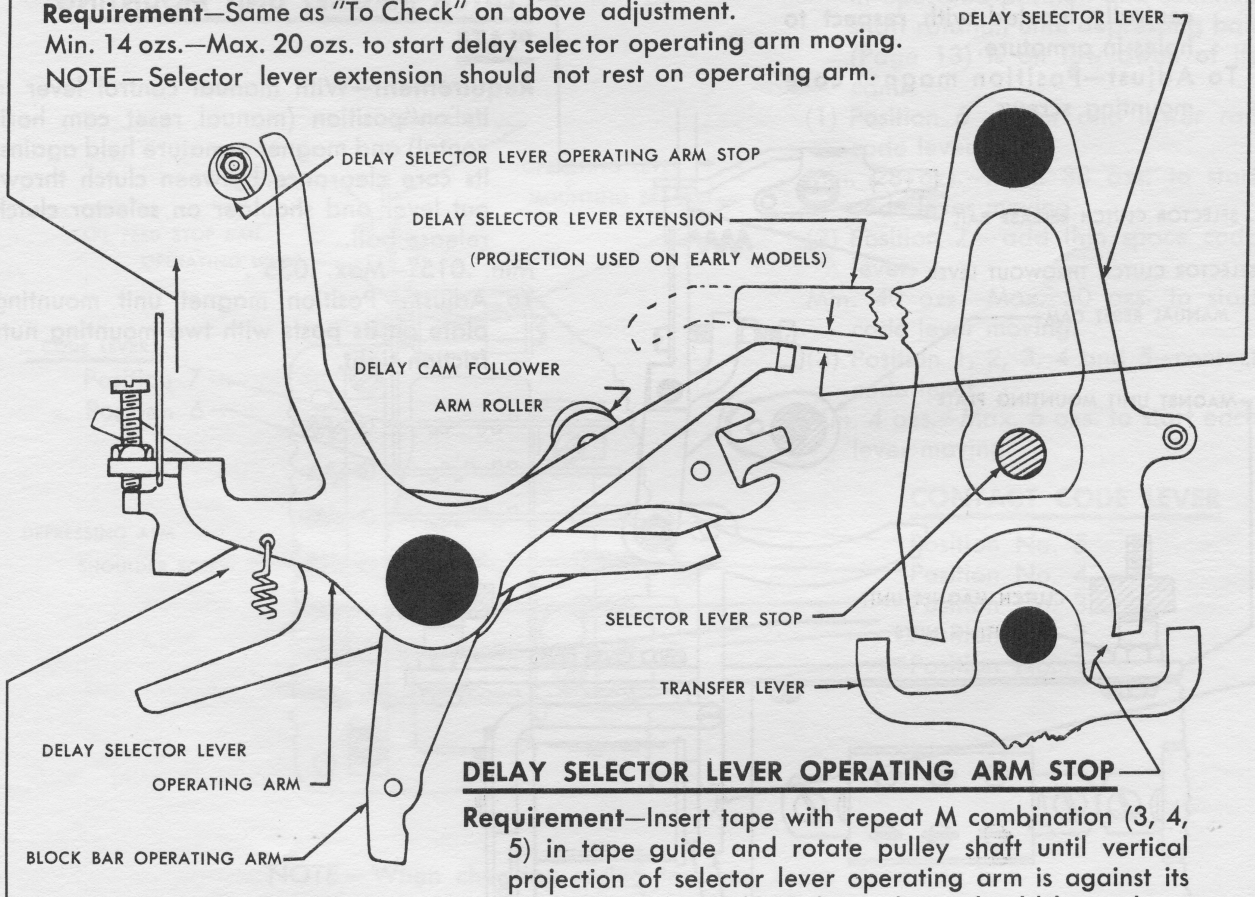

DELAY CAM FOLLOWER ARM ASSEMBLY

DELAY SELECTOR LEVER OPERATING ARM STOP

Requirement—Insert tape with repeat M combination (3, 4, 5) in tape guide and rotate pulley shaft until vertical projection of selector lever operating arm is against its (eccentric) stop. Delay selector lever should be midway between its right and left stop position—gauge by eye.

To Adjust—Position stop (eccentric) with its lock nut loosened.

CODE BAR EXTENSION DETENT ADJUSTING SCREW

Requirement—Insert tape with 4-Y combination in tape guide. Rotate pulley shaft to complete one revolution of selector shaft and first selection. On second rotation turn shaft slowly until detent has reached its highest position, (six code bars in center of their travel) without forcing blocking arm, clearance between end of adjusting screw and lower left extension of repeat blocking arm. Min. .005"—Max. .010".

To Adjust—Position adjusting screw.

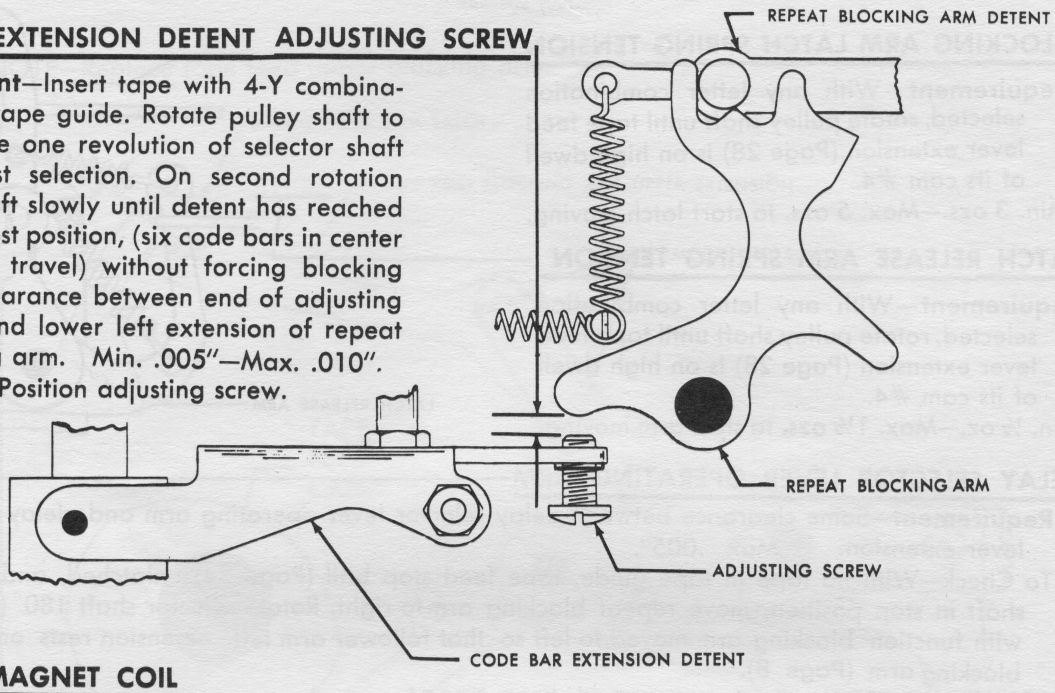

CLUTCH MAGNET COIL

Requirement—Magnet armature held against its cores. Projection on core centrally located with respect to holes in armature.

To Adjust—Position magnet core mounting screws.

CLUTCH MAGNET UNIT MOUNTING PLATE

Requirement—With manual control lever in its "on" position (manual reset cam horizontal) and magnet armature held against its core clearance between clutch throwout lever and shoulder on selector clutch release bail.

Min. .015"—Max. .035".

To Adjust — Position magnet unit mounting plate on its posts with two mounting nuts friction tight.

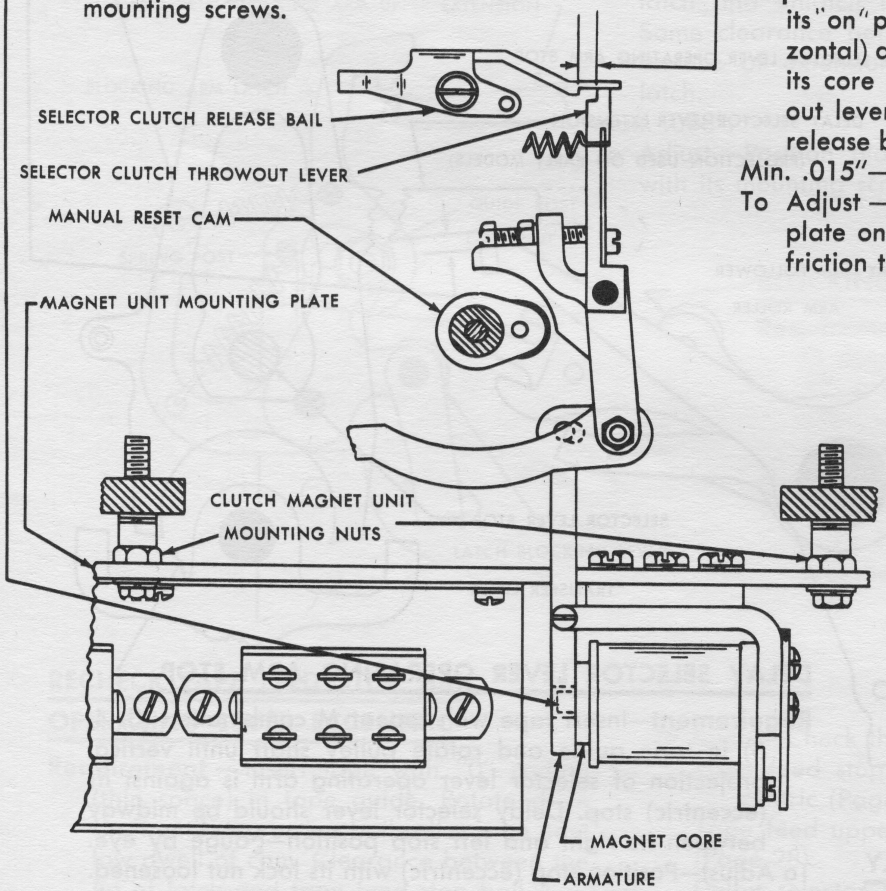

CODE LEVER AND FUNCTION CONTACTS

Requirement — With no tape in tape guide and selector clutch engaged, rotate pulley shaft until depressing bail (Page 13) is on low part of its cam. Contacts to meet squarely.

(1) Clearance between tip of lower contact spring and lobe of code lever.

Min. .010"—Max. .030".

To Adjust—Position lower spring and stiffener by bending.

(2) Contact gap.

Min. .020"—Max. .030".

To Adjust—Position upper contact spring by bending.

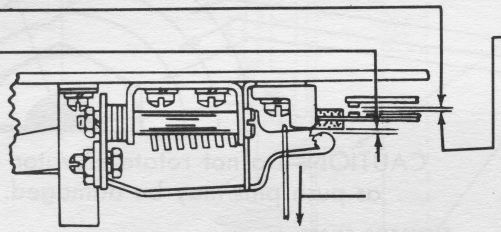

CODE LEVER SPRING TENSION

Requirement—With no tape in tape guide, rotate pulley shaft until tape feed lever extension (Page 27) is on high dwell of its cam. Manually latch tape feed stop bail (Page 24) in operated position and continue shaft rotation until depressing bail (Page 13) is on low dwell of its cam.

(1) Position 6—upper and lower rail code lever.

Min. 28 ozs.—Max. 38 ozs. to start code lever moving.

(2) Position 7 — add thin space code lever.

Min. 40 ozs.—Max. 50 ozs. to start code lever moving.

(3) Position 1, 2, 3, 4 and 5—contact code lever.

Min. 4 ozs.—Max. 6 ozs. to start each lever moving.

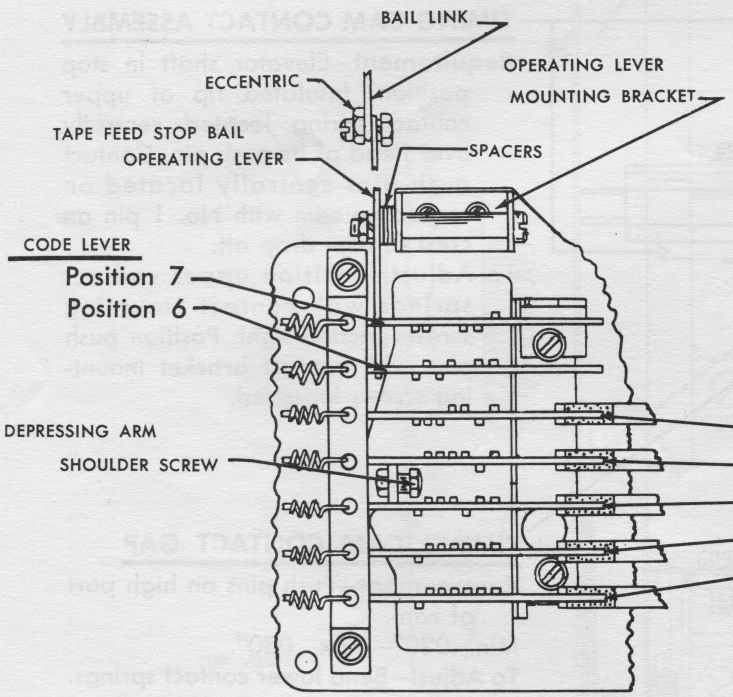

CONTACT CODE LEVER

Position No. 5
Position No. 4
Position No. 3
Position No. 2
Position No. 1

NOTE — When checking spring tensions, some clearance is necessary between each code lever and its contact spring.

NOTE—Requirements on this page apply to Comet linecasting machines only.

TIMING CAM ASSEMBLY

Requirement—With elevator shaft in stop position, zero degree line of timing cam should be vertical with each cam drop off in upper right quadrant. (Rear view.)

To Adjust—Position cam assembly on elevator shaft with oiler clamp loosened.

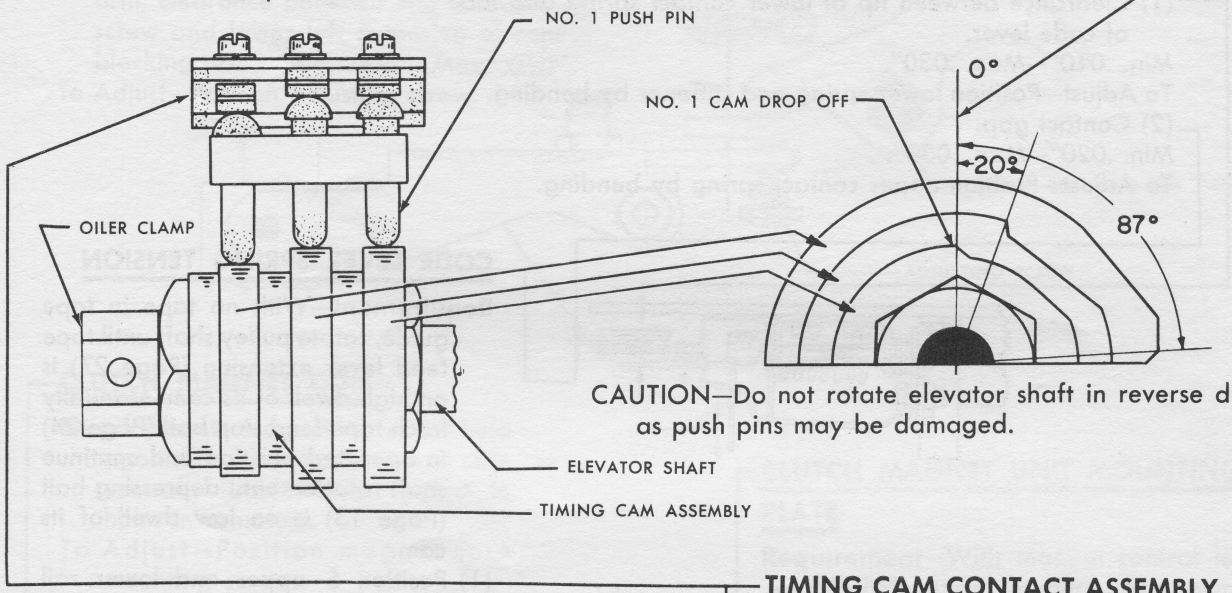

CAUTION—Do not rotate elevator shaft in reverse direction as push pins may be damaged.

TIMING CAM CONTACT ASSEMBLY

Requirement—Elevator shaft in stop position. Insulated tip of upper contact spring located centrally over head of its push pin. Contact push pins centrally located on respective cam with No. 1 pin on crest of cam drop off.

To Adjust—Position upper contact springs with contact mounting screws friction tight. Position push pins with contact bracket mounting screws loosened.

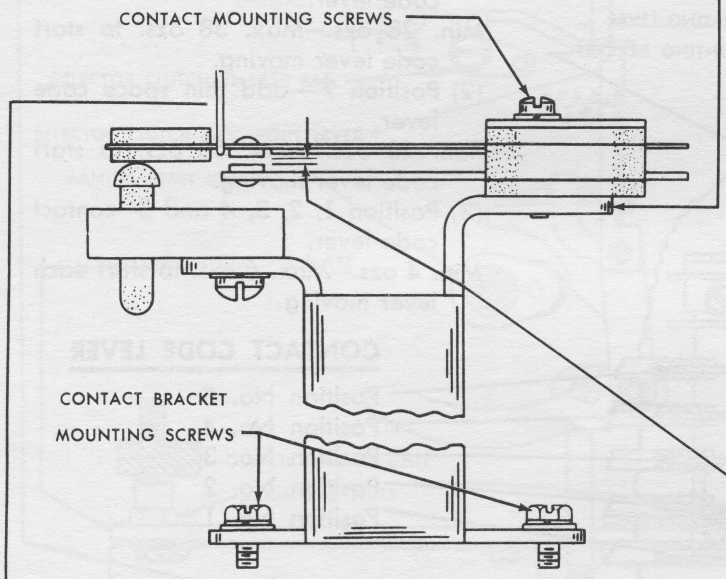

TIMING CAM CONTACT GAP

Requirement—Push pins on high part of cam.

Min. .020"—Max. .030".

To Adjust—Bend lower contact springs.

TIMING CAM CONTACT SPRING TENSION

Requirement—Push pin on low part of cam.

Min. 4½ ozs.—Max. 5½ ozs. to open contacts.

To Adjust—Bend upper contact spring near its mounting.

MOUNT THE OPERATING UNIT ON THE SLUG LINECASTING MACHINE AS FOLLOWS:

Remove two hanger pilot screws from Operating Unit.
Back off knurled clamp screw mounted on keyboard base casting and two stop screws projecting from left or right hanger.
Raise assembling elevator to its mid-position where it will be supported by elevator latch.
Place both arms under Operating Unit, supporting it on the hands and forearms. Position Operating Unit under keyboard so that openings in hangers will align with hanger guides and slide in place. Insert hanger pilot screws.

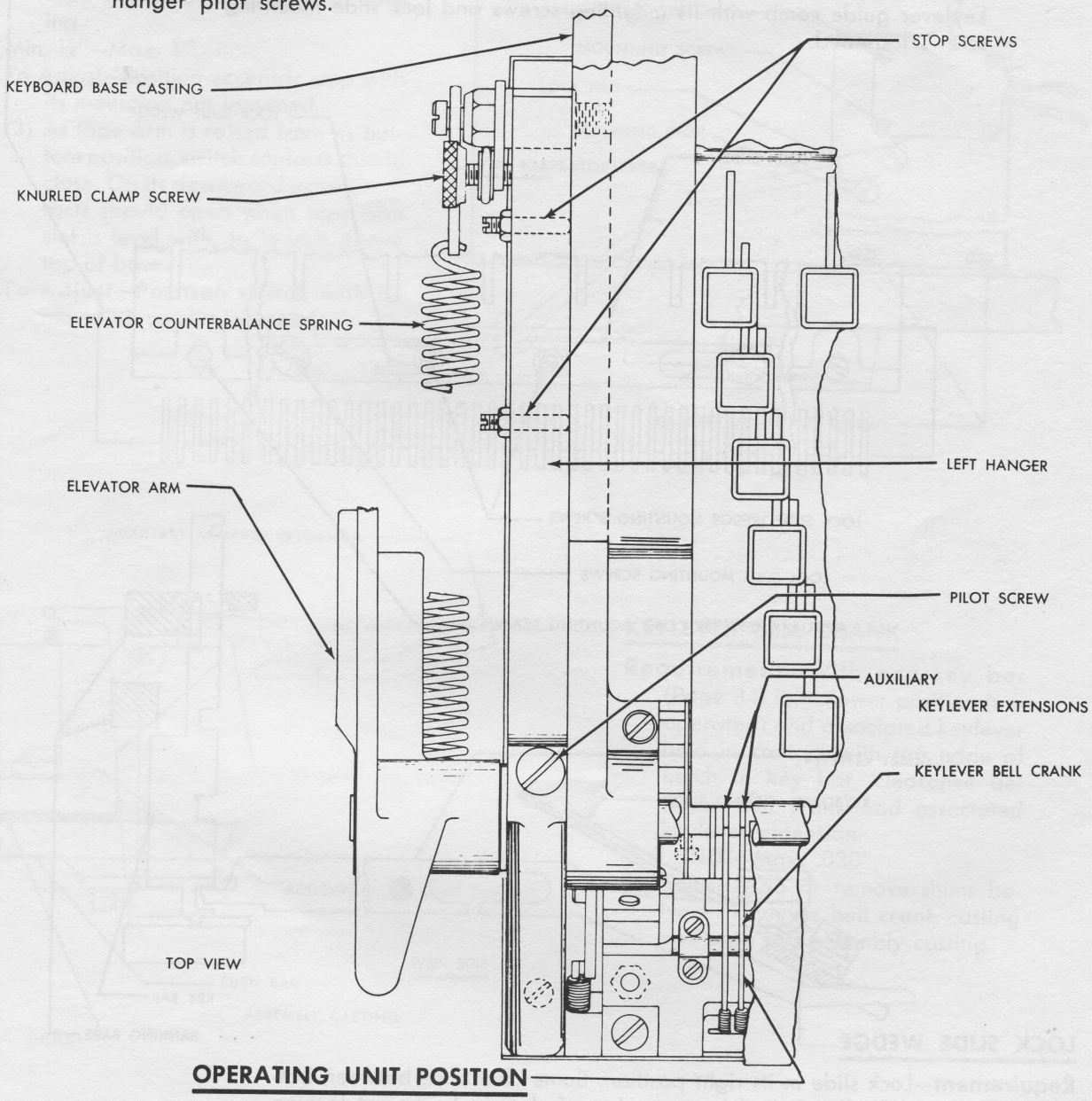

OPERATING UNIT POSITION

Requirement—Keylever bell cranks should align with auxiliary keylever extensions.
To Adjust — Position Operating Unit by its stop screws and clamp screw. If necessary reposition the hangers.

Following two adjustments apply only to Operating Units installed on Linotype machines.

AUXILIARY KEYLEVER GUIDE COMB

Requirement—With lock slide moved to left and any keylever depressed, corresponding key bar should be stopped in its upward travel by banking bar. Releasing keylever should allow corresponding key bar to fully return and rest on banking bar.

To Check—Remove front and rear cam frames from linecasting machine.

To Adjust—Move right end of lock slide wedge to its lowest position with its mounting screws loosened. Tighten cam mounting screws and position keylever guide comb with its mounting screws and lock slide mounting screws loosened.

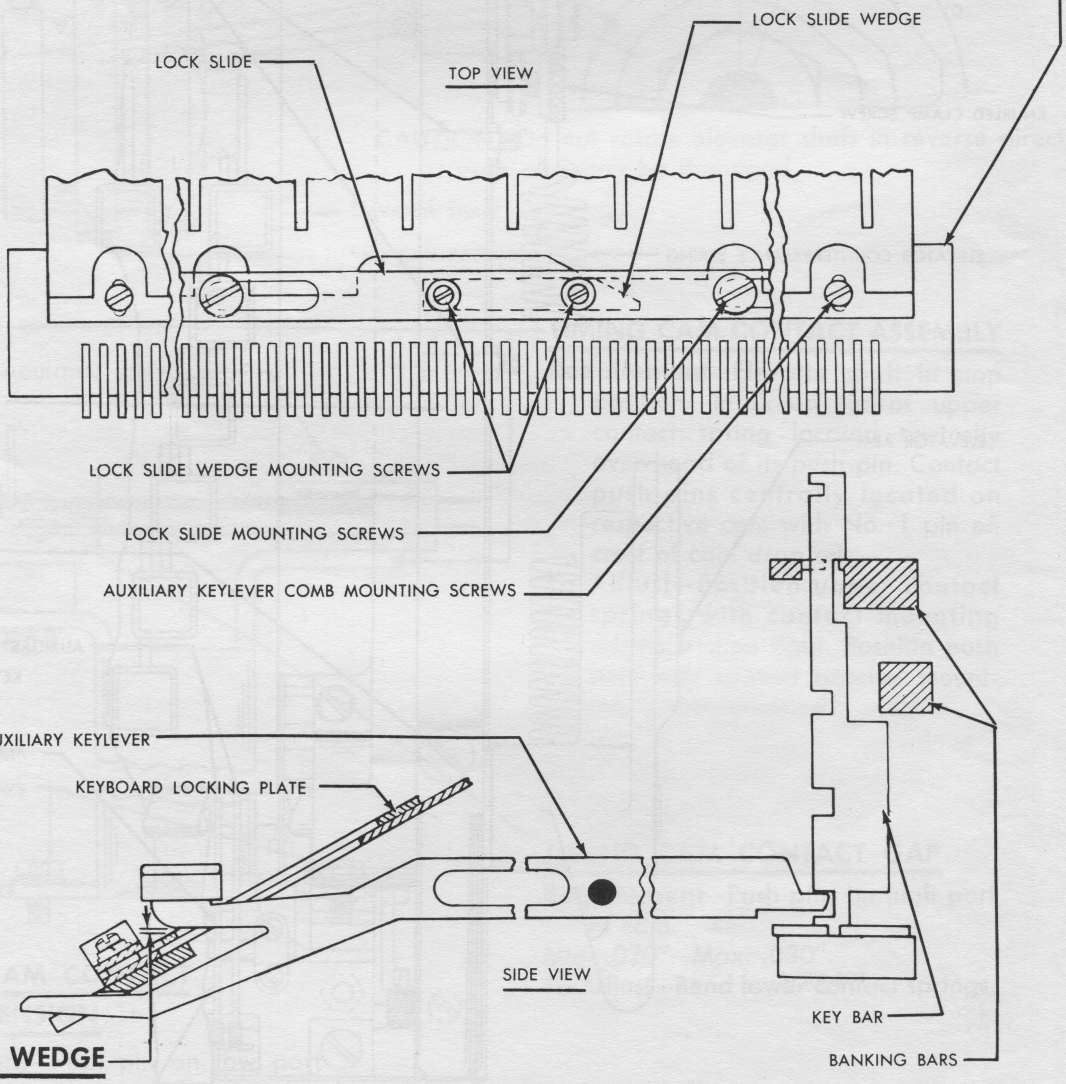

LOCK SLIDE WEDGE

Requirement—Lock slide in its right position. Some clearance between bottom edge of keylevers and bottom edge of slots in keyboard locking plate.

Max. .040″.

To Adjust — Position lock slide wedge in lock slide with mounting screws loosened.

TIGHT TAPE SWITCH ASSEMBLY

Requirement—(1) Major axis of tape arm slot parallel with plane of tape guide.

To Adjust—Position tight tape arm with its lock nut loosened.

(2) Tape arm position—major axis of tape slot below top of base casting.

Min. ½"—Max. 1".

To Adjust—Position eccentric stop with its mounting nut loosened.

(3) As tape arm is raised from its bottom position, switch contacts should close. On its downward travel, contacts should open when tape arm slot is level with, to ½ inch above top of base.

To Adjust—Position switch with its mounting screws loosened.

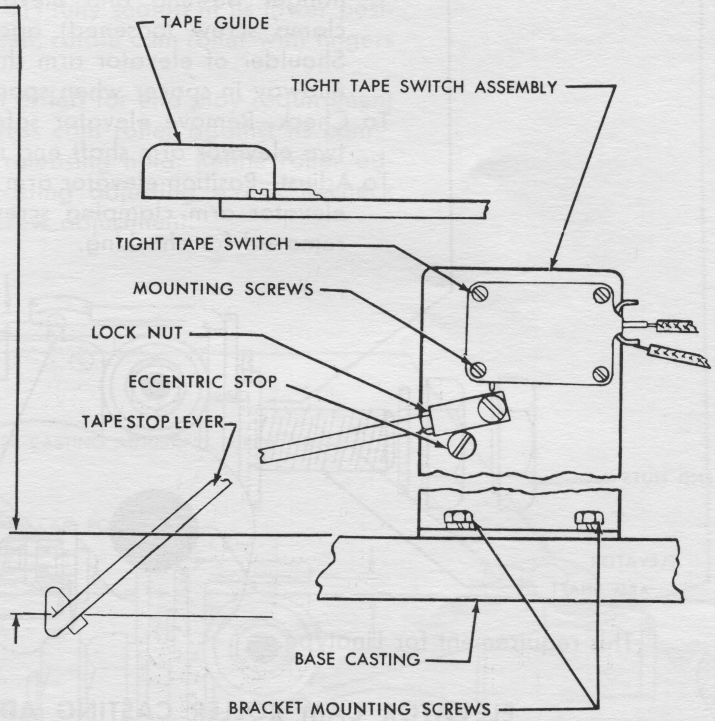

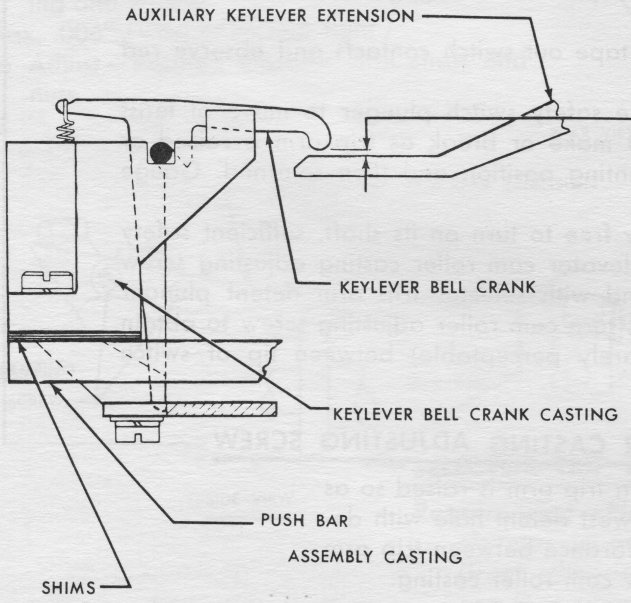

KEYLEVER BELL CRANK

Requirement—With any key bar (Page 34) in its lower position (unoperated) and associated keylever held in contact with top edge of notch in key bar, clearance between bell crank and associated keylever extension.

Min. .010"—Max. .030".

To Adjust—Add or remove shims between keylever bell crank casting and push bar assembly casting.

ELEVATOR ARM SHAFT (COMET LINECASTING MACHINE ONLY)

Requirement — Hold elevator arm (Page 33) against left hanger bushing and elevator handle assembly (with clamp screw loosened) against right hanger bushing. Shoulder of elevator arm shaft should extend (approx.) midway in spacer when spacer is against trip arm.

To Check—Remove elevator safety spring plug and spring, two elevator arm shaft end nuts and small washer.

To Adjust—Position elevator arm shaft (right or left) with two elevator arm clamping screws loosened. Replace parts removed for checking.

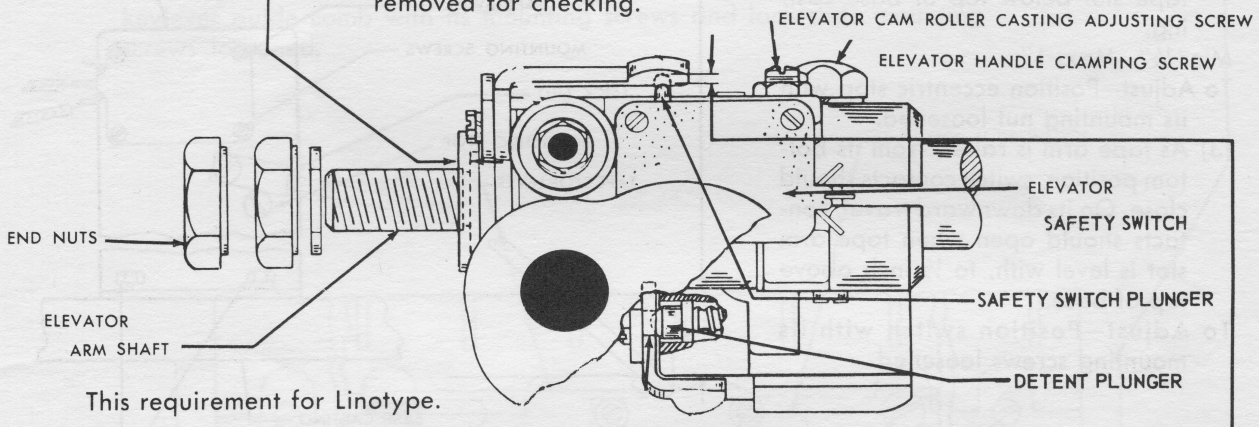

This requirement for Linotype.

ELEVATOR CAM ROLLER CASTING ADJUSTING SCREW

Requirement—(1) Elevator safety switch contacts open when front extension of selector trip arm is raised so that detent plunger engages lowest hole and closed when trip arm is depressed to engage detent with next-to-lowest hole.

To Check—Open tight tape and tape out switch contacts and observe red signal lamp on upper panel.

(2) Trip arm lug should cause safety switch plunger to move at least .010 inch beyond contact make or break as trip arm is raised or lowered from either detenting position and then returned. Gauge by eye.

To Adjust—With handle assembly free to turn on its shaft, sufficient safety spring compression to hold elevator cam roller casting adjusting screw against handle projection and with selector trip arm detent plunger engaging next-to-lowest hole, turn cam roller adjusting screw to obtain minimum clearance (light barely perceptable) between tip of switch plunger and lug.

ELEVATOR CAM ROLLER CASTING ADJUSTING SCREW

This requirement for Intertype.

Requirement—When trip arm is raised so as to engage its lowest detent hole with detent plunger, clearance between trip arm lug and elevator cam roller casting.

Min. .020"—Max. .030".

To Adjust — Loosen elevator clamp screw to free handle on its shaft. With sufficient tension on safety spring to hold elevator casting screw against elevator handle casting, position the adjusting screw.

ELEVATOR HANDLE AND CAM ROLLER

Requirement—Elevator cam roller should rest firmly on low part of its cam and elevator arm shaft should have minimum end play without binding in any operating position.

To Check—With assembling elevator (Page 41) fully seated in its lower position and elevator cam shaft in stop position, rotate cam roller with fingers (no downward pressure).

To Adjust—Position handle assembly to right or left for end play requirement and gently lift elevator handle to depress cam roller against its cam—tighten handle clamping screw before releasing hold. Refine roller adjustment if required with cam roller casting adjusting screw. Recheck elevator cam roller casting adjusting screw adjustment.

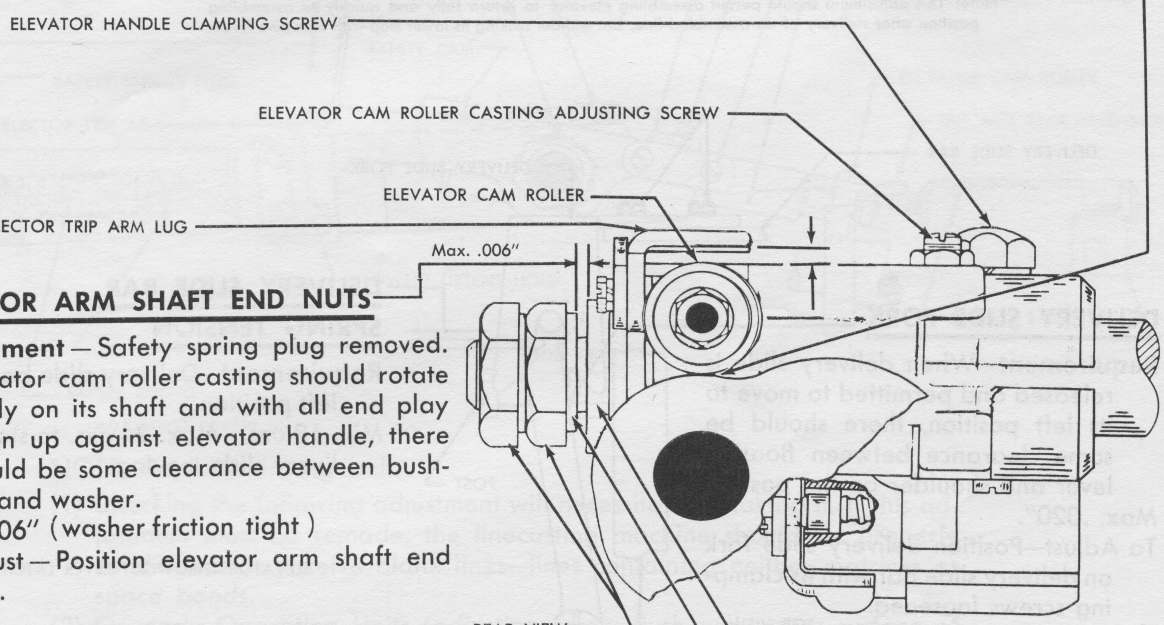

REAR VIEW

ELEVATOR ARM SHAFT END NUTS

Requirement — Safety spring plug removed. Elevator cam roller casting should rotate freely on its shaft and with all end play taken up against elevator handle, there should be some clearance between bushing and washer.

Max. .006" (washer friction tight)

To Adjust — Position elevator arm shaft end nuts.

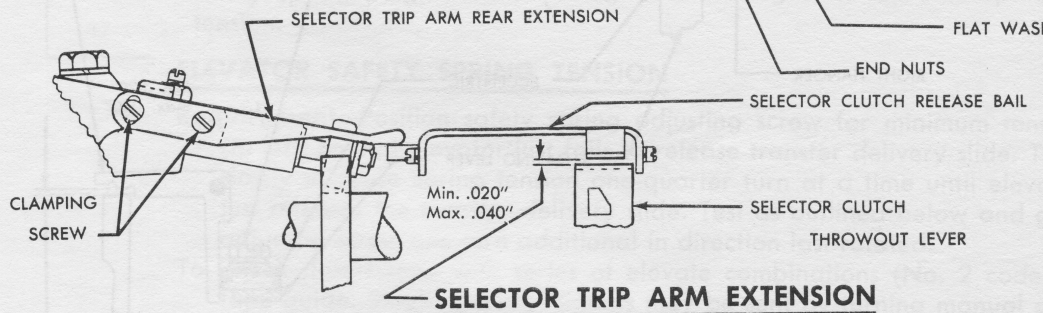

SIDE VIEW

SELECTOR TRIP ARM EXTENSION

Requirement — Elevator shaft in stop position, assembling elevator in assembling position and selector trip arm (front extension) detented in lowest hole. Selector trip arm rear extension should hold selector clutch release bail clear of selector clutch throwout lever.

Min. .020"—Max. .040".

To Adjust—Position rear extension of trip arm with its clamping screws loosened.

ELEVATOR COUNTERBALANCE SPRING TENSION

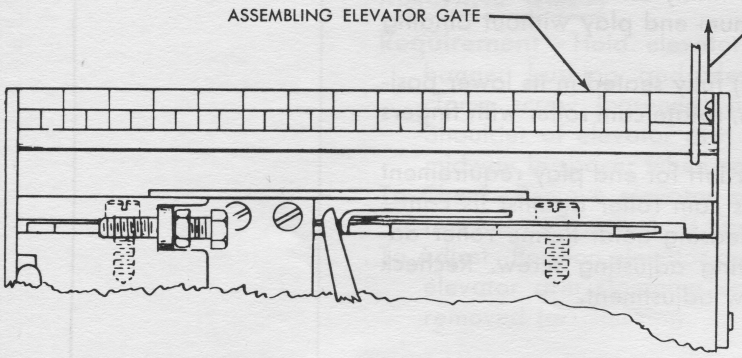

Requirement—Hook a 32 oz. scale beneath gate.

Min. 12 ozs.—Max. 20 ozs. to start assembling elevator moving.

To Adjust—Remove loop end of couterbalance spring from elevator arm projection and place in next hole (toward shoulder screw for increased tension).

NOTE — This adjustment should permit assembling elevator to return fully and quickly to assembling position after delivery of an assembled line, but without striking its lower stop with excessive force.

Note: This adjustment should permit assembling elevator to return fully and quickly to assembling position after delivery of an assembled line, but without striking its lower stop with excessive force.

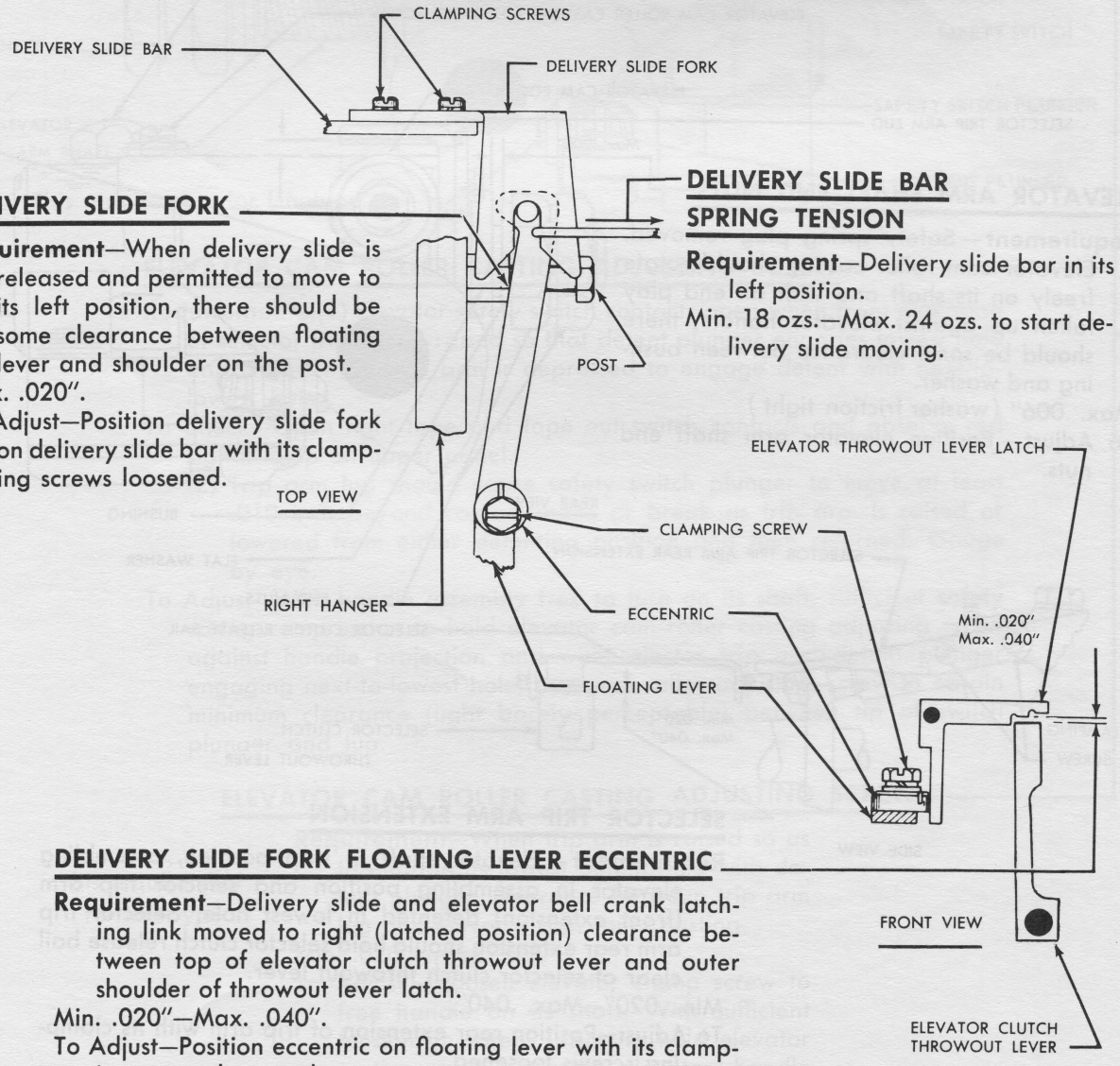

DELIVERY SLIDE FORK

Requirement—When delivery slide is released and permitted to move to its left position, there should be some clearance between floating lever and shoulder on the post.

Max. .020".

To Adjust—Position delivery slide fork on delivery slide bar with its clamping screws loosened.

DELIVERY SLIDE BAR SPRING TENSION

Requirement—Delivery slide bar in its left position.

Min. 18 ozs.—Max. 24 ozs. to start delivery slide moving.

DELIVERY SLIDE FORK FLOATING LEVER ECCENTRIC

Requirement—Delivery slide and elevator bell crank latching link moved to right (latched position) clearance between top of elevator clutch throwout lever and outer shoulder of throwout lever latch.

Min. .020"—Max. .040".

To Adjust—Position eccentric on floating lever with its clamping screws loosened.

SELECTOR TRIP ARM DETENT SPRING TENSION

Requirement — With elevator shaft in stop position, move selector trip arm so that detent plunger engages lowest hole. Hold selector clutch release bail away from rear extension of selector trip arm.

Min. 3½ lbs.—Max. 6 lbs. to start the selector trip arm moving.

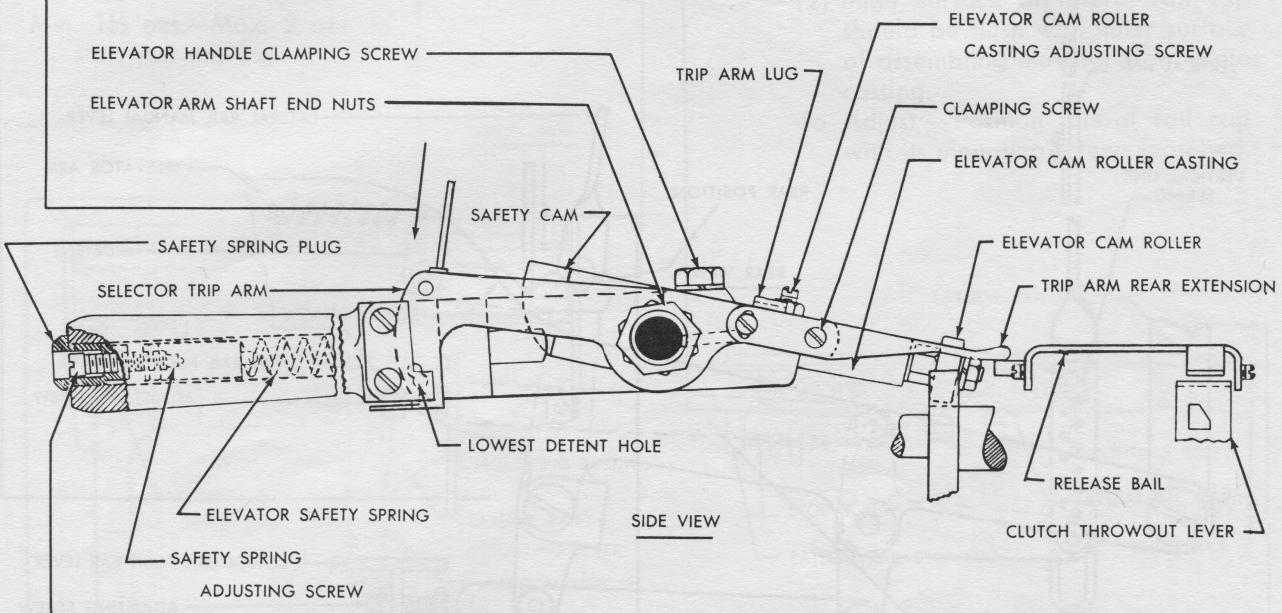

NOTE—Replace driving belt.

(1) Checking the following adjustment will necessitate remaking it. If this adjustment must be remade, the linecasting machine should be properly conditioned to receive blank lines—lines containing neither matrices or space bands.

(2) On early Operating Units (adjusting screw flush with outer surface of safety spring plug), turn adjusting screw to right to decrease spring tension.

ELEVATOR SAFETY SPRING TENSION

Requirement—Position safety spring adjusting screw for minimum tension (to left) so that elevator just fails to release transfer delivery slide. Then slowly increase spring tension one-quarter turn at a time until elevator just releases the transfer delivery slide. Test as outlined below and give adjusting screw one turn additional in direction last rotated.

To Check—Insert tape with series of elevate combinations (No. 2 code) in tape guide. Single elevator signals may be sent by turning manual control lever clockwise to start position and quickly returning it to stop position. Test after each change in adjustment of the screw. After spring is adjusted check tension. With 12 lb. scale hooked on elevator front plate and pulled downward.

Min. 3½ lbs.—Max. 4½ lbs. to prevent elevator from rising when elevator signal is sent. Elevator should start to rise against a 3 lb. pull.

UPPER RAIL PUSH BAR LEVER SCREW

Requirement — Lateral rail manual lever in front detented position. Clearance between upper rail push bar lever adjusting screw and end of upper operating link.
Min. .010"—Max. .020".
To Adjust—Position upper rail push bar lever adjusting screw.

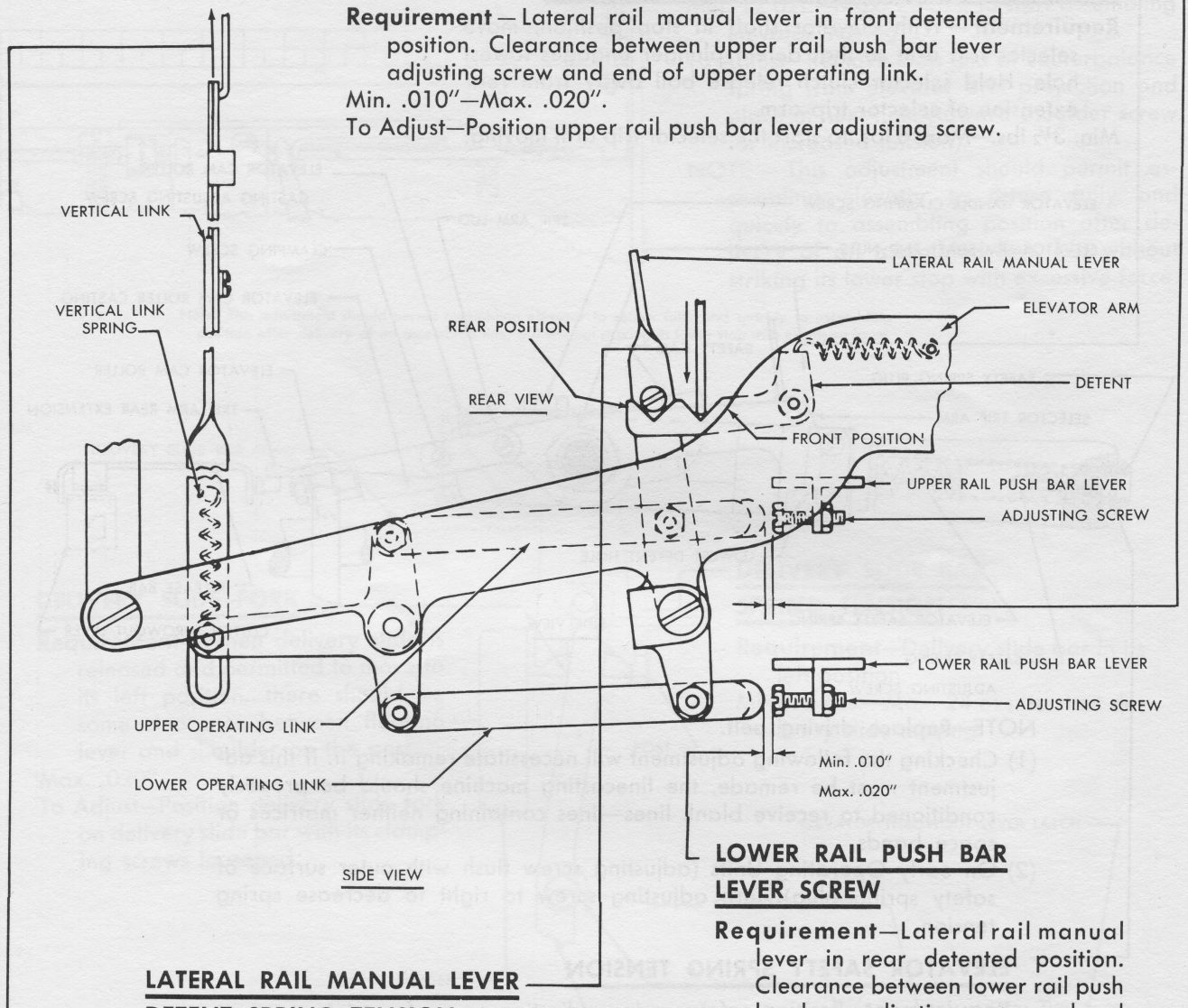

LOWER RAIL PUSH BAR LEVER SCREW

Requirement—Lateral rail manual lever in rear detented position. Clearance between lower rail push bar lever adjusting screw and end of lower operating link.
Min. .010"—Max. .020".
To Adjust—Position lower rail push bar lever adjusting screw.

LATERAL RAIL MANUAL LEVER DETENT SPRING TENSION

Requirement—Lateral rail manual lever in rear detented position.
Min. 1¾ lbs.—Max. 2¼ lbs. to start detent moving.

VERTICAL LINK SPRING TENSION

Requirement—Detach upper end of vertical link from lateral rail actuating lever (Page 41).
Min. 4½ lbs.—Max. 5½ lbs. to start link moving.

D. LATERAL RAIL SPRING TENSION

Requirement—Lateral rail in its unoperated (left) position.

Min. 1½ ozs.—Max. 2 ozs. to start rail moving.

A. LATERAL RAIL CAP

Requirement—(1) Right end of rail cap should clear assembling elevator gate.

Max. .004".

(2) Inner surface of lateral rail cap should be flush with inner surface of assembling elevator front plate casting.

To Adjust—Position lateral rail cap with its mounting screws loosened.

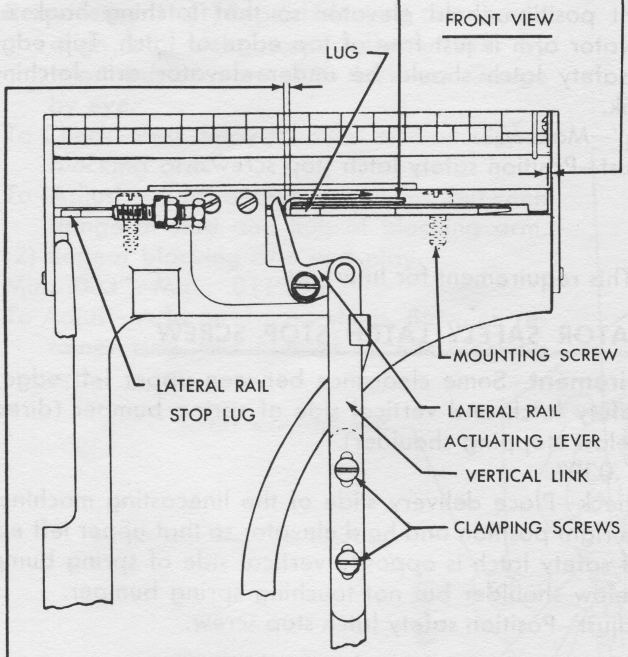

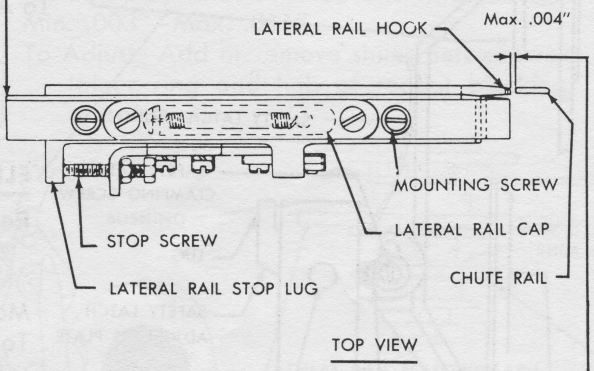

B. LATERAL RAIL STOP SCREW

Requirement—With lateral rail held against its stop screw, some clearance between lateral rail hook and chute rail.

Max. .004".

To Adjust—Position lateral rail stop screw.

C. VERTICAL LINK

Requirement—With lateral rail manual lever (Page 40) detented in front position, clearance between lateral rail actuating lever and lug.

Min. .020"—Max. .040".

To Adjust—Increase or decrease length of vertical link with its clamping screws loosened.

NOTE—Lateral rail stop lug should rest firmly against stop screw, with lateral rail lever detented in rear position.

DELIVERY SLIDE ARM FOLLOWER

Requirement—Elevator shaft in stop position. Move delivery slide (linecasting machine) to its left position and elevator bell crank latching link (Page 15) to its latched (right) position. As the delivery slide is moved slowly to the right, elevator clutch throwout lever (Page 38) should be released when delivery slide is 2¼ inch to 1¾ inch from its right stop.

To Adjust—Position delivery slide arm follower with its clamping screws loosened.

THIS REQUIREMENT
FOR LINOTYPE **COMET**

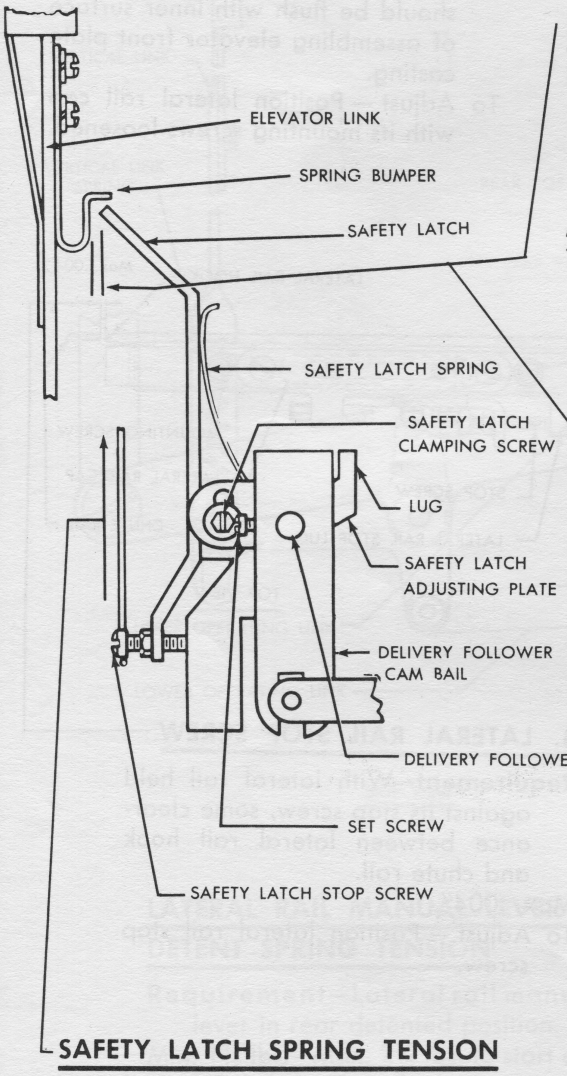

ELEVATOR SAFETY LATCH STOP SCREW

Requirement—With delivery slide (linecasting machine) in its right position, hold elevator so that latching hook on elevator arm is just free of top edge of latch. Top edge of safety latch should be under elevator arm latching hook.

Min. 5/64"—Max. 7/64".

To Adjust—Position safety latch stop screw.

This requirement for Intertype.

ELEVATOR SAFETY LATCH STOP SCREW

Requirement—Some clearance between upper left edge of safety latch and vertical side of spring bumper (directly below stopping shoulder).

Max. .030".

To Check—Place delivery slide of the linecasting machine in its right position and hold elevator so that upper left edge of safety latch is opposite vertical side of spring bumper below shoulder but not touching spring bumper.

To Adjust—Position safety latch stop screw.

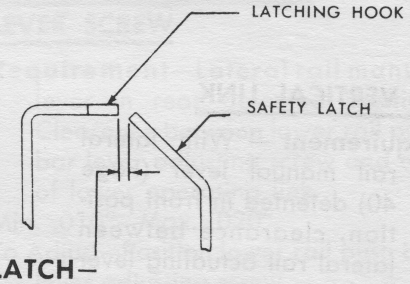

SAFETY LATCH SPRING TENSION

Requirement—With elevator in its assembling position.

Min. 3 ozs.—Max. 5 ozs. to start safety latch moving.

To Adjust—Bow safety latch spring to left and downward with delivery follower cam bail shaft set screw loosened.

SAFETY LATCH—

Requirement—Clearance between upper left edge of safety latch and tip of spring bumper.

Min. .015"—Max. .030".

To Check—Place delivery slide in left position and hold so that tip of spring bumper is opposite safety latch.

To Adjust—Position safety latch with its clamping screws loosened.

NOTE—If either of the following (four) arms are removed for servicing, check alignment and end play requirements.

A. DELAY CAM FOLLOWER ARM SHIM

Requirement—Some clearance between flange of stud and face of bushing. Max. .005".

To Check—Unhook delay selector lever operating arm spring and block bar operating arm spring. (Take up end play to make clearance maximum).

To Adjust—Add or remove shims between block bar operating arm and delay cam follower arm.

B. REPEAT BLOCKING ARM SHIM

Requirement—(1) Repeat blocking arm should align with delay cam follower arm by two-thirds or more of its thickness. Gauge by eye.

To Check—Rest delay follower arm on repeat blocking arm.

To Adjust—Add or remove shims between flange of stud and hub of blocking arm.

(2) Repeat blocking arm end play. Min. .003"—Max. .011".

To Adjust—Add or remove shims. Between retainer ring and hub of repeat blocking arm.

C. REPEAT BLOCKING ARM DETENT SHIM

Requirement—(1) At least two-thirds thickness of repeat blocking arm should engage repeat blocking arm detent roller.

To Adjust—Add or remove shims between flange of stud and hub of repeat blocking arm detent.

(2) End play (between hub and retainer). Min. .003"—Max. .011".

To Adjust—Add or remove shims between retainer ring and hub of repeat blocking arm detent.

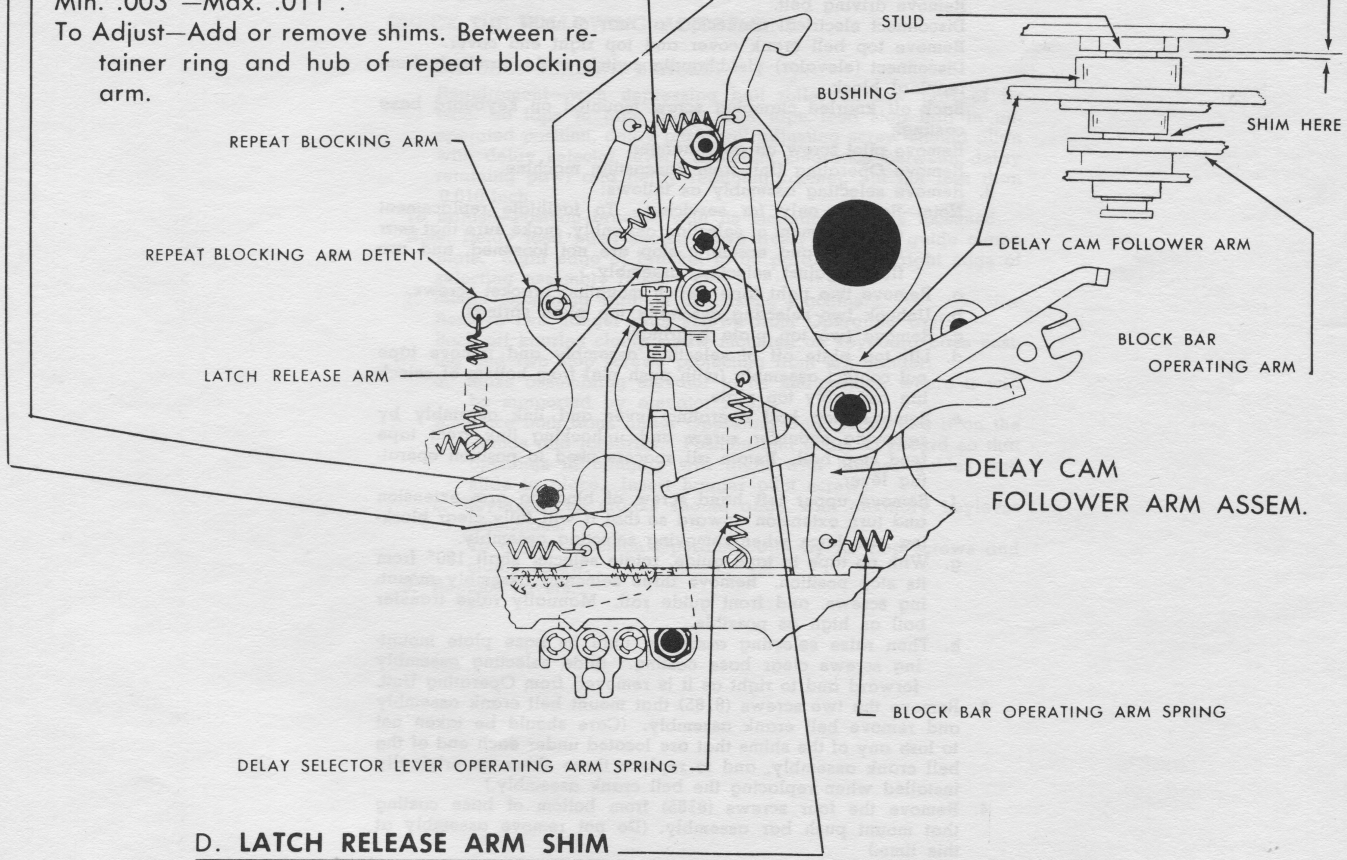

D. LATCH RELEASE ARM SHIM

Requirement—Equal number of shims (±one) at front and back of latch release arm hub. End play (between hub and retainer ring). Min. .003"—Max. 011".

To Adjust—Add or remove shims at front or rear of hub.

GENERAL LUBRICATION SPECIFICATIONS

Unless otherwise specified, one or two drops of oil at each of the places indicated (1 to 74 inclusive) will be sufficient. Use oil for lubrication at all of the places listed below, except where the use of grease is specified.
Oil both loops of all helical springs that exert a nominal tension of less than 2½ pounds. Apply grease to both loops of all helical springs that exert a nominal tension of 2½ pounds or more.
Cams—apply thin film of grease. Gears—apply thin film of grease.

The following lubricants are suggested for use on all Teletypesetter equipment:

KS-7470 Oil, Part No. 88970—1 Qt.; Part No. 88971—1 Gal.
KS-7471 Grease, Part No. 88973—1 Lb.

INSTRUCTIONS FOR CLEANING AND LUBRICATING THE TELETYPESETTER UNIVERSAL OPERATING UNIT

For best operating results, the Operating Unit should be thoroughly cleaned and lubricated approximately every month unless otherwise specified. To clean and lubricate individual assemblies the following procedure is recommended:

1. Remove Operating Unit covers.
   Remove driving belt.
   Disconnect electrical connectors at rear of unit.
   Remove top bell crank cover and top right end cover.
   Disconnect (elevator) yield-handle switch cable terminals from terminal block.
   Back off knurled clamping screw mounted on keyboard base casting.
   Remove pilot screw on each hanger.
   Remove Operating Unit from linecasting machine.
2. Remove selecting assembly as follows:
   Note—Remove only for servicing. To facilitate replacement and alignment of selecting assembly, make sure that rear stop rail and eccentric stop are not loosened, and are flush against selecting assembly.
   a. Remove two tight tape switch mounting bracket screws.
   b. Unhook two selecting assembly top plate springs.
   c. Remove two top plate bearings.
   d. Lift top plate off of selecting assembly and remove tape out contact assembly (with push pin) from bottom of selecting assembly top plate.
   e. Remove stop bail operating lever and link assembly by removing shoulder screw and unhooking link from tape feed stop bail. Retain all spacers used to position operating lever.
   f. Remove upper left hand screw of blocking arm extension and turn extension upward so that it will fully clear blocking arm latch when removing selecting assembly.
   g. With no tape in tape guide, rotate selector shaft 180° from its stop position. Remove three selecting assembly mounting screws, and front guide rail. Manually raise transfer bail as high as possible.
   h. Then raise selecting assembly until its base plate mounting screws clear base casting. Slide selecting assembly forward and to right as it is removed from Operating Unit.
3. Remove the two screws (8185) that mount bell crank assembly and remove bell crank assembly. (Care should be taken not to lose any of the shims that are located under each end of the bell crank assembly, and to replace these shims as originally installed when replacing the bell crank assembly.)
4. Remove the four screws (8185) from bottom of base casting that mount push bar assembly. (Do not remove assembly at this time.)
5. Remove right and left hand hangers.
6. Remove the screw (6745) that mounts coupling sleeve (85463), and slide coupling sleeve out of engagement.
7. Remove push bar assembly by lifting upward.

The individual parts and assemblies should be cleaned and the excessive oil removed. Carbon tetrachloride or other non-inflammable cleaning fluid may be used for cleaning.

(Continued on next page)

GENERAL LUBRICATION SPECIFICATIONS *(Continued)*

After cleaning and lubricating the assemblies of the Universal Operating Unit, the procedure for reassembling is as follows:

1. Replace push bar assembly on base casting so that code bars are located over each associated code bar extension.
2. Engage coupling sleeve (85463) with right hand operating bail cam, and replace screw (6745).
3. Replace the four screws (8185) that mount push bar assembly to base casting.
4. Replace right and left hand hangers.
5. Replace bell crank assembly and shims.
6. Replace selecting assembly as follows:
   With depressing bail roller and push bars on high part of respective cams, move code bars and block bar with their extensions to the left position. Rotate selector shaft approximately 180° from its stop position, and latch tape feed stop bail with delay feed pawl and retaining pawl disengaged from their respective ratchets. Manually hold the transfer bail in its operated position and replace the selecting assembly. Mount the front stop rail, replace stop bail operating lever and link assembly, replace tape out contact assembly on top plate, and remount top plate assembly. Replace tight tape switch bracket.

CHECK THE FOLLOWING ADJUSTMENT:

RATCHET BEARING BRACKET

Requirement—with depressing bail roller on low part of its cam, no tape in tape guide, and tape feed stop bail in unoperated position, delay push bail adjusting screw should align with delay selector lever. Minimum clearance between delay retaining pawl and delay retaining ratchet, but not less than 0.010 inch.

To adjust—Position bracket with its mounting screws loosened.

Note: Delay feed pawl should move freely in delay guide clamp plate. Right edge of bracket to be parallel with right edge of selecting assembly base.

7. Mount Operating Unit on linecasting machine.
   Remove two hanger pilot screws from Operating Unit.
   Back off knurled clamp screw mounted on keyboard base casting and two stop screws projecting from left hanger.
   a. Raise assembling elevator to its mid-position where it will be supported by elevator latch.
   b. Place both arms under Operating Unit, supporting it on the hands and forearms. Position unit under keyboard so that openings in hangers will align with hanger guides and slide in place. Insert hanger pilot screws.
   c. Keylever bell cranks should align with auxiliary keylever extensions.
      To adjust—position Operating Unit by its stop screws and clamp screw.
8. Replace covers.

FAIRCHILD
GRAPHIC EQUIPMENT

BASE ASSEMBLY

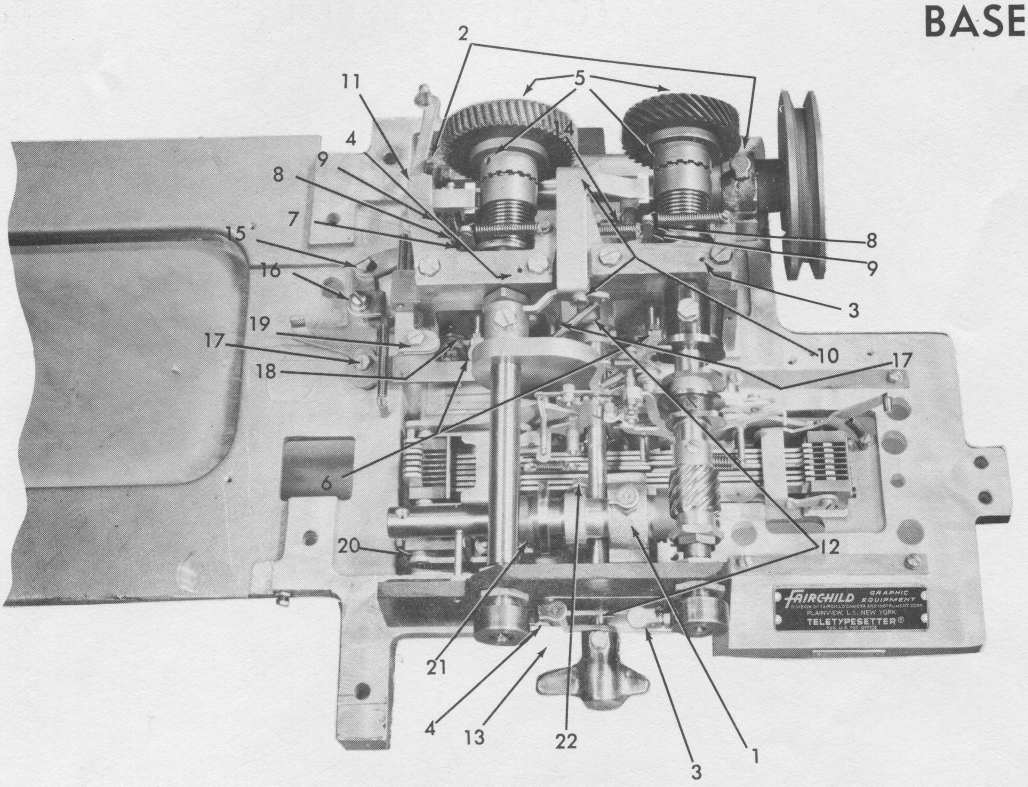

(Timing Cam Contacts and Tape S

1. Spreader Cam Drive Shaft Right B
2. Pulley Shaft Bearing—Fill Two Oi
3. Selector Shaft Bearing—Fill Oil
4. Elevator Shaft Bearing—Fill Oil
5. Elevator and Selector Shaft Cluto
6. Clutch Throwout Lever Shaft—F
7. Elevator Clutch Reset Lever Rol
8. Clutch Detent Lever Bearing
9. Clutch Detent Lever Cam Roller
10. Selector Clutch Release Bail Be
11. Elevator Clutch Throwout Lever
12. Manual Control Shaft Bearing (
13. Manual Control Detent Plunger
14. Manual Reset Cam Roller
15. Selector Clutch Reset Link Beari
16. Elevator Bell Crank Pivot Screv
17. Elevator Bell Crank Latching Lin
18. Elevator Bell Crank Latch Pivot
19. Floating Lever Pivot Screw
20. Depressing Bail Bearing
21. Depressing Bail Roller Bearing
22. Depressing Arm Bearing and G

23. Operating Bail Roller Arm Piv
24. Spreader Cam Bearings—Fill C
25. Spreader Cam—Saturate Felt
26. Code Bars—At Guide Blocks
27. Push Bars—Oil Sparingly At
28. Shift Bell Crank Pivot Screws
29. Shift Link Pivot Screws—Each
30. Shift Latch Pivot Screw
31. Yield and Shift Lever Pivot S

PUSH BAR ASSEMBLY

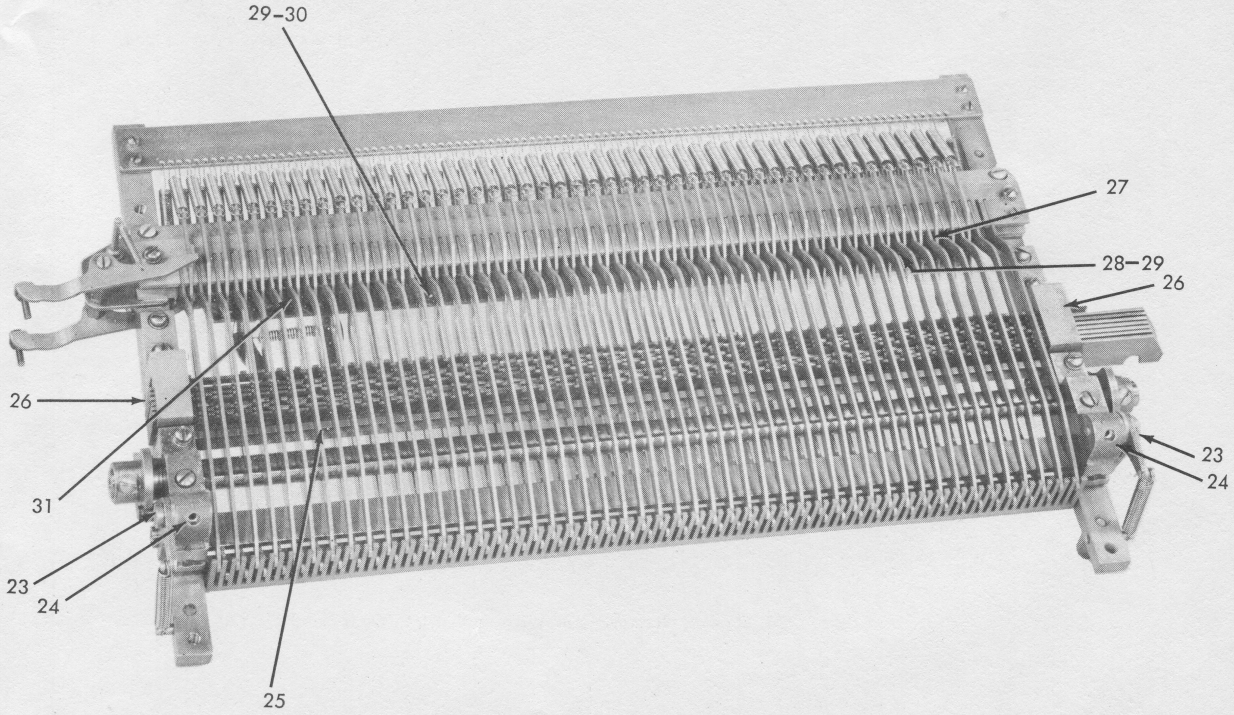

SE ASSEMBLY

(Timing Cam Contacts and Tape Stop Assembly Removed)

1. Spreader Cam Drive Shaft Right Bearing—Fill Oil Cup
2. Pulley Shaft Bearing—Fill Two Oil Cups
3. Selector Shaft Bearing—Fill Oil Cup and Oil Hole
4. Elevator Shaft Bearing—Fill Oil Cup and Oil Hole
5. Elevator and Selector Shaft Clutches—Remove Oil Retaining Nuts and Fill Shaft
6. Clutch Throwout Lever Shaft—Fill Oil Cup
7. Elevator Clutch Reset Lever Roller Bearing
8. Clutch Detent Lever Bearing
9. Clutch Detent Lever Cam Roller Bearing
10. Selector Clutch Release Bail Bearing—Two Places
11. Elevator Clutch Throwout Lever Latch Bearing—Two Places
12. Manual Control Shaft Bearing (Reset Cam)—Two Places
13. Manual Control Detent Plunger
14. Manual Reset Cam Roller
15. Selector Clutch Reset Link Bearing—Two Places (see Contact Assem.)
16. Elevator Bell Crank Pivot Screw
17. Elevator Bell Crank Latching Link Pivot Screw and Guide—Two Places
18. Elevator Bell Crank Latch Pivot Screw
19. Floating Lever Pivot Screw
20. Depressing Bail Bearing
21. Depressing Bail Roller Bearing
22. Depressing Arm Bearing and Guide Slot (see Contact Assem.)

SELECTING ASSEMBLY

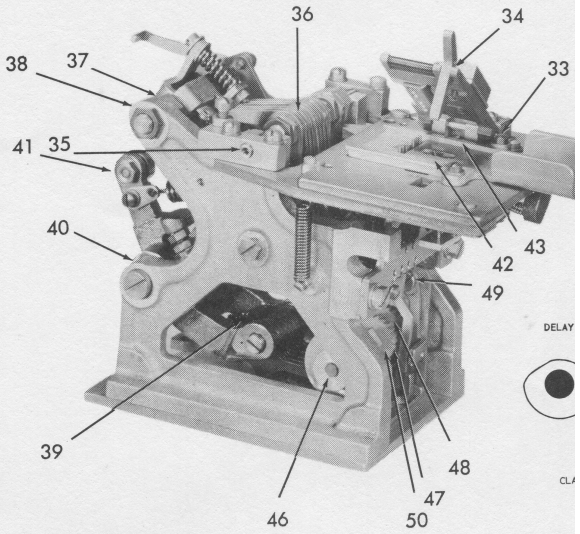

33. Tape Retaining Lid Bearing—Two Places
34. Tape Retaining Lid Latch
35. Top Plate Bearing—Two Places
36. Selector Lever Bearing Shaft—Seven Place
37. Selector Lever Bail—Two Places
38. Selector Lever Bail Cam Roller Bearing
39. Transfer Levers Bearing Shaft—Seven Pl
40. Transfer Bail Bearings—Three Oil Holes
41. Transfer Bail Cam Roller Bearing
42. Tape Feed Wheel Bearing—Two Places
43. Tape Feed Pawl Bearing
44. Tape Feed Lever Bearings
45. Tape Feed Lever Extension Roller
46. Delay Feed Ratchet Shaft Bearing
47. Delay Feed Ratchet—Oil Teeth Sparingl
48. Delay Retaining Ratchet—Oil Teeth Sp
49. Delay Retaining Pawl Bearing
50. Delay Push Bail Bearings—Two Places
51. Delay Feed Pawl Bearing
52. Delay Feed Lever Bearings

23. Operating Bail Roller Arm Pivot Screws—Two Places
24. Spreader Cam Bearings—Fill Oil Hole, Two Places
25. Spreader Cam—Saturate Felt With Oil
26. Code Bars—At Guide Blocks
27. Push Bars—Oil Sparingly At Fulcrum Rod
28. Shift Bell Crank Pivot Screws
29. Shift Link Pivot Screws—Each End
30. Shift Latch Pivot Screw
31. Yield and Shift Lever Pivot Screw

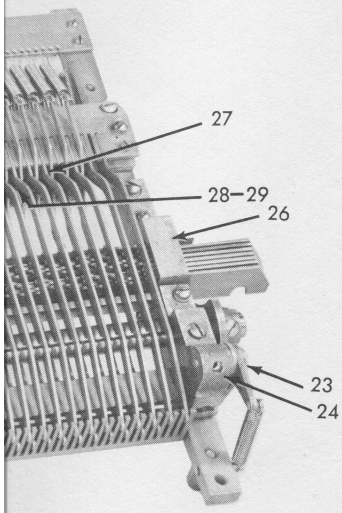

BELL CRANK ASSEMBLY

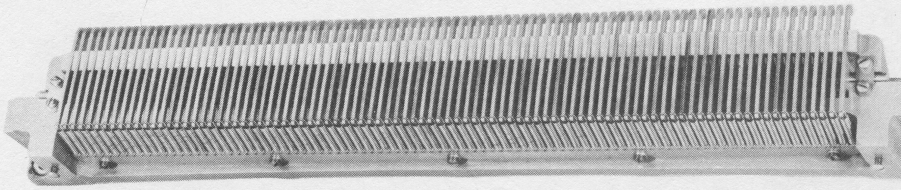

32. Key Lever Bell Cranks—Remove and Wipe with Cloth Dampened Slightly with Oil

LUBRIC

SELECTING ASSEMBLY

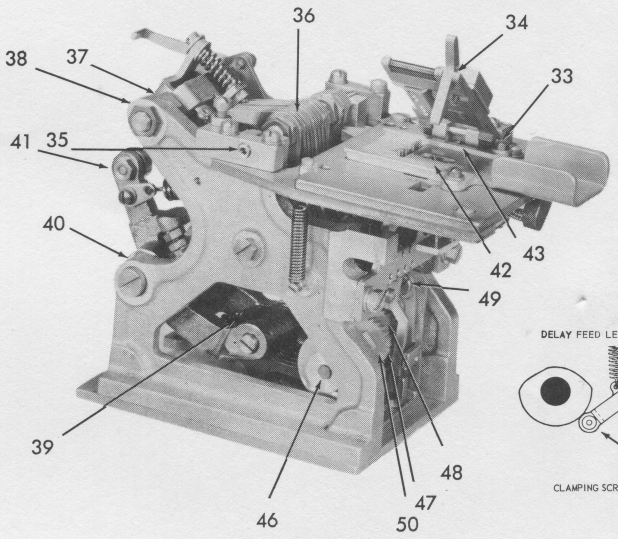

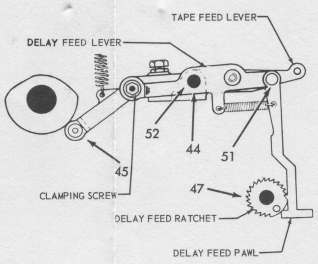

33. Tape Retaining Lid Bearing—Two Places
34. Tape Retaining Lid Latch
35. Top Plate Bearing—Two Places
36. Selector Lever Bearing Shaft—Seven Places
37. Selector Lever Bail—Two Places
38. Selector Lever Bail Cam Roller Bearing
39. Transfer Levers Bearing Shaft—Seven Places
40. Transfer Bail Bearings—Three Oil Holes
41. Transfer Bail Cam Roller Bearing
42. Tape Feed Wheel Bearing—Two Places
43. Tape Feed Pawl Bearing
44. Tape Feed Lever Bearings
45. Tape Feed Lever Extension Roller
46. Delay Feed Ratchet Shaft Bearing
47. Delay Feed Ratchet—Oil Teeth Sparingly
48. Delay Retaining Ratchet—Oil Teeth Sparingly
49. Delay Retaining Pawl Bearing
50. Delay Push Bail Bearings—Two Places
51. Delay Feed Pawl Bearing
52. Delay Feed Lever Bearings

BELL CRANK ASSEMBLY

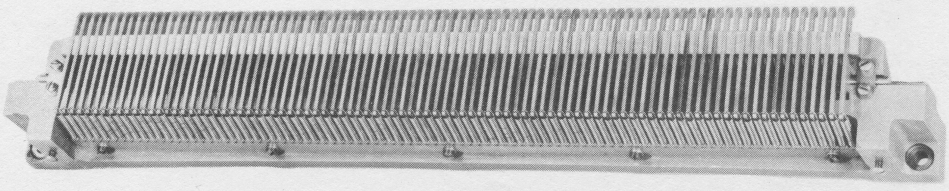

32. Key Lever Bell Cranks—Remove and Wipe with Cloth Dampened Slightly with Oil

LUBRICATION CHART

SSEMBLY

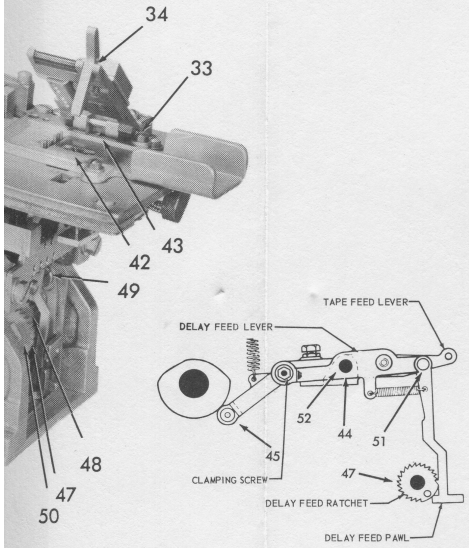

l Bearing—Two Places
l Latch
—Two Places
ing Shaft—Seven Places
l—Two Places
Cam Roller Bearing
aring Shaft—Seven Places
ings—Three Oil Holes
Roller Bearing
Bearing—Two Places
earing
Bearings
Extension Roller
et Shaft Bearing
t—Oil Teeth Sparingly
atchet—Oil Teeth Sparingly
wl Bearing
Bearings—Two Places
Bearing
Bearings

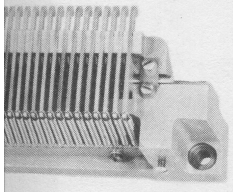

ned Slightly with Oil

CONTACT ASSEMBLY

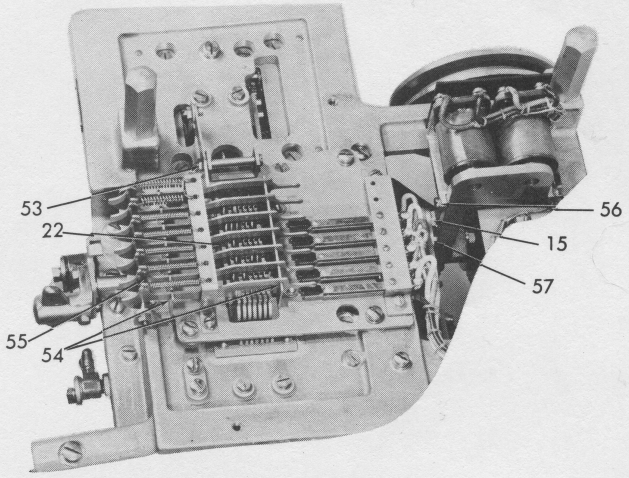

53. Tape Feed Stop Bail Operating Lever—Shoulder Screw Two Places
54. Code Levers—Both Sides of Each Lever at Guide Slot
55. Code Lever Bearing—Seven Places
56. Clutch Magnet Armature Pivot Screws—Two Places
57. Clutch Magnet Armature Connecting Link—Two Places

REPEAT CHARACTER DELAY MECHANISM

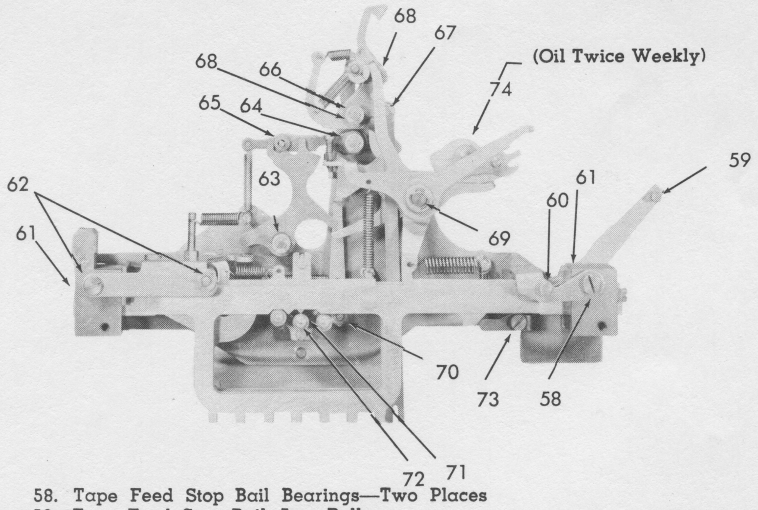

58. Tape Feed Stop Bail Bearings—Two Places
59. Tape Feed Stop Bail Arm Roller
60. Tape Feed Stop Bail Link (Both Ends)
61. Code Bar Extension—At Guide Blocks
62. Code Bar Extension Detent—Two Pivot Screw and Detent Rollers
63. Repeat Blocking Arm Bearing
64. Repeat Blocking Arm Detent Bearing
65. Repeat Blocking Arm Detent Roller Bearing
66. Blocking Arm Latch Release Arm
67. Latch Blocking Lever—At Riveted Joint
68. Tape Feed Blocking Arm Latch—At Guide Post and Hub
69. Delay Cam Follower Arm Assembly Hub—Front and Rear
70. Function Blocking Arm Bearing
71. Function Blocking Arm Code Sensing Roller Shaft—Rear End of Shaft
72. Function Blocking Arm Code Sensing Rollers and Slide
73. Tape Feed Stop Bail Latch
74. Delay Cam Follower Roller Lubricating Felt—**Twice Weekly**

REGNIER

TELETYPESETTER®

BULLETIN 10B

ADJUSTMENTS and LUBRICATION for the UNIVERSAL OPERATING UNIT

Part Bulletin 548

FAIRCHILD
GRAPHIC EQUIPMENT
A DIVISION OF FAIRCHILD CAMERA AND INSTRUMENT CORPORATION

221 FAIRCHILD AVENUE, PLAINVIEW, L.I., N.Y.

upper push Bar have a large spreader cam pad
LOWER " " " " small " " "

all fun. ~~the~~ push Bar have lug to open levers

TELETYPESETTER®

BULLETIN 10B

ADJUSTMENTS and LUBRICATION for the UNIVERSAL OPERATING UNIT

FAIRCHILD
GRAPHIC EQUIPMENT
A DIVISION OF FAIRCHILD CAMERA AND INSTRUMENT CORPORATION
221 FAIRCHILD AVENUE, PLAINVIEW, L.I., N.Y.

Copyright 1958 by Fairchild Camera and Instrument Corp. Copyright in all countries participating in International Convention and Pan American Conventions. All rights reserved including rights of translations into all languages.

Printed in U.S.A.

NOTE—To facilitate adjustment of requirements on Pages 1 to 9, remove elevator shaft.

Procedure—1. Remove timing cam contact bracket (Page 32).
2. Remove elevator cam mounting screw.
3. Trip elevator throwout lever latch (Page 16) and rotate shaft so that clutch stop lug (Page 16) is up.
4. Unhook detent spring (Page 11).
5. Remove screw, elevator thrust washer, and shims (Page 9).
6. Slide shaft out at rear.

Omit elevator shaft requirements until other adjustments (preceding top of Page 14) are completed.

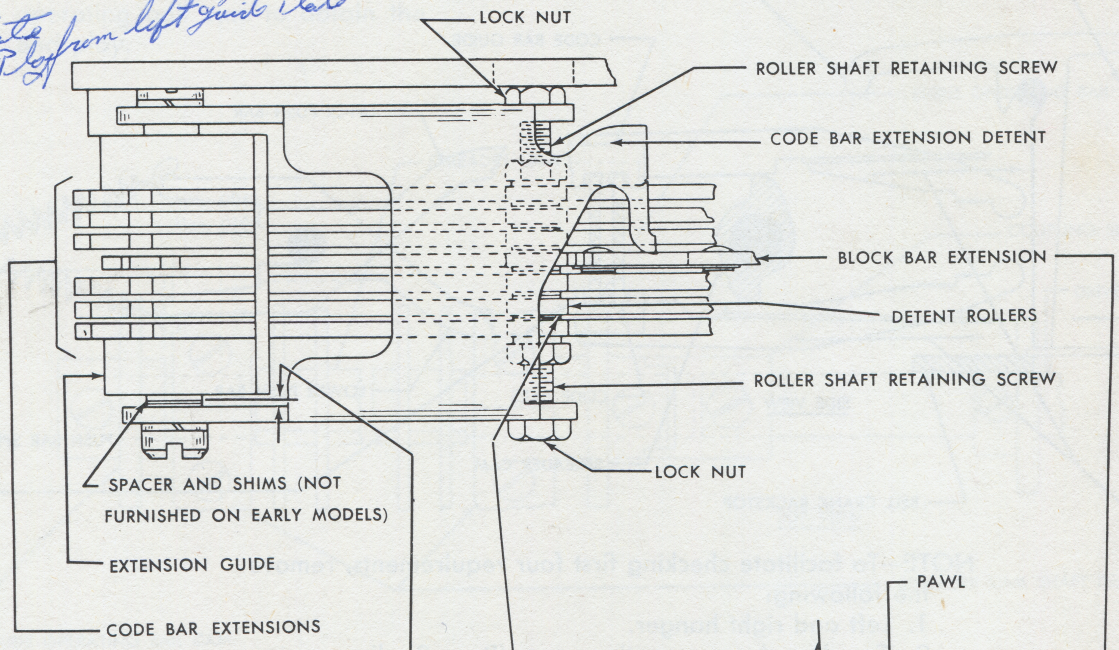

CODE BAR EXTENSION DETENT END PLAY

Requirement—Some end play
Max. .008"
To Adjust—Add or remove shims between spacer and front arm of detent.

CODE BAR EXTENSION DETENT ROLLER

Requirement—(1) some end play between any two adjacent detent rollers.
Max. .005"
(2) Detent rollers centrally located with respective code bar extension when detent side play is taken up in first one direction and then the other.
To Adjust—Position the two roller shaft retaining screws with lock nuts loosened.

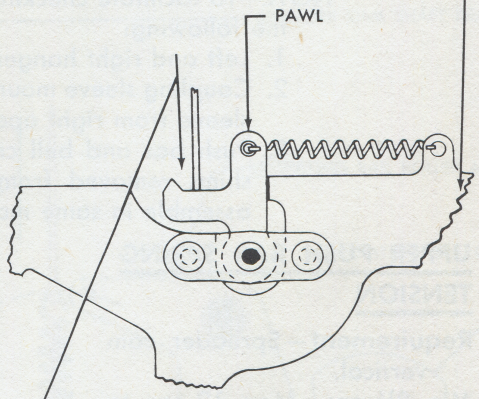

BLOCK BAR EXTENSION PAWL SPRING TENSION

Requirement—With transfer bail roller just ready to start on rise of its cam (Page 17), move block bar extension to right and lift detent clear of the extensions.
Min. 16 ozs.—Max. 21 ozs. to start pawl moving.

(if you can't accomplish by look you can move backs plate)

CODE BAR EXTENSION DETENT (LEFT GUIDE BLOCK)

(Critical - will loose delay if not right)

Requirement—Move repeat blocking arm to left past its detent. With all code bar and block bar extensions in marking (left) position and then shifted to spacing (right) position, clearance between repeat blocking arm and adjusting screw should be equal within .005 inch.

To Adjust—Position code bar extension left guide with its repeat character delay mechanism mounting screws tight. Shift entire assembly by loosening 4-bottom guide block mounting screws.

REPEAT BLOCKING ARM DETENT SPRING TENSION

Requirement—Selector shaft in stop position.

Min. ¾ oz.—Max. 1¼ ozs. to start detent moving.

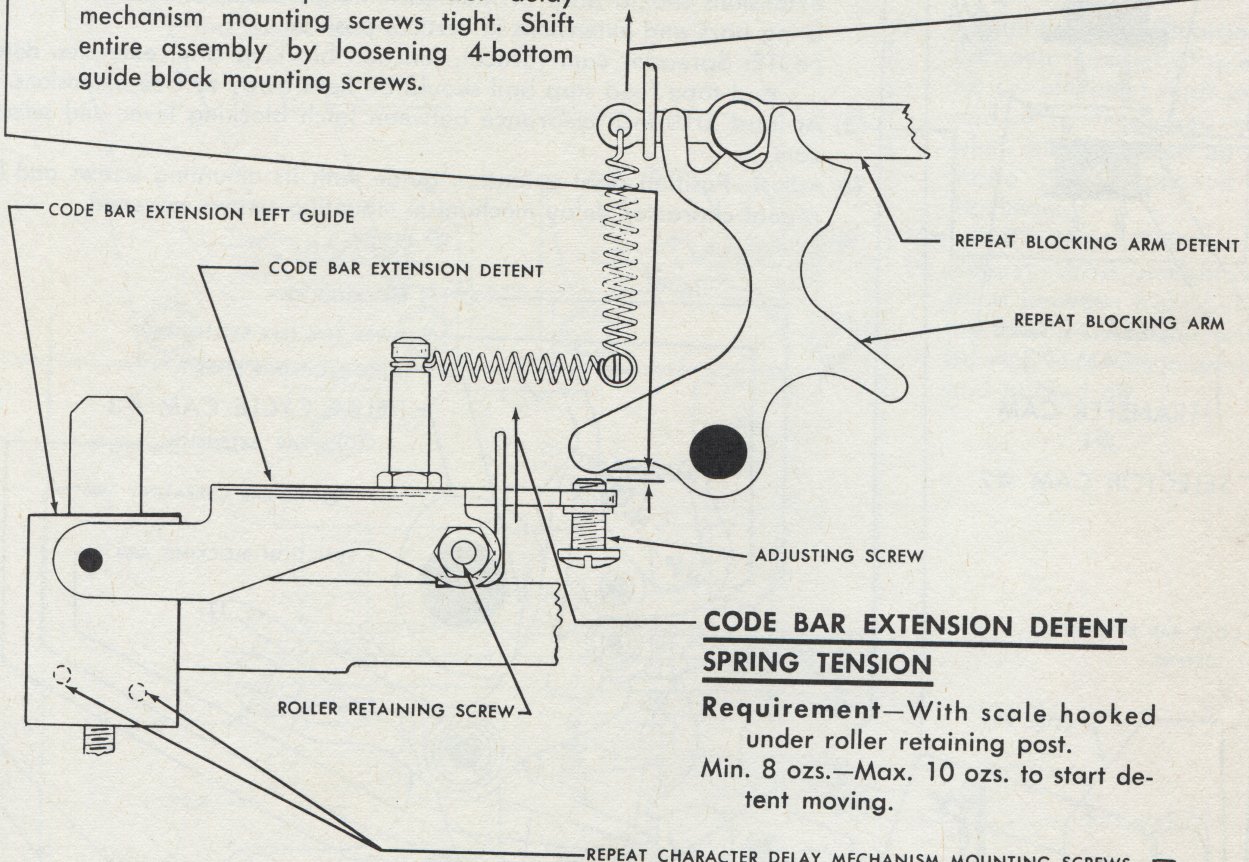

CODE BAR EXTENSION DETENT SPRING TENSION

Requirement—With scale hooked under roller retaining post.

Min. 8 ozs.—Max. 10 ozs. to start detent moving.

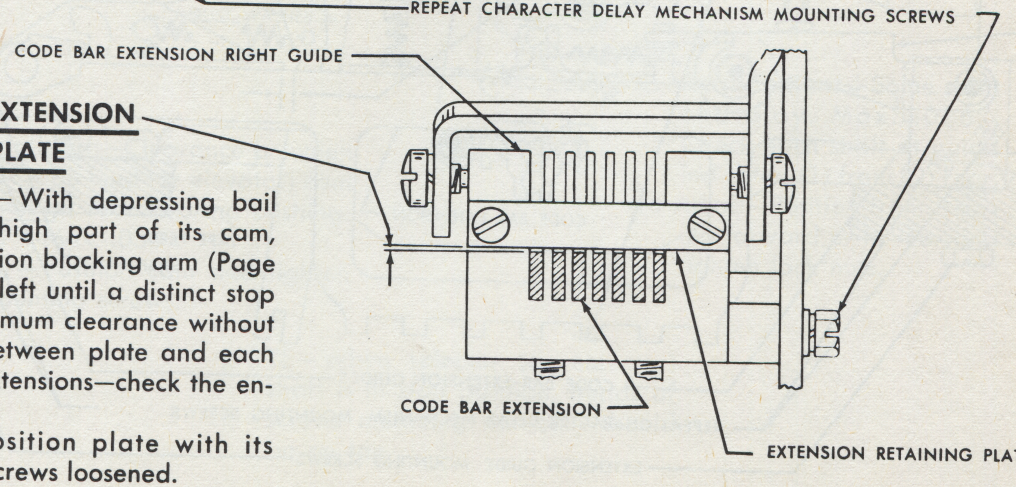

CODE BAR EXTENSION RETAINING PLATE

Requirement—With depressing bail roller on high part of its cam, move function blocking arm (Page 12) to the left until a distinct stop is felt. Minimum clearance without binding between plate and each of seven extensions—check the entire travel.

To Adjust—Position plate with its mounting screws loosened.

NOTE—Replace elevator shaft:
Insert shaft through rear bearing with clutch stop lug at top and throw-out lever, reset. Replace components removed (reverse order of Page 1).

SELECTOR AND ELEVATOR SHAFT END PLAY

A. **Requirement**—Selector and elevator shafts should turn freely.
To Adjust—Align front and rear bearing brackets with their mounting screws loosened.

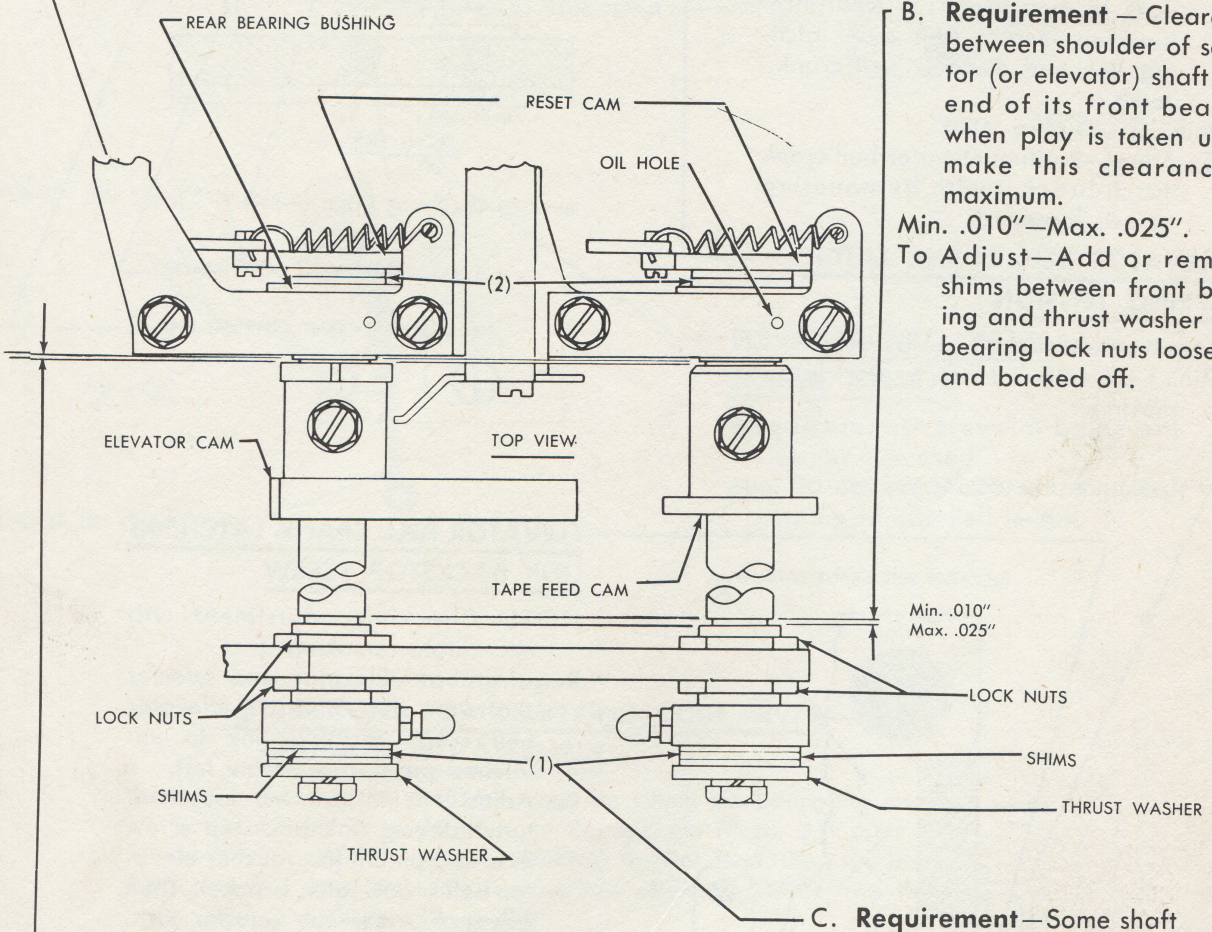

B. **Requirement** — Clearance between shoulder of selector (or elevator) shaft and end of its front bearing when play is taken up to make this clearance a maximum.
Min. .010"—Max. .025".
To Adjust—Add or remove shims between front bearing and thrust washer with bearing lock nuts loosened and backed off.

C. **Requirement**—Some shaft end play. Max. .006". Check each shaft at points indicated (1) front (2) rear. do not use #2
To Adjust—Position front bearing forward or to rear and tighten lock nuts.

D. **Requirement**—Clearance between hub of tape feed (or elevator) cam and end of rear bearing bushing.
Min. .010"—Max. .030".
To Adjust—Position cam and tighten its mounting screws.

NOTE—When selector (or elevator) shaft is in stop position, heads of screws mounting the cam should be on top.

CLUTCH SPRING TENSION

Requirement—(Page 16)

SELECTOR AND ELEVATOR SHAFT CLUTCH

Requirement—Clearance between teeth of driving and driven member of both clutches.

Min. .020"—Max. .030".

To Check—Selector (or elevator) shaft fully disengaged and gear play taken up in direction for minimum clearance.

To Adjust—Add or remove shims between the driving clutch member and its respective bushing. Align oil holes in bushing with those of driving member.

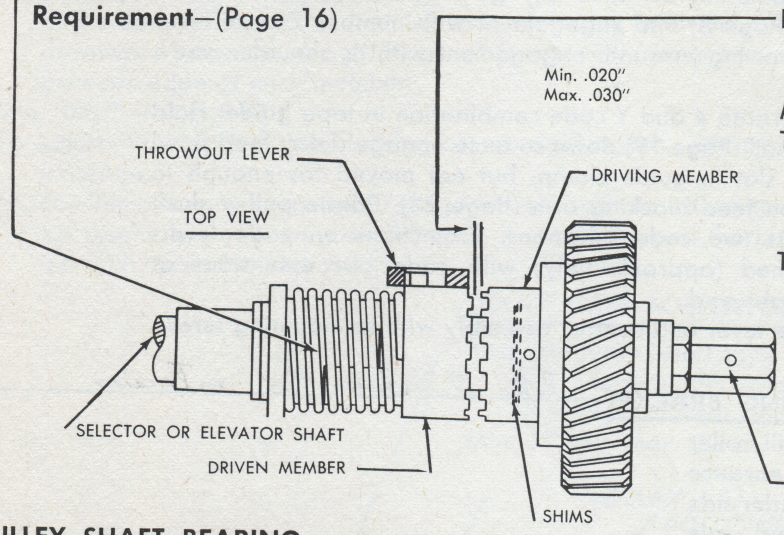

Selector shaft has beveled teeth
elevator shaft has square teeth

PULLEY SHAFT BEARING

Requirement—Minimum play, without binding, between elevator shaft driven gear or selector shaft driven gear and its respective driving pinion (or gear) on pulley shaft. Check both driven gears for a complete revolution.

To Adjust—Add or remove shims between pulley shaft bearings and castings.

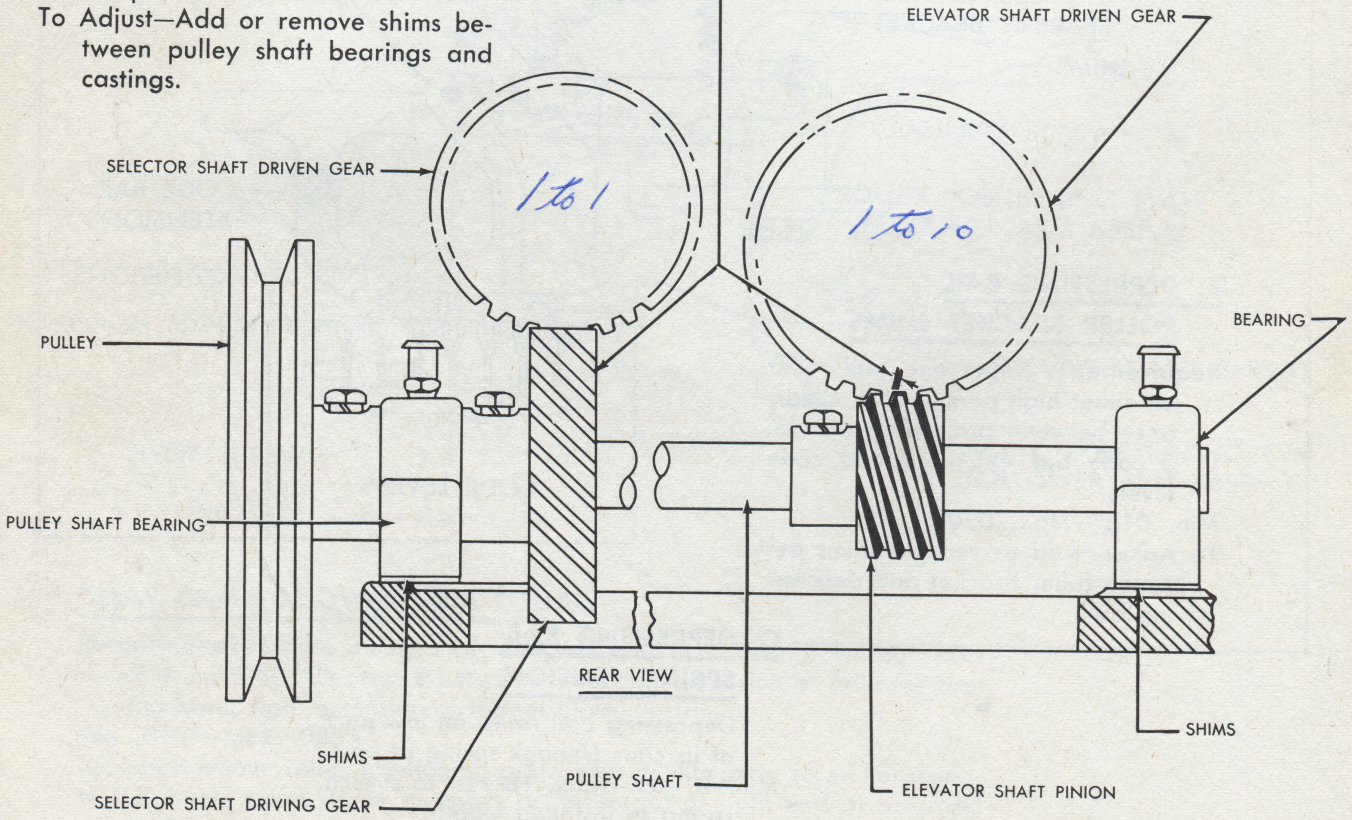

SELECTOR CLUTCH RESET LINK ECCENTRIC

NOTE—Checking adjustment will necessitate remaking it. Remove pulley for better access to eccentric.

Requirement—Manual control lever handle in off position (reset cam vertical). Selector and elevator shaft in stop position. Elevator bell crank latching link in latched position.

To Adjust—Position clutch reset link eccentric bushing so that the reset cam roller just touches the clutch reset lever.

adjust so weight of eccentric is slightly to right and viewed from the rear.

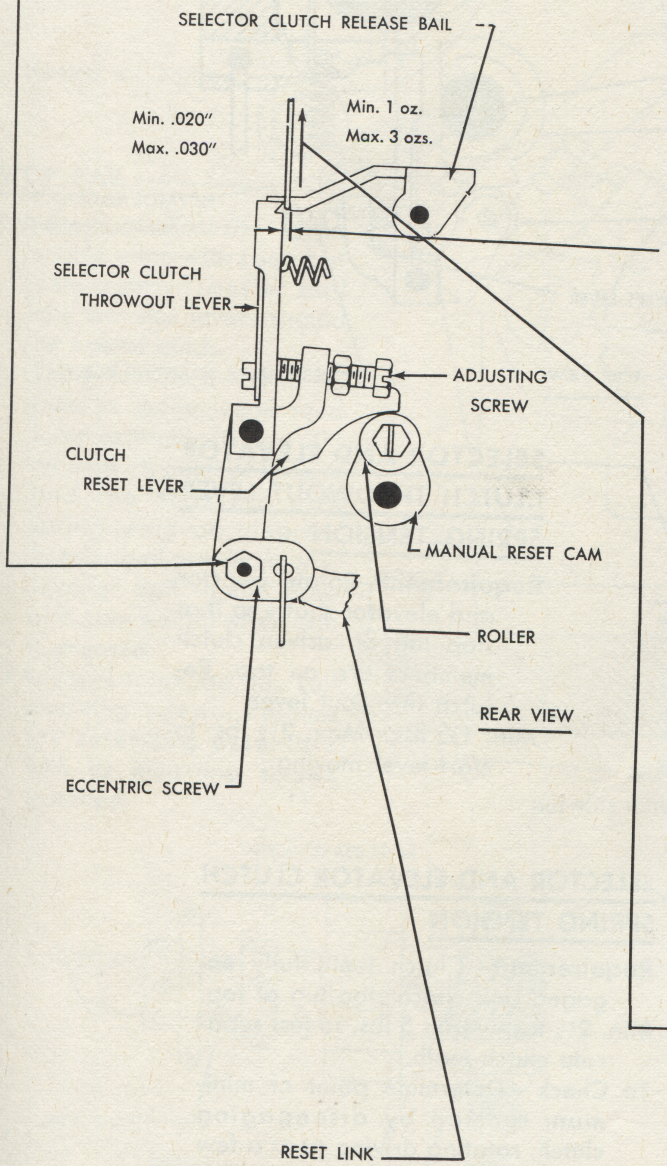

B. SELECTOR CLUTCH THROWOUT LEVER ADJUSTING SCREW

Requirement—Elevator bell crank latching link in latched position, overtravel of throwout lever and outer shoulder of selector clutch release bail.

Min. .020"—Max. .030".

To Adjust—Position adjusting screw.

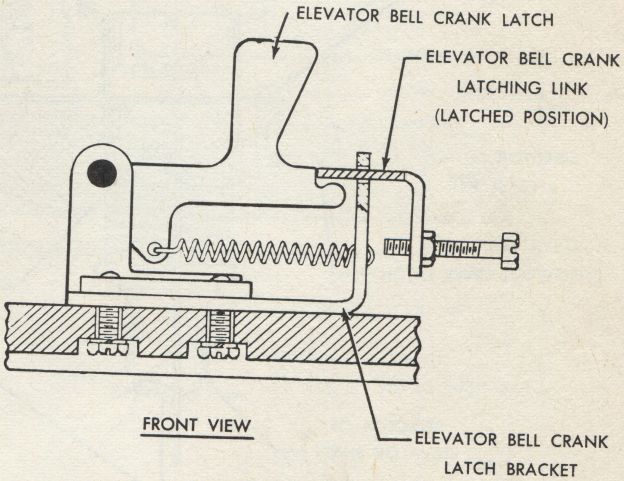

C. SELECTOR CLUTCH RELEASE BAIL SPRING TENSION

Requirement—Manual control handle in "off" position. (Manual reset cam vertical).

Min. 1 oz.—Max. 3 ozs. to start latch moving.

NOTE—In replacing top plate, guide feed pawl into position, rehook two top plate springs and replace bearings.

INSTRUCTIONS FOR REPLACING TAPE FEED STOP BAIL OPERATING LEVER AND LINK

Hook link to stop bail lug.
Mount operating lever to its bracket with shoulder screw, spacers and nut (Page 38).

TOP PLATE SPRING TENSION

Requirement—Hook a 32 oz. scale under end of tape guide.
Min. 8 ozs.—Max. 20 ozs. to start top plate moving.

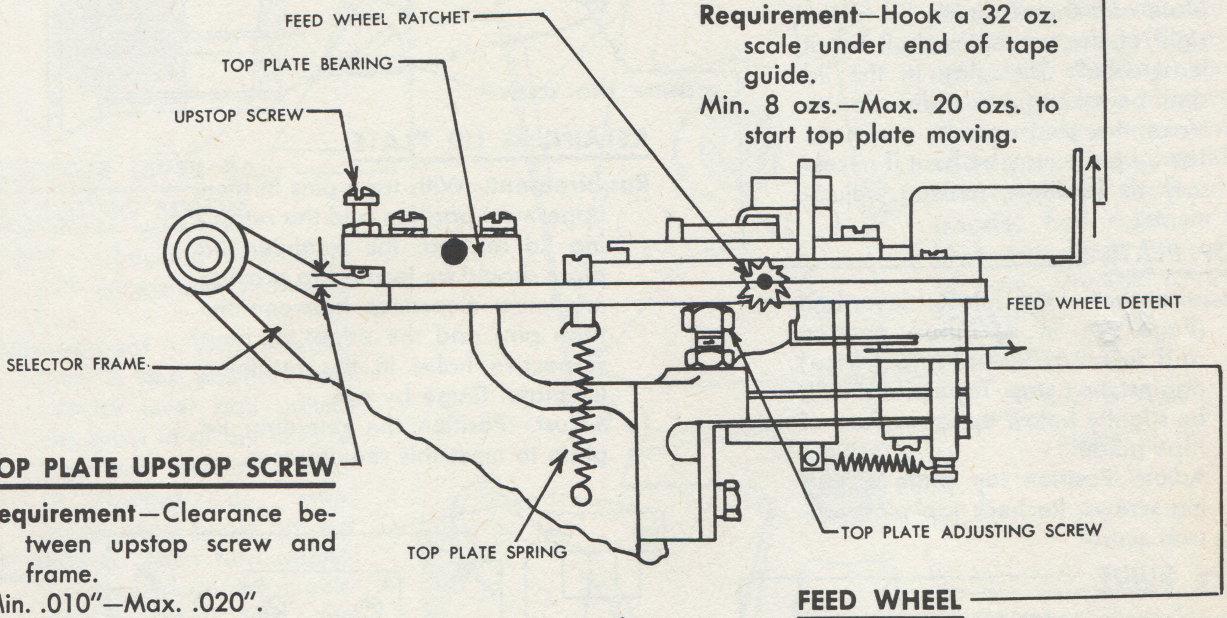

TOP PLATE UPSTOP SCREW

Requirement—Clearance between upstop screw and frame.
Min. .010"—Max. .020".
To Adjust—Position upstop screw.

FEED WHEEL DETENT SPRING TENSION

Requirement—With detent roller between any two ratchet teeth.
Min. 12 ozs.—Max. 15 ozs. to start detent moving.

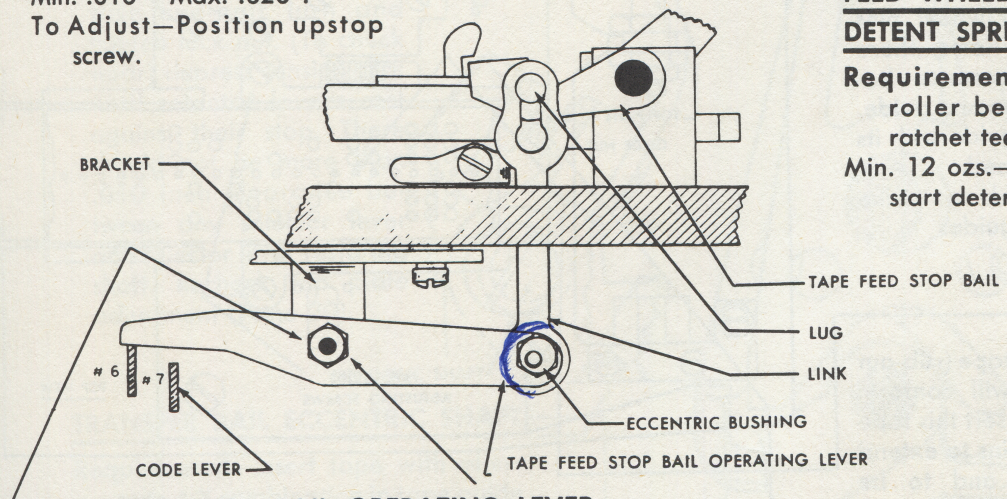

TAPE FEED STOP BAIL OPERATING LEVER

Requirement—With tape feed lever extension (Page 27) on high part of its cam and tape feed stop bail latched, operating lever should move without binding over its entire travel.

To Adjust—

1. Lateral position—add or remove spacers between operating lever and shoulder screw (Page 31).
2. Angular position—shift operating lever bracket with its mounting screws loosened.

TAPE SPACE ADJUSTMENT

Requirement—Remove or add shims between the tape retaining lid and the retaining lid plate so that the space between the tape guide plate and the tape retaining lid plate is from .006" to .008" when measured at the left edge of the retaining lid plate as viewed when facing operating unit. The clearance between the tape guide plate and the retaining lid to the right of the tape pins shall be at least .006". The play in the lid shall be taken up in a direction to make the clearance a minimum. The lid plate may be bent if necessary to facilitate making adjustments.

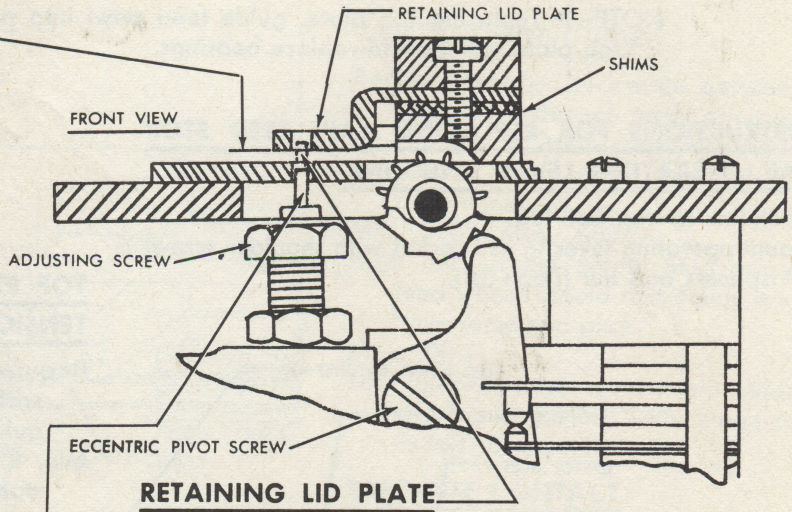

TOP PLATE

Requirement—With selector lever bail (Page 27) in ~~operated~~ position and selector levers (clockwise) against their stop. Tape pins should be slightly below upper surface of tape guide.

To Adjust—Position top plate adjusting screws. Recheck top plate upstop screw.

RETAINING LID PLATE

Requirement—With tape pins in their uppermost position and the retaining lid latched, the retaining lid plate should be located to provide maximum clearance between the tape pins and the edges of their respective holes in the retaining lid plate. Gage by eye.

To Adjust—Position the retaining lid plate to meet this requirement.

TAPE GUIDE

Requirement—With feed wheel pins engaging tape feed holes, there should be equal clearance between each side of tape and guide.

To Adjust—Position tape guide with its mounting screw loosened.

NOTE—Tape pins should not strike sides of slot in tape guide.

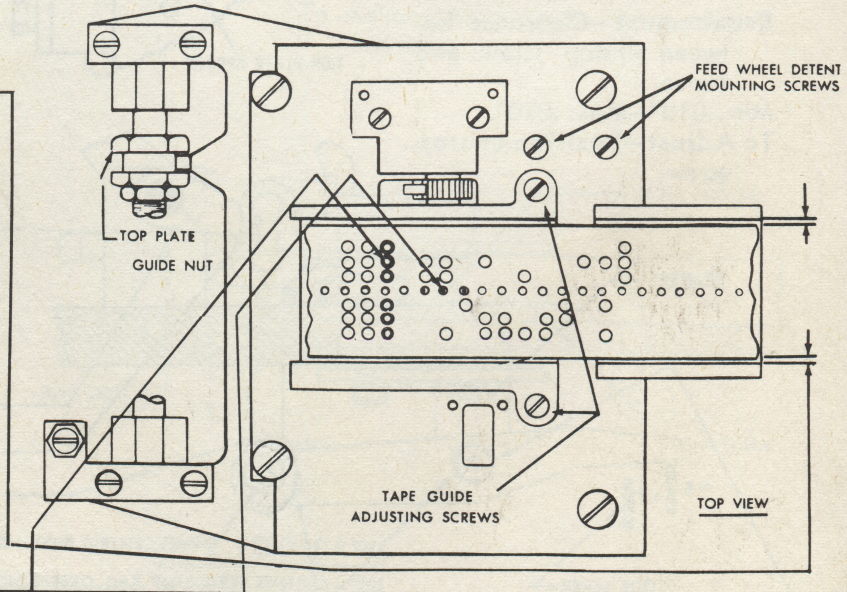

FEED WHEEL DETENT

Requirement—Perforate tape (rub-out combination) which will conform to gauge No. 2215. Insert this tape in tape guide. Tape pins to extend through tape holes and to be centrally located (laterally).

To Adjust—Position feed wheel detent bracket with its mounting screws loosened. (Old Style).

To Adjust—Position feed wheel detent bracket with its mounting screws located to the right in elongated holes. Obtain full seating of detent roller by rotating eccentric pivot screw. (New Style).

TOP PLATE GUIDE NUT

Requirement—Tape pins centrally located (front to rear) with holes in tape.

To Adjust—Position top plate guide nut.

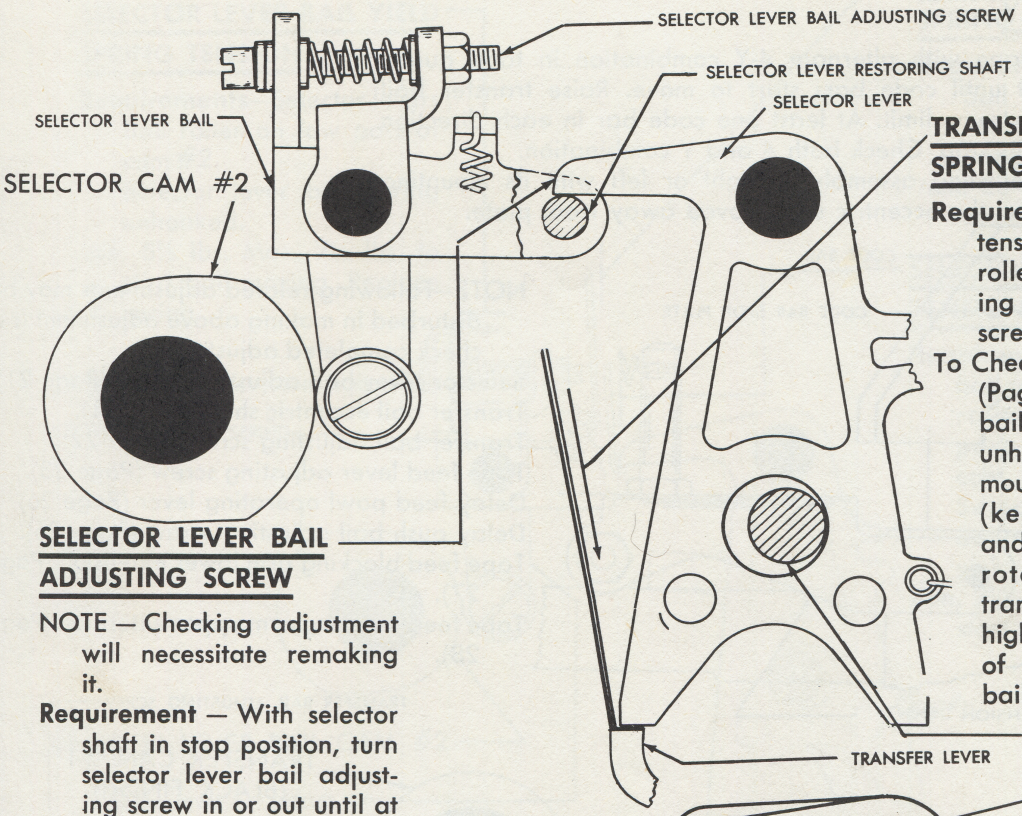

SELECTOR LEVER BAIL ADJUSTING SCREW

NOTE — Checking adjustment will necessitate remaking it.

Requirement — With selector shaft in stop position, turn selector lever bail adjusting screw in or out until at least one selector lever is against its stop. Screw head bears against washer. Then turn adjusting screw counter-clockwise one-half turn and tighten lock nut. (To check wear) depress sensing pins until selector levers rest against their stop. There should not be more than .010 inch clearance between any selector lever and selector lever restoring shaft. Recheck top plate adjustment (Page 20).

TRANSFER BAIL YIELD SPRING TENSION

Requirement—At least 5½ lb. tension to start transfer bail roller arm (Page 22) moving away from adjusting screw.

To Check—With spreader cam (Page 2) vertical, operating bail lever springs (Page 3) unhooked, coupling sleeve mounting screw removed (keep sleeve engaged), and no tape in tape guide, rotate pulley shaft until transfer bail roller is on high part (note Page 22) of cam. Unhook transfer bail spring.

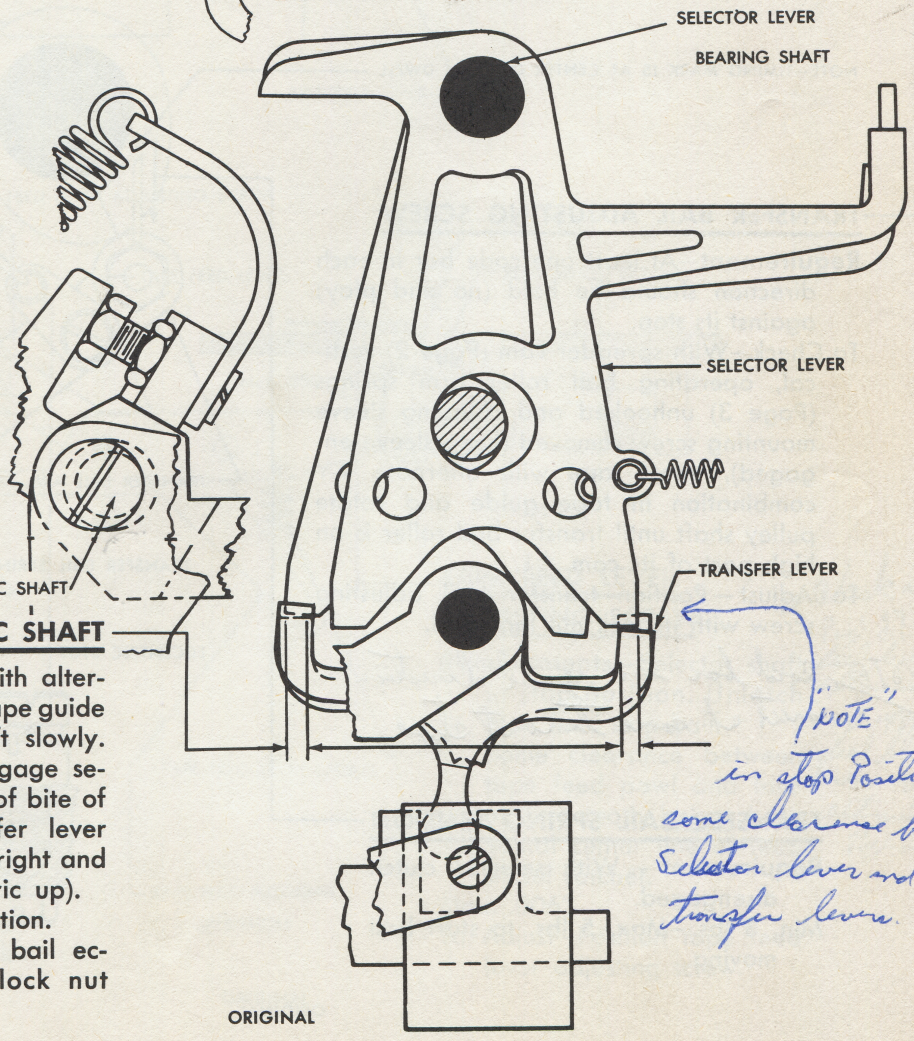

TRANSFER BAIL ECCENTRIC SHAFT

Requirement—Insert tape with alternate 4-Y combination in tape guide and rotate selector shaft slowly. When transfer levers engage selector lever, the amount of bite of selector lever on transfer lever should be same on both right and left. (High part of eccentric up).

Check both 4 and Y combination.

To Adjust—Position transfer bail eccentric shaft with its lock nut loosened.

"NOTE"
in stop Position
some clearance between
Selector lever and
transfer levers.

ORIGINAL

SELECTING ASSEMBLY

Requirement—Insert tape with alternate 4-Y combination in tape guide, rotate pulley shaft until code bars start to move. Raise transfer bail (manually) to its extreme limit. At least one code bar in each direction should be against its stop. Check both 4 and Y combination.

To Adjust—Shift the selecting assembly to right or left with its mounting screws loosened and the eccentric stop moved away from plate.

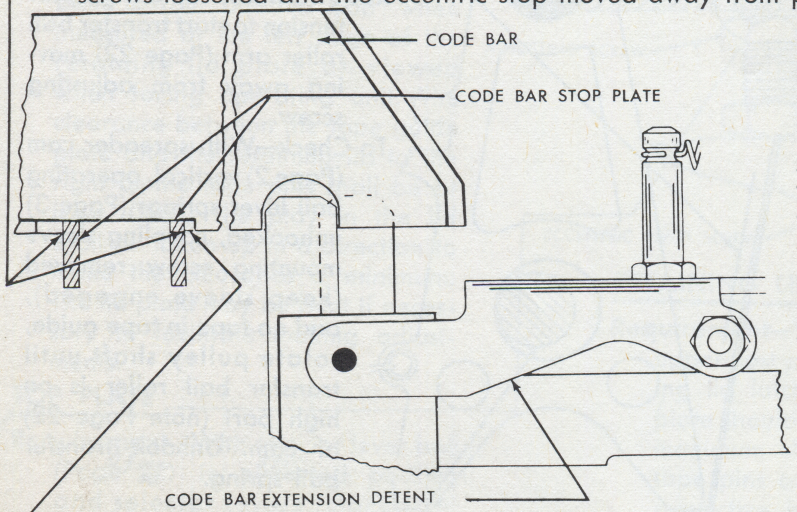

NOTE—Following related adjustments may be disturbed in making above adjustment (recheck completed adjustments).

Selector lever bail adjusting screw (Page 21).
Transfer bail eccentric shaft (Page 21).
Transfer bail adjusting screw (Page 22).
Tape feed lever adjusting screw (Page 23).
Delay feed pawl operating lever (Page 26).
Delay push bail adjusting screw (Page 26).
Tape feed blocking arm lower extension (Page 27).
Tape feed blocking arm upper extension (Page 28).

TRANSFER BAIL ADJUSTING SCREW

Requirement—At least one code bar in each direction should be held (no end play) against its stop.

To Check—With spreader cam (Page 2) vertical, operating bail roller arm springs (Page 3) unhooked and coupling sleeve mounting screw removed (keep sleeve engaged), insert tape with alternate 4-Y combination in tape guide and rotate pulley shaft until transfer bail roller is on high part of its cam #1.

To Adjust—Position transfer bail adjusting screw with its lock nut loosened.

NOTE code bar in equal direction meet at same time at stops

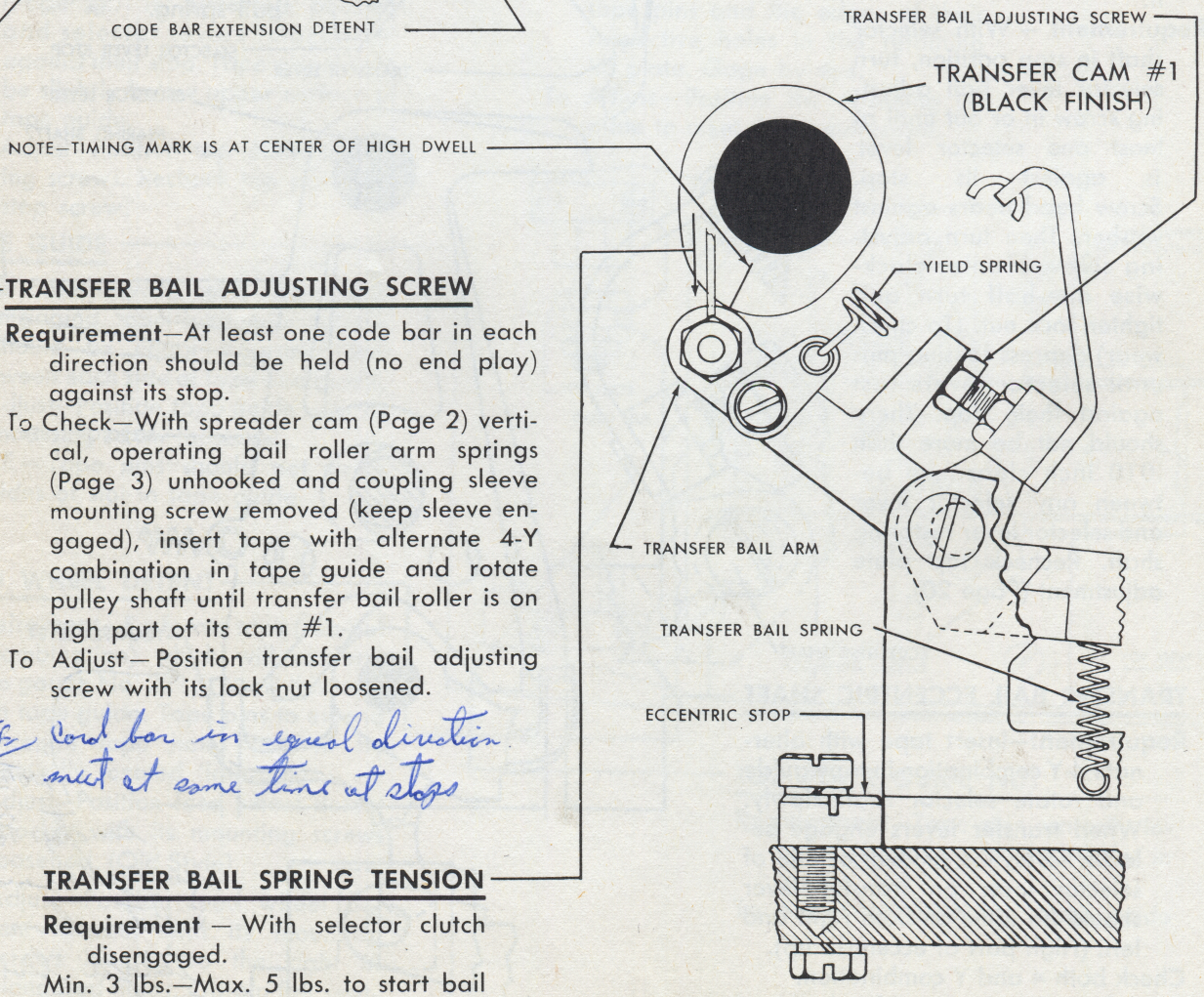

TRANSFER BAIL SPRING TENSION

Requirement — With selector clutch disengaged.

Min. 3 lbs.—Max. 5 lbs. to start bail moving.

SELECTOR LEVER BAIL YIELD SPRING TENSION

Requirements—Selector levers bail roller on low part of cam #2.
Selector lever bail spring unhooked.
Min. 5½ lbs. Max. 7½ lbs. to start bail moving. Replace spring.

SELECTOR LEVER BAIL SPRING TENSION

Requirements—Selector lever bail roller on low part of cam #2.
Tape pins held down.
Min. 20 ozs.—Max. 28 ozs. to start bail moving.

SELECTOR LEVER SPRING TENSION

Requirements—Selector lever bail roller and transfer bail roller (Page 22) on low part of their respective cam, #2 and #1.
Selector lever bail held down to fully compress yield spring.
Min. 2¼ ozs. Max. 3¼ ozs. to start selector lever moving.

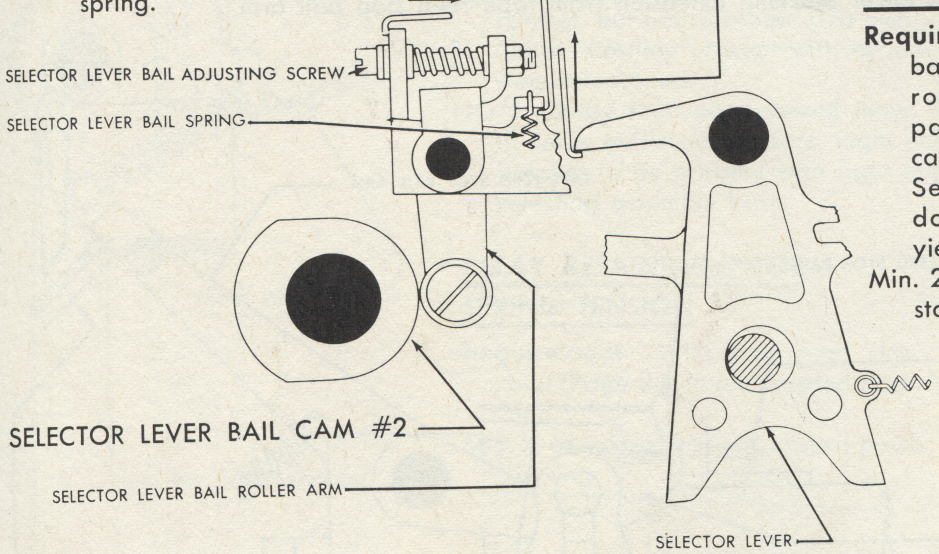

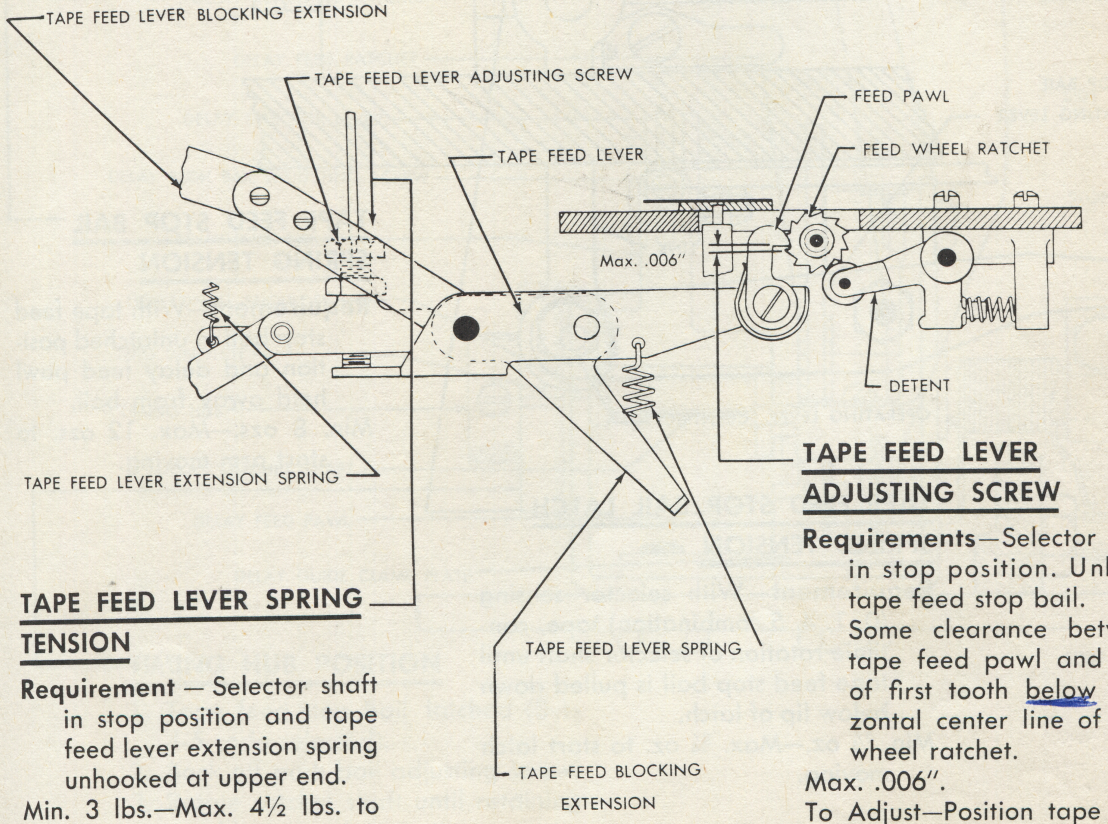

TAPE FEED LEVER SPRING TENSION

Requirement — Selector shaft in stop position and tape feed lever extension spring unhooked at upper end.
Min. 3 lbs.—Max. 4½ lbs. to start lever moving. Rehook spring.

TAPE FEED LEVER ADJUSTING SCREW

Requirements—Selector shaft in stop position. Unlatch tape feed stop bail.
Some clearance between tape feed pawl and face of first tooth below horizontal center line of feed wheel ratchet.
Max. .006".
To Adjust—Position tape feed lever adjusting screw.

Re-Check adjust. Page 27 tape feed lever block extension and upper tape feed blocking over upper extension Page 28

~~200 - Brown, standard~~ - Mechanical tip

~~207 - Brown, standard, ECTM~~

~~20~~