BULLETIN NO. 52
ISSUE 1
NOVEMBER, 1936

TELETYPESETTER

PARTS

STANDARD TELETYPESETTER ACCESSORIES FOR PERMANENT ATTACHMENT TO MODERN LINE-CASTING MACHINES OF AMERICAN MANUFACTURE

(FOR AUTOMATIC 90-CHANNEL OPERATION)

TELETYPESETTER
CORPORATION
1400 WRIGHTWOOD AVE.,
CHICAGO, U.S.A.

BULLETIN NO. 52
ISSUE 1
NOVEMBER, 1936

TELETYPESETTER

PARTS

STANDARD TELETYPESETTER ACCESSORIES FOR PERMANENT ATTACHMENT TO MODERN LINE-CASTING MACHINES OF AMERICAN MANUFACTURE

(FOR AUTOMATIC 90-CHANNEL OPERATION)

TELETYPESETTER
CORPORATION
1400 WRIGHTWOOD AVE.,
CHICAGO, U.S.A.

Copyright 1936, by Teletypesetter Corporation.

Printed in U.S.A.

ALPHABETICAL INDEX

	Page
Assembling Elevator (with Duplex Rail) for Linotype	4
Assembling Elevator (with Duplex Rail) for Intertype	5
Auxiliary Key Bracket for Side-Magazine Linotypes (Teletypesetter Equipped)	8
Belt	8
Cover - L. H.	8
Delivery Follower Parts	7
Elevator Arm and Rod with Linkages to Assembling Elevator	7
Elevator Yield Handle	6
Keyboard for Teletypesetter-Equipped Linotype	1,2
Keyboard for Teletypesetter-Equipped Intertype	3
Key Levers	10
Numerical Index	11,12,13
Pulleys	8
Spring Driven Tape Winder	9

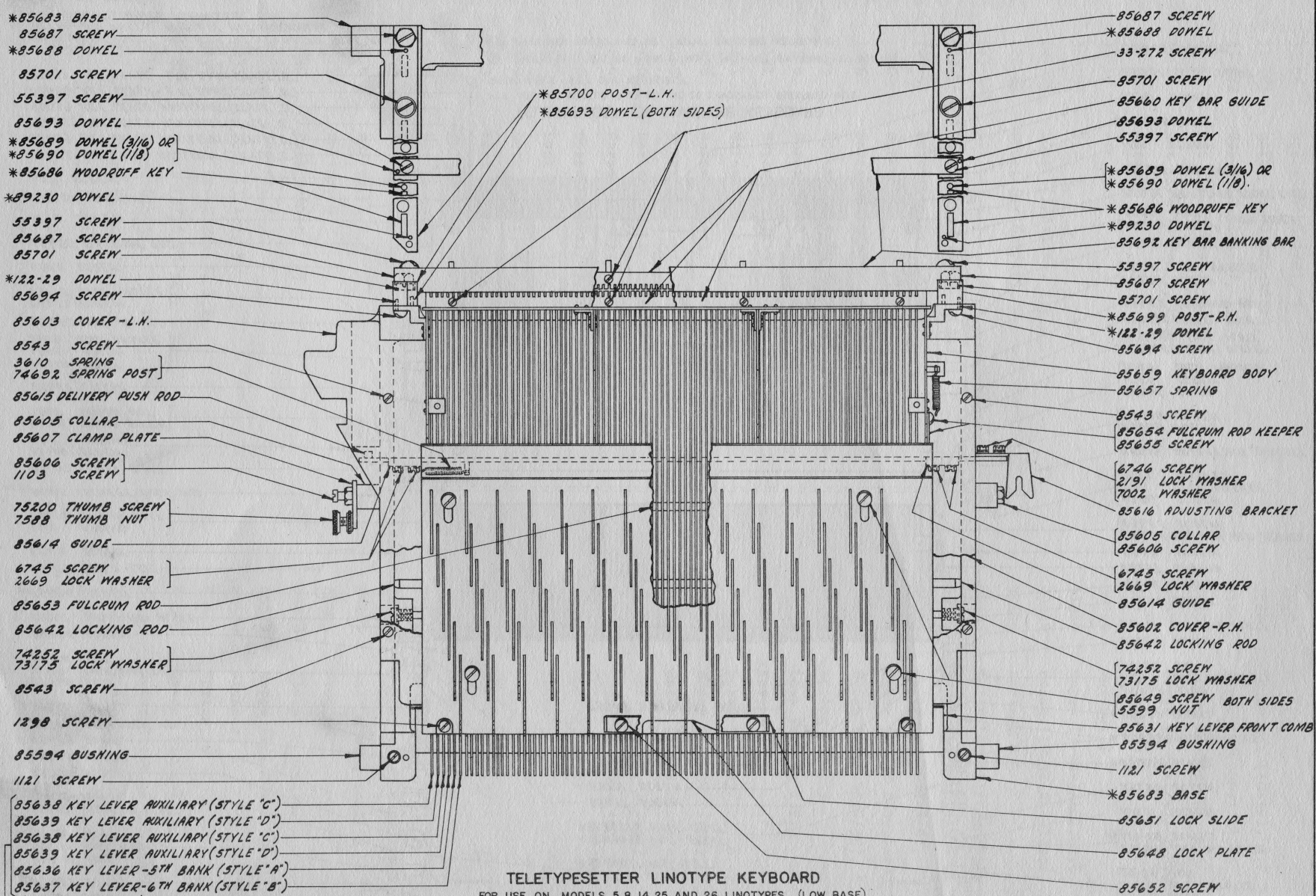

TELETYPESETTER LINOTYPE KEYBOARD

FOR USE ON MODELS 5, 8, 14, 25 AND 26 LINOTYPES (LOW BASE)
NOT EQUIPPED WITH REMOVABLE KEY BAR ASSEMBLY.
LINOTYPES UP TO SERIAL NO. 37809 INCLUSIVE.

* PARTS MARKED WITH AN ASTERISK ENTER A MECHANICAL ASSEMBLY WHICH INCLUDES THE KEYBOARD BASE AND KEYBOARD POSTS, AND ARE NOT NORMALLY REQUIRED FOR MAINTENANCE PURPOSES.

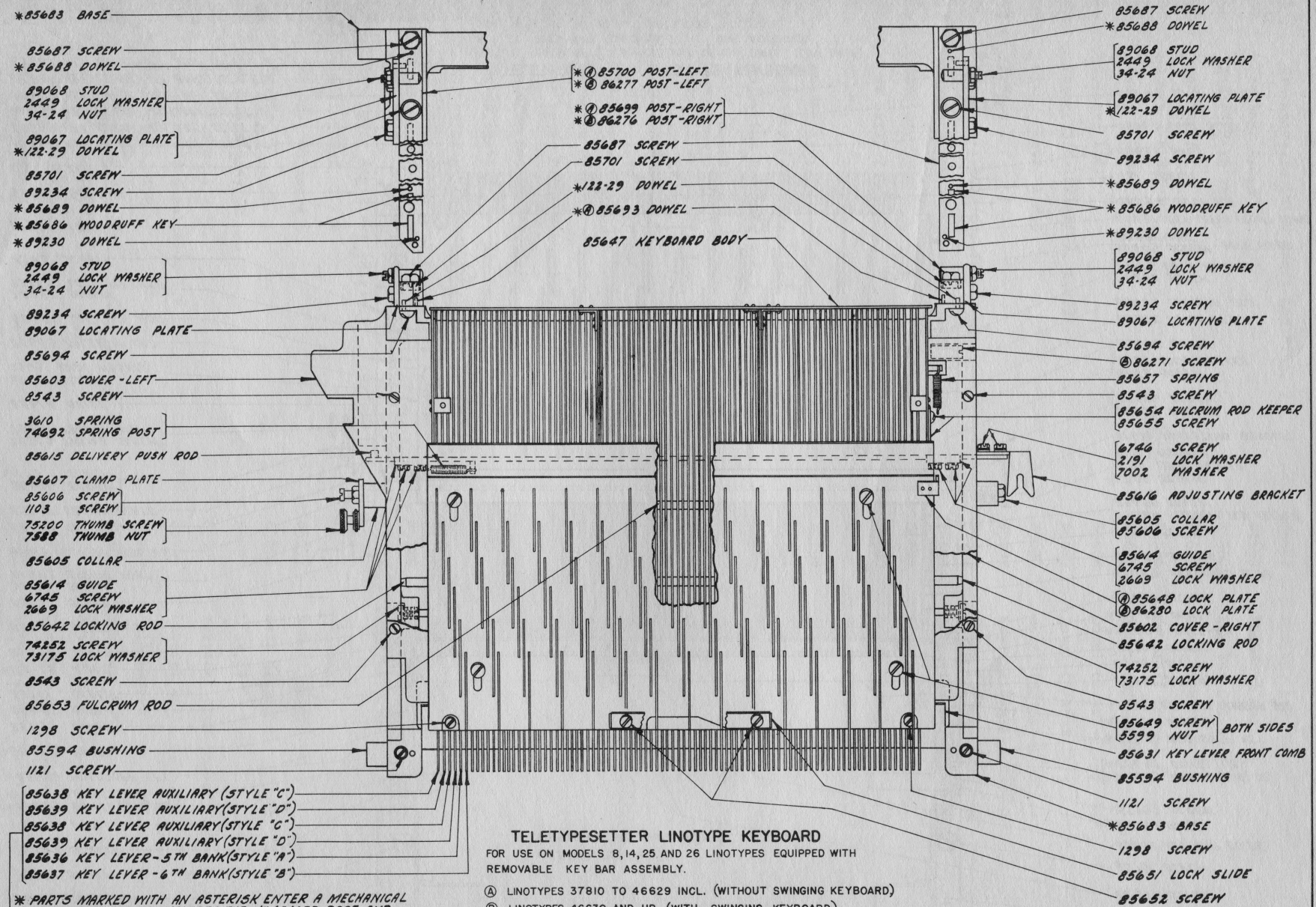

TELETYPESETTER LINOTYPE KEYBOARD

FOR USE ON MODELS 8, 14, 25 AND 26 LINOTYPES EQUIPPED WITH REMOVABLE KEY BAR ASSEMBLY.

Ⓐ LINOTYPES 37810 TO 46629 INCL. (WITHOUT SWINGING KEYBOARD)

Ⓑ LINOTYPES 46630 AND UP (WITH SWINGING KEYBOARD)

* PARTS MARKED WITH AN ASTERISK ENTER A MECHANICAL ASSEMBLY WHICH INCLUDES THE KEYBOARD BASE AND KEYBOARD POSTS, AND ARE NOT NORMALLY REQUIRED FOR MAINTENANCE PURPOSES.

(ALSO SEE PAGE #10)

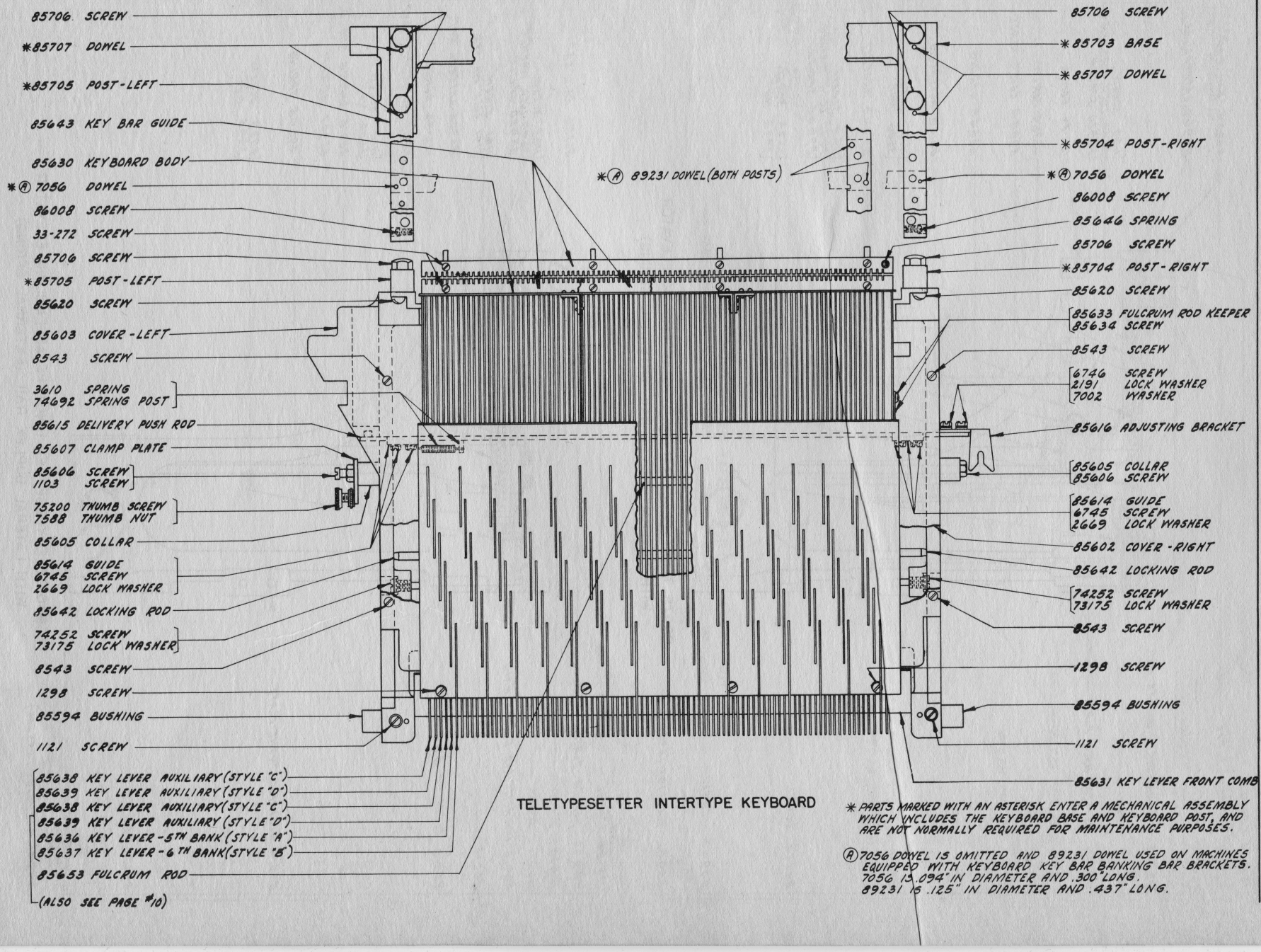

TELETYPESETTER INTERTYPE KEYBOARD

* PARTS MARKED WITH AN ASTERISK ENTER A MECHANICAL ASSEMBLY WHICH INCLUDES THE KEYBOARD BASE AND KEYBOARD POST, AND ARE NOT NORMALLY REQUIRED FOR MAINTENANCE PURPOSES.

Ⓐ 7056 DOWEL IS OMITTED AND 89231 DOWEL USED ON MACHINES EQUIPPED WITH KEYBOARD KEY BAR BANKING BAR BRACKETS. 7056 IS .094" IN DIAMETER AND .300" LONG. 89231 IS .125" IN DIAMETER AND .437" LONG.

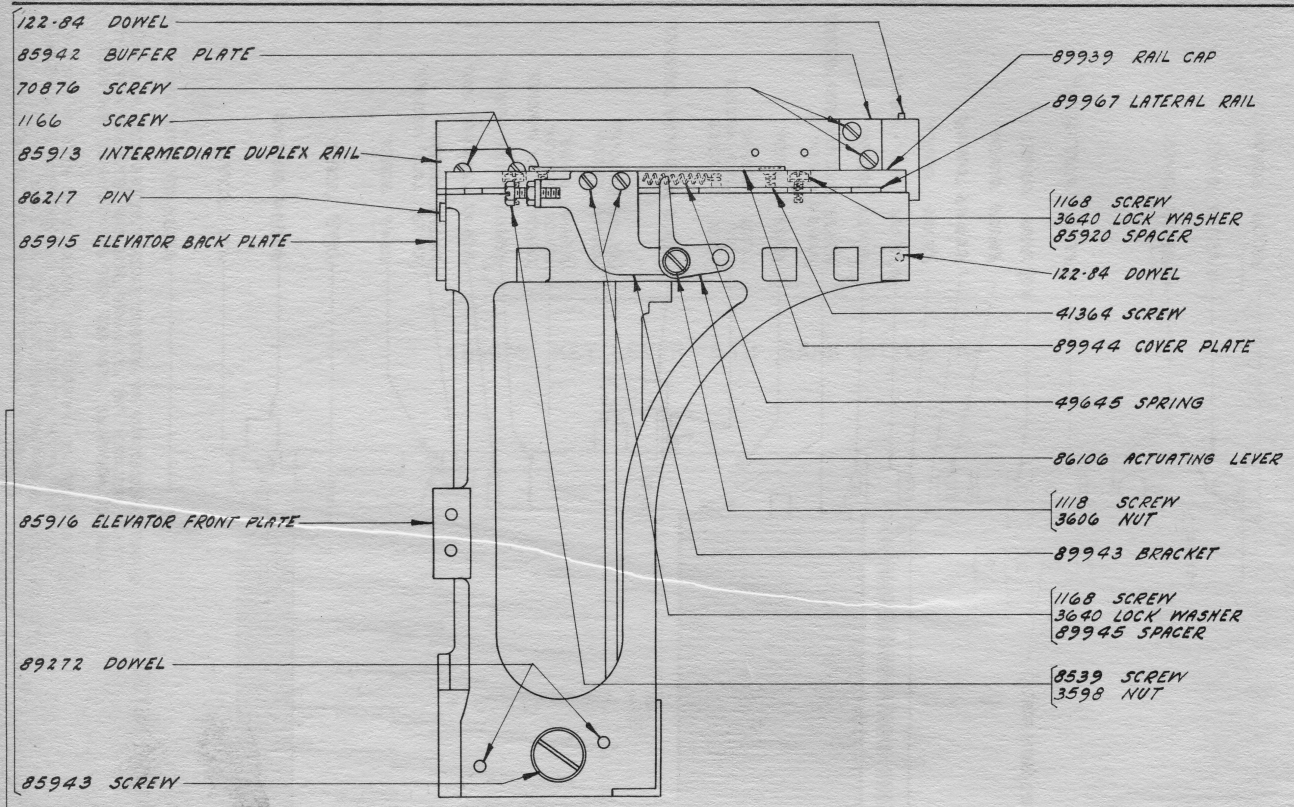

89975 TELETYPESETTER LINOTYPE ASSEMBLING ELEVATOR
WITH LATERAL DUPLEX RAIL (INTERNAL SPRING)

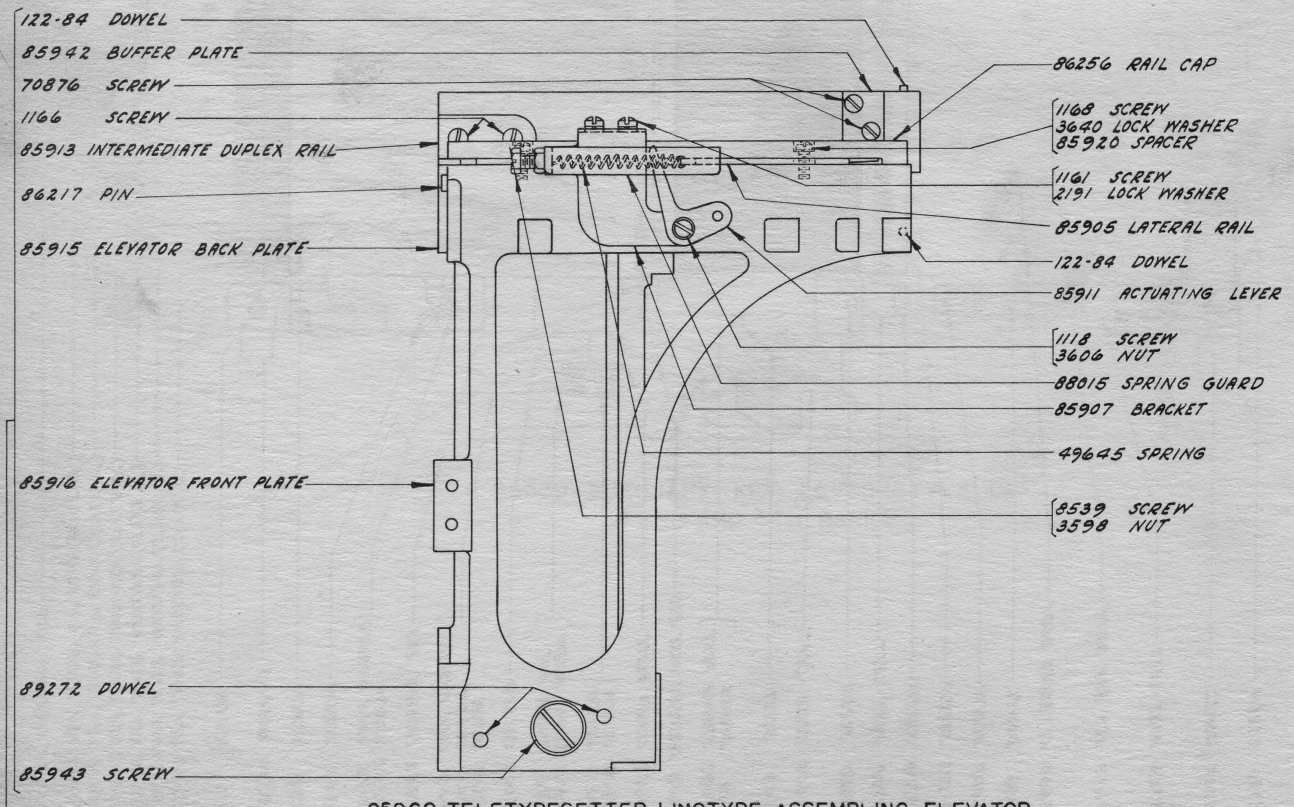

85960 TELETYPESETTER LINOTYPE ASSEMBLING ELEVATOR
WITH LATERAL DUPLEX RAIL (EXTERNAL SPRING)

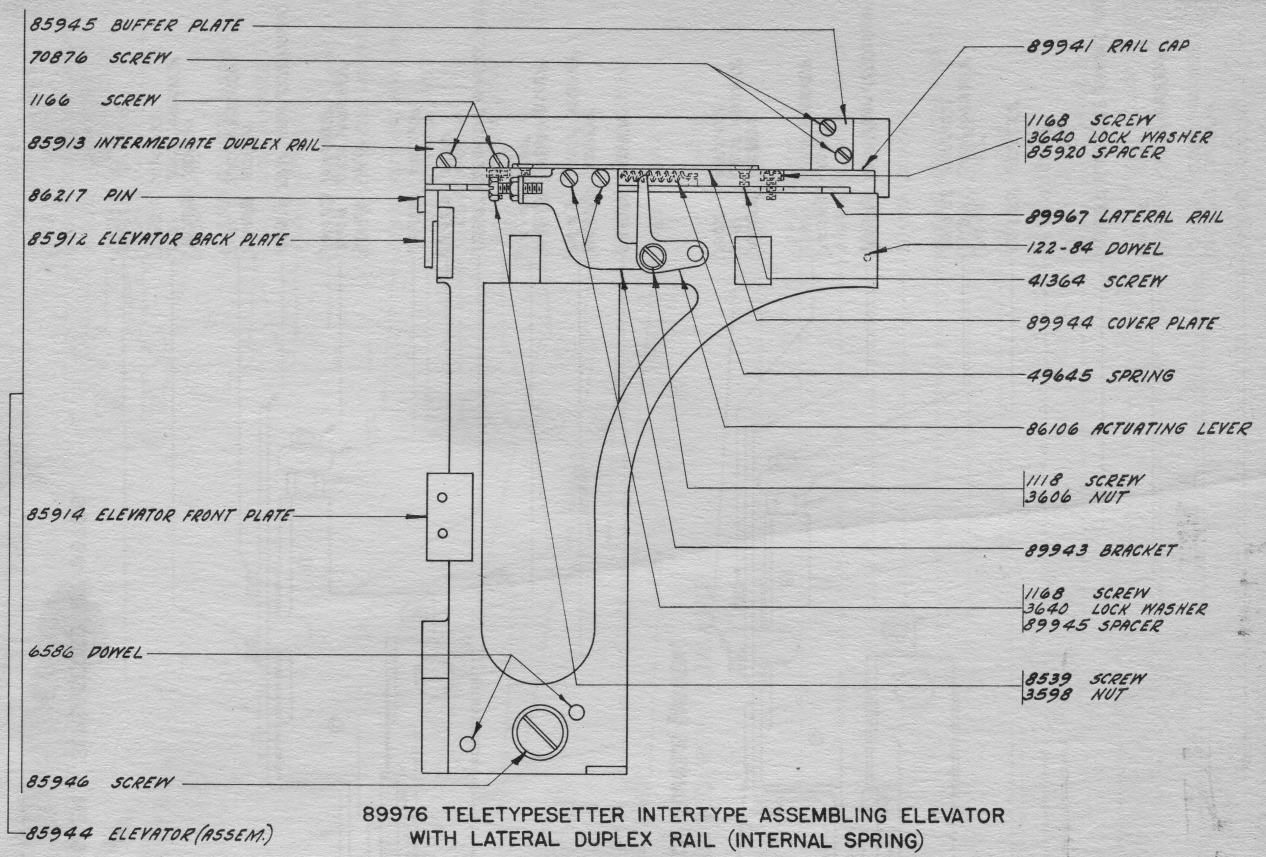

89976 TELETYPESETTER INTERTYPE ASSEMBLING ELEVATOR
WITH LATERAL DUPLEX RAIL (INTERNAL SPRING)

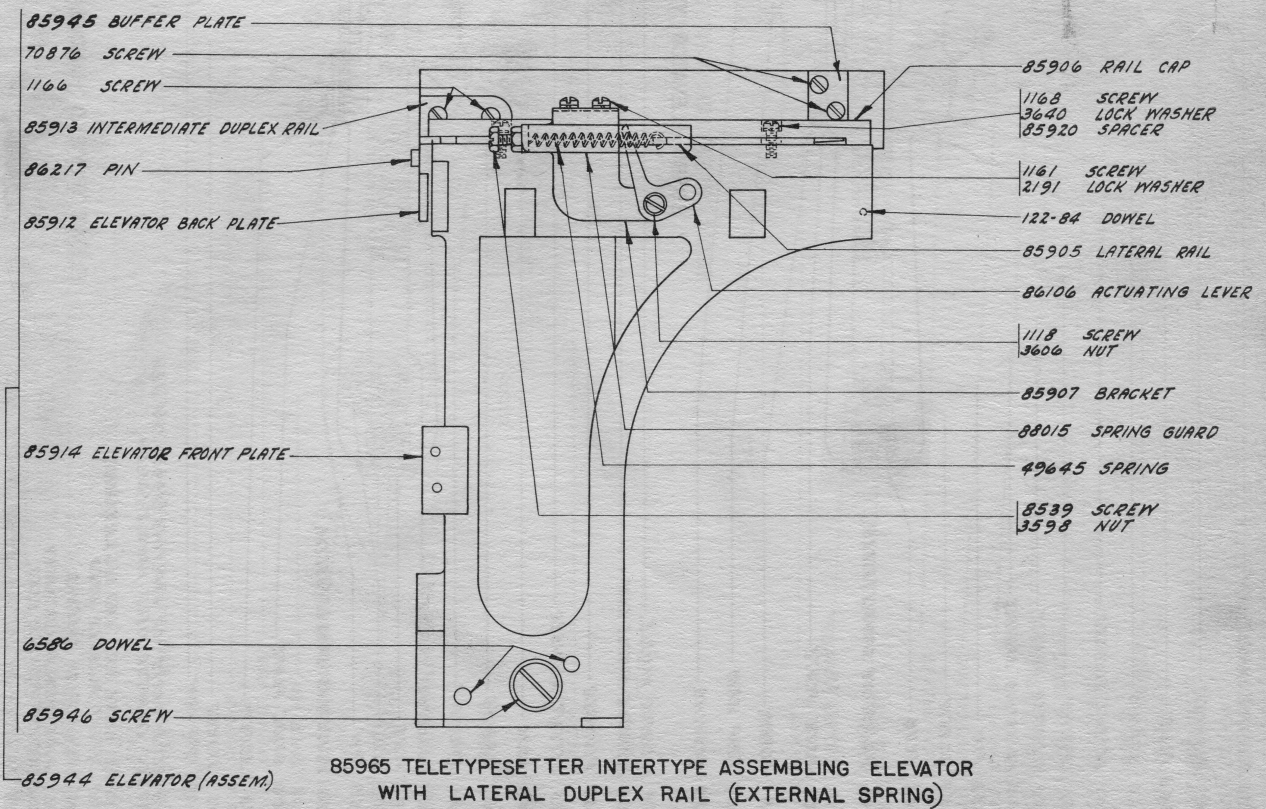

85965 TELETYPESETTER INTERTYPE ASSEMBLING ELEVATOR
WITH LATERAL DUPLEX RAIL (EXTERNAL SPRING)

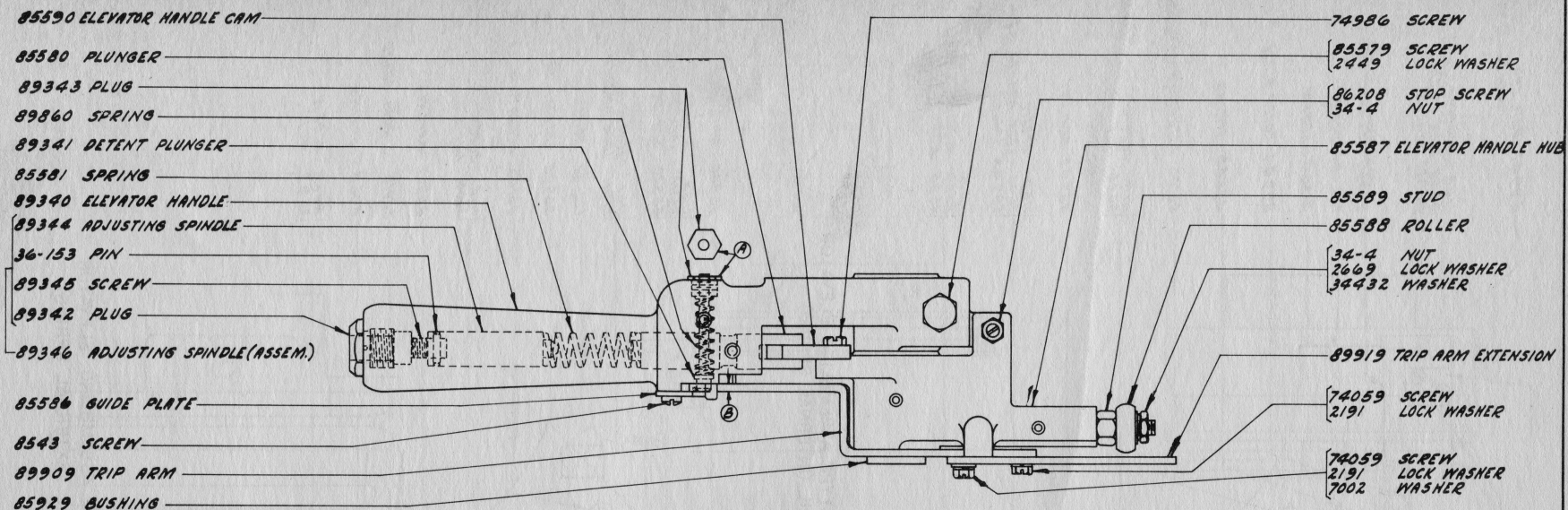

89786 ELEVATOR YIELD HANDLE (ASSEM.)

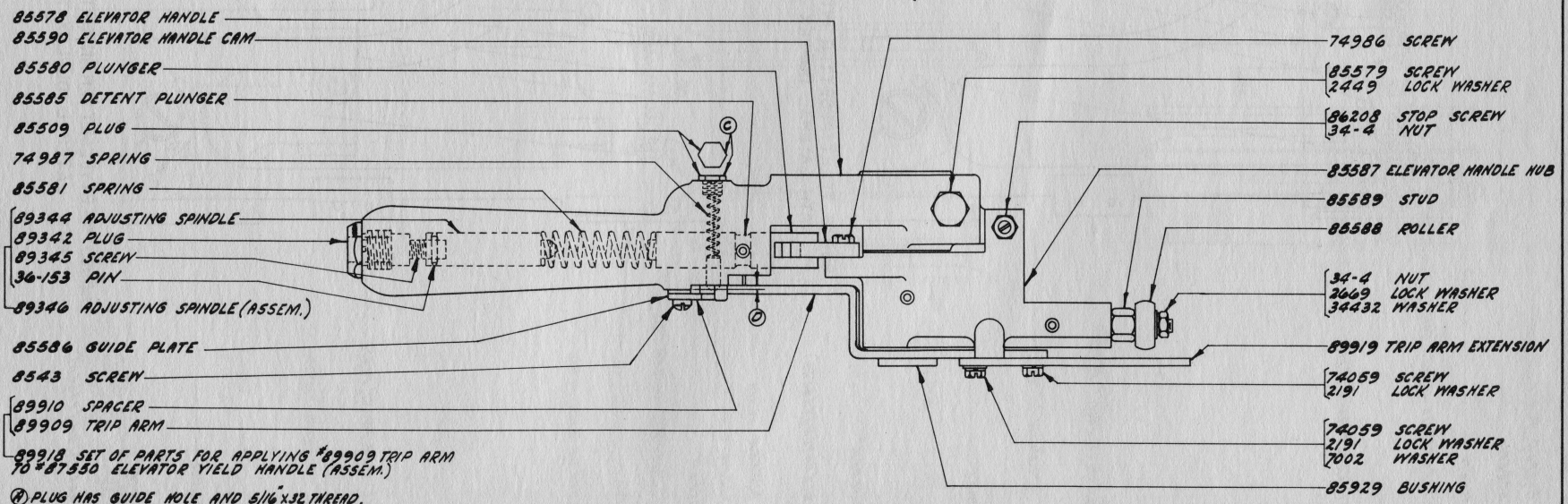

Ⓐ PLUG HAS GUIDE HOLE AND 5/16"×32 THREAD. LONG DETENT PLUNGER USED.
Ⓑ .100" SHOULDER ON CASTING.
Ⓒ SOLID PLUG WITH 1/4"×32 THREAD. SHORT DETENT PLUNGER USED.
Ⓓ .070" SHOULDER ON CASTING. 89910 SPACER USED.

ELEVATOR YIELD HANDLE (ASSEM.) SUPERSEDED BY 89786.

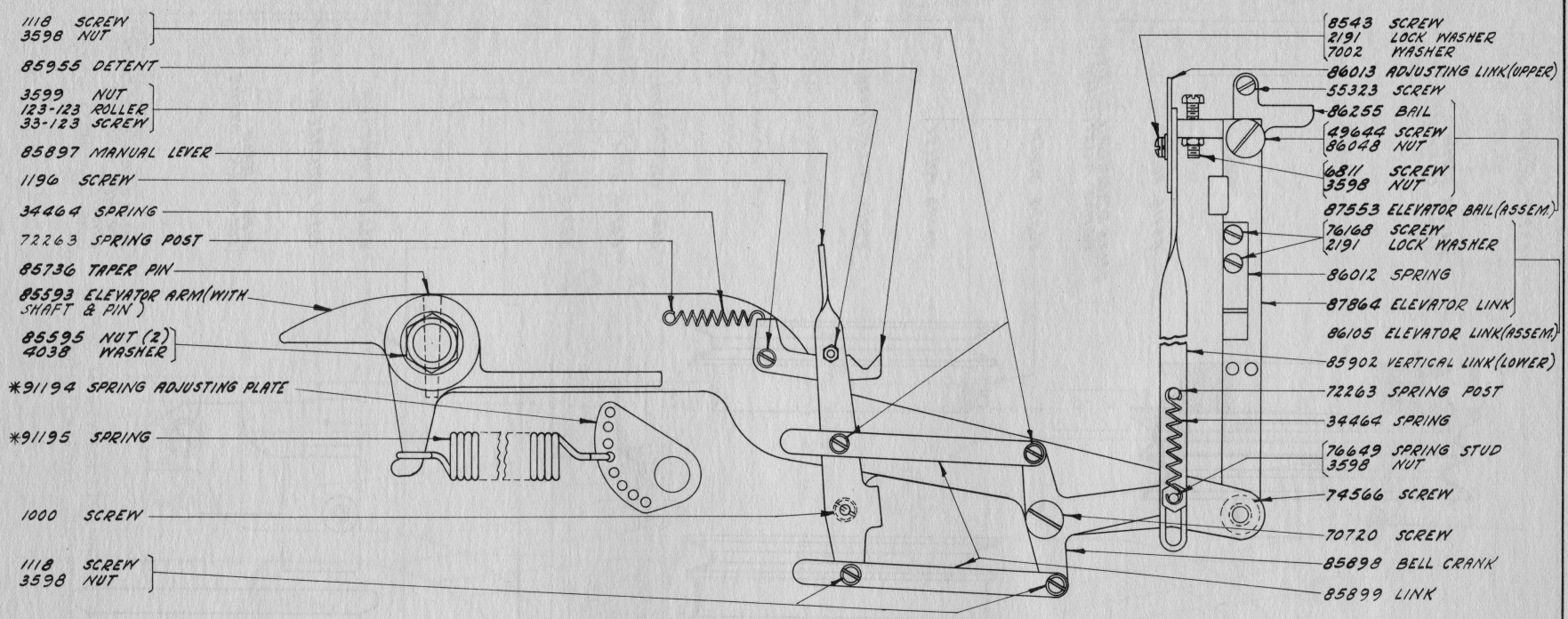

86014 ELEVATOR ARM AND ROD WITH LINKAGES

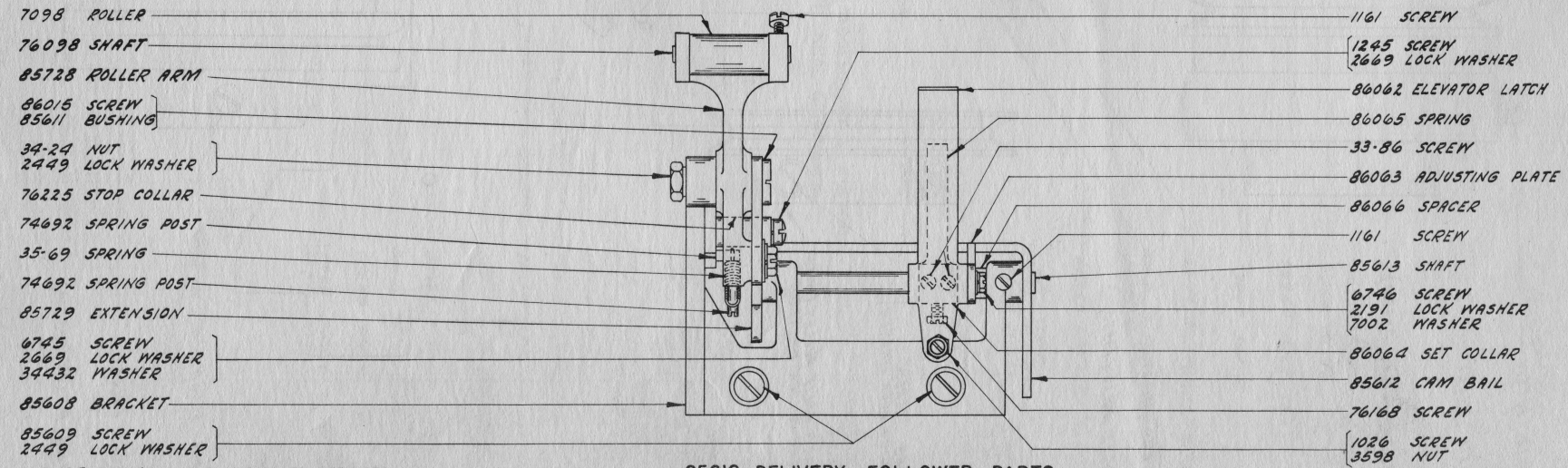

85610 DELIVERY FOLLOWER PARTS

*91195 SPRING AND 91194 PLATE ARE USED IN PLACE OF SPRING 85601 FORMERLY USED.

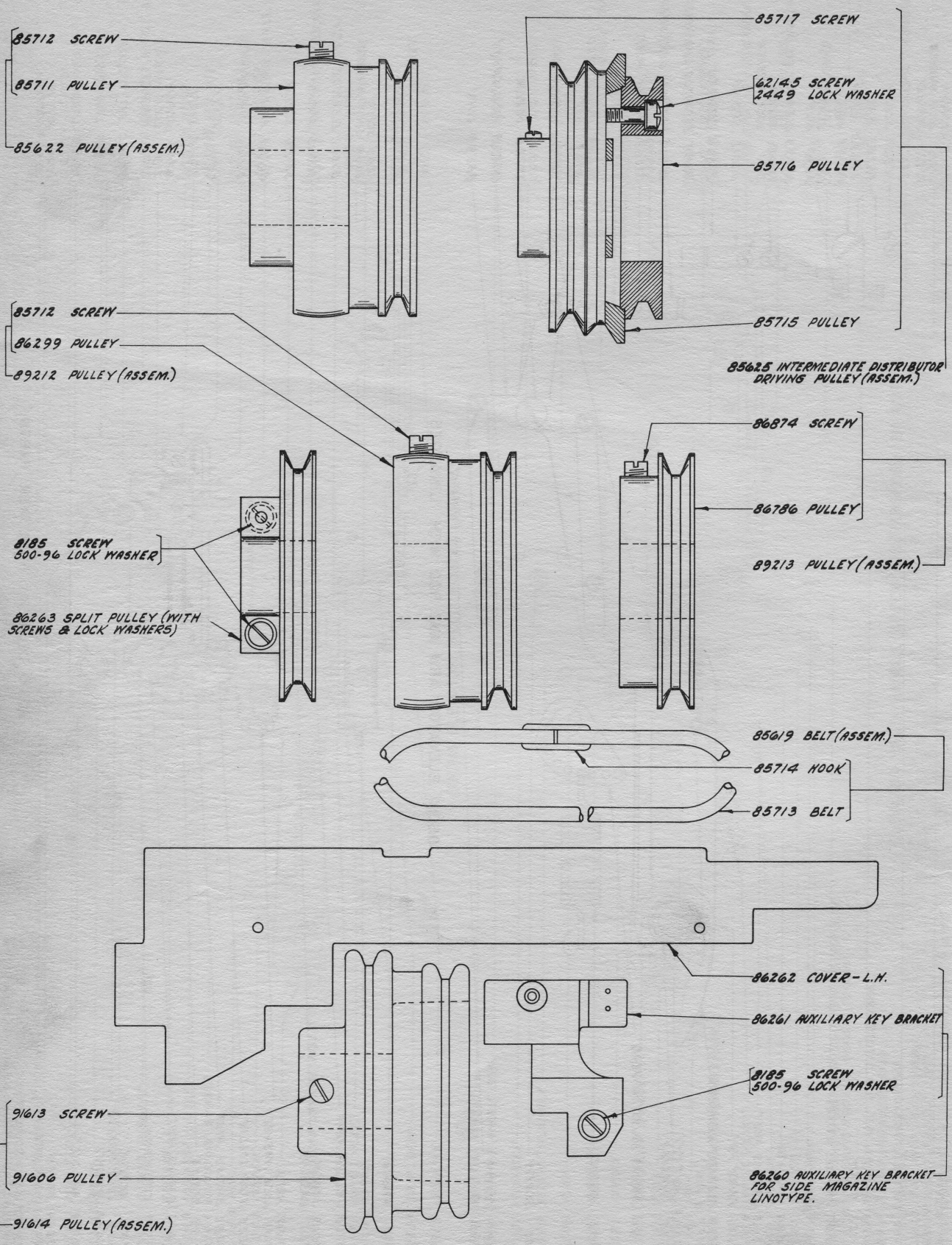
85712 SCREW
85711 PULLEY
85622 PULLEY (ASSEM.)
85717 SCREW
62145 SCREW
2449 LOCK WASHER
85716 PULLEY
85715 PULLEY
85625 INTERMEDIATE DISTRIBUTOR DRIVING PULLEY (ASSEM.)
85712 SCREW
86299 PULLEY
89212 PULLEY (ASSEM.)
86874 SCREW
86786 PULLEY
89213 PULLEY (ASSEM.)
8185 SCREW
500-96 LOCK WASHER
86263 SPLIT PULLEY (WITH SCREWS & LOCK WASHERS)
85619 BELT (ASSEM.)
85714 HOOK
85713 BELT
86262 COVER - L.H.
86261 AUXILIARY KEY BRACKET
8185 SCREW
500-96 LOCK WASHER
91613 SCREW
91606 PULLEY
91614 PULLEY (ASSEM.)
86260 AUXILIARY KEY BRACKET FOR SIDE MAGAZINE LINOTYPE.

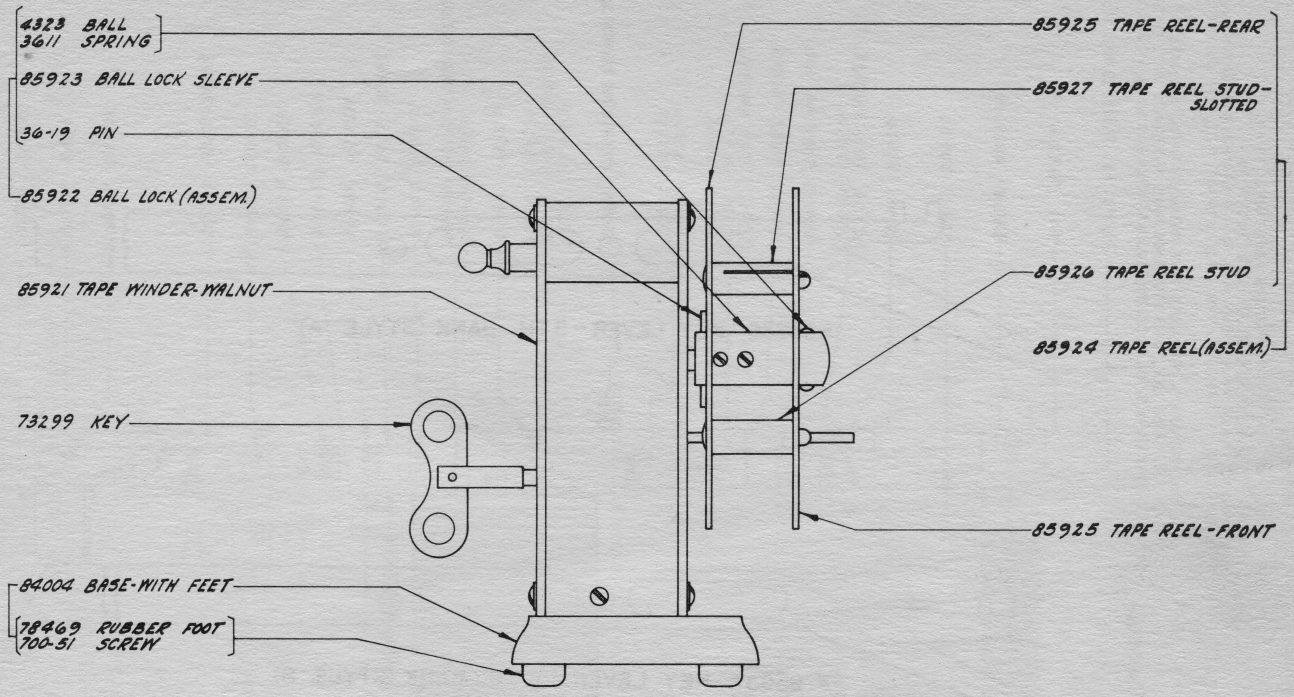

85832 SPRING DRIVEN TAPE WINDER (ASSEM.) - WALNUT
(THIS TAPE WINDER IS NOT ATTACHED TO THE LINE CASTING MACHINE)

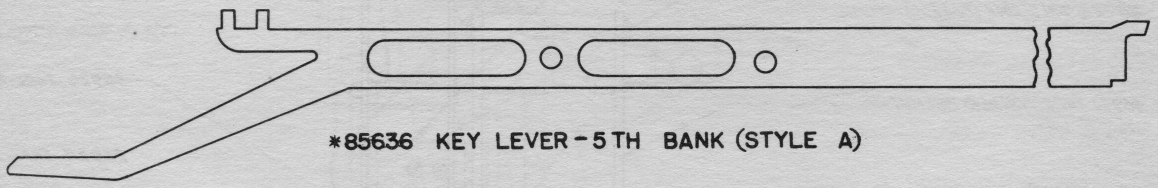

*85636 KEY LEVER - 5TH BANK (STYLE A)

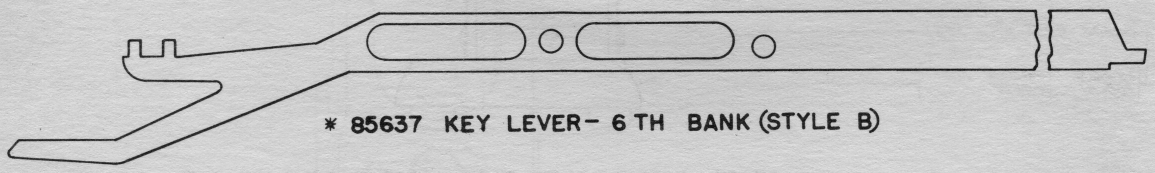

* 85637 KEY LEVER - 6TH BANK (STYLE B)

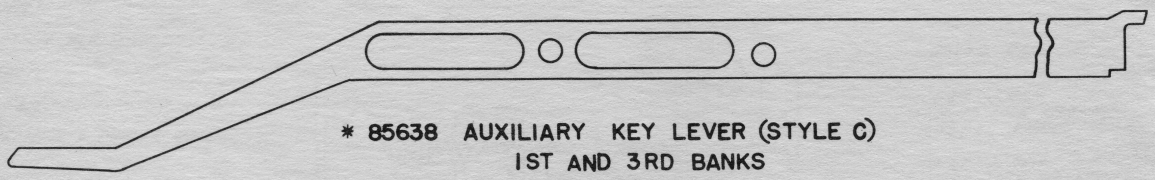

* 85638 AUXILIARY KEY LEVER (STYLE C)
1ST AND 3RD BANKS

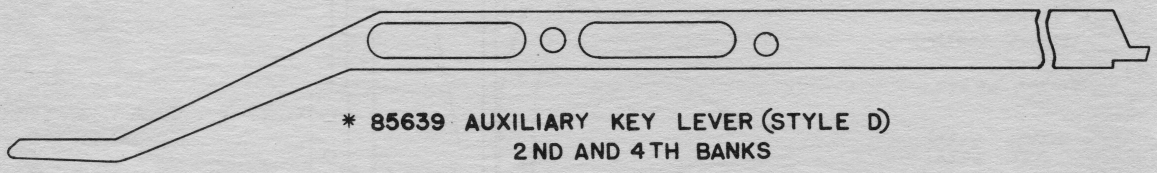

* 85639 AUXILIARY KEY LEVER (STYLE D)
2ND AND 4TH BANKS

ALSO SEE PAGES 1, 2 AND 3

* KEYBANKS ARE NUMBERED 1 TO 6, FROM TOP TO BOTTOM.

NUMERICAL INDEX

33-86	Screw (4-40x1/8), 7
33-123	Screw (4-40 Shoulder), 7
33-272	Screw (8-32x1/4), 1,3
34-4	Nut (10-32 Hex.), 6
34-24	Nut (1/4-32 Hex.), 2,7
35-69	Spring, 7
36-19	Pin, 9
36-153	Pin, 6
122-29	Dowel (1/8x3/8), 1,2
122-84	Dowel (1/16x3/16), 4
123-123	Roller, 7
500-96	Lock Washer, 10
700-51	Screw (4-36x3/8), 9
1000	Screw (3/16-40 Pilot), 7
1026	Screw (6-40x3/8), 7
1103	Screw (3/16-40 Shoulder), 1,2,3
1118	Screw (6-40 Shoulder), 4,5,7
1121	Screw (10-32x3/8), 1,2,3
1161	Screw (6-40x1/4), 4,5,7
1166	Screw (4-36x1/4), 4,5
1168	Screw (4-40x5/16), 4,5
1196	Screw (6-40 Shoulder), 7
1245	Screw (10-32x1), 7
1298	Screw (8-32x1/4), 1,2,3
2191	Lock Washer, 1,2,3,4,5,6,7
2449	Lock Washer, 2,6,7,8
2669	Lock Washer, 1,2,3,6,7
3598	Nut (6-40), 4,5,6,7
3599	Nut (4-40), 7
3606	Nut (6-40), 4,5
3610	Spring, 1,2,3
3611	Spring, 9
3640	Lock Washer, 4,5
4038	Washer, 7
4233	Ball (3/16), 9
5599	Nut (8-32 Hex.), 1,2
6586	Dowel (3/16x23/32), 5
6745	Screw (10-32x1/2), 1,2,3,7
6746	Screw (6-40x5/16), 1,2,3,7
6811	Screw (6-40x5/8), 7
7002	Washer, 1,2,3,6,7
7056	Dowel (3/32x.300), 3
7098	Roller, 7
7588	Thumb Nut (10-32), 1,2,3
8185	Screw (1/4-20x3/4), 8
8539	Screw (6-40x1/2), 4,5
8543	Screw (6-40x1/4), 1,2,3,6,7
34432	Washer, 6,7
34464	Spring, 7
41364	Screw (3-48x3/16), 4,5
49644	Screw (10-32 Shoulder), 7
49645	Spring, 4,5
55323	Screw (8-32x1/2), 7
55397	Screw (14-24x3/4), 1
62145	Screw (14-20x1-3/8), 8
70720	Screw (10-32 Shoulder), 7
70876	Screw (.112-48x9/32), 4,5
72263	Spring Post, 7
73175	Lock Washer, 1,2,3
73299	Key, 9
74059	Screw (6-40x7/32), 6
74252	Screw (3/8-32 Pilot), 1,2,3
74566	Screw (10-32 Shoulder), 7
74692	Spring Post, 1,2,3,7
74986	Screw (6-40x13/32), 6
74987	Spring, 6
75200	Thumb Screw (10-32), 1,2,3
76098	Shaft, 7
76168	Screw (6-40x3/16), 7
76225	Stop Collar, 7
76649	Spring Stud, 7
78469	Rubber Foot, 9
84004	Base - with Feet, 9
85509	Plug, 6
85578	Elevator Handle, 6
85579	Screw (1/4-20x1), 6
85580	Plunger, 6
85581	Spring, 6
85585	Detent Plunger, 6
85586	Guide Plate, 6
85587	Elevator Handle Hub, 6
85588	Roller, 6
85589	Stud, 6
85590	Elevator Handle Cam, 6

NUMERICAL INDEX

85593 Elevator Arm (with Shaft and Pin), 7
85594 Bushing, 1,2,3
85595 Nut (3/8-16 Hex.), 7
85601 Spring, 7
85602 Cover - R.H., 1,2,3
85603 Cover - L.H., 1,2,3
85605 Collar, 1,2,3
85606 Screw (3/8-16x1-1/4), 1,2,3
85607 Clamp Plate, 1,2,3
85608 Bracket, 7
85609 Screw (1/4-20x5/8), 7
85610 Delivery Follower Parts (Assem.), 7
85611 Bushing, 7
85612 Cam Bail, 7
85613 Shaft, 7
85614 Guide, 1,2,3
85615 Delivery Push Rod, 1,2,3
85616 Adjusting Bracket, 1,2,3
85619 Belt (Assem.), 8
85620 Screw (1/4-24x3/8), 3
85622 Pulley (Assem.), 8
85625 Intermediate Distributor Driving Pulley (Assem.), 8
85630 Keyboard Body, 3
85631 Key Lever Front Comb, 1,2,3
85633 Fulcrum Rod Keeper, 3
85634 Screw (4-48x3/16), 3
85636 Key Lever - 5th Bank (Style A), 1,2,3,10
85637 Key Lever - 6th Bank (Style B), 1,2,3,10
85638 Key Lever Auxiliary (Style C), 1,2,3,10
85639 Key Lever Auxiliary (Style D), 1,2,3,10
85642 Locking Rod, 1,2,3
85643 Key Bar Guide, 3
85646 Spring, 3
85647 Keyboard Body, 2
85648 Lock Plate, 1,2
85649 Screw (8-32 Shoulder), 1,2
85651 Lock Slide, 1,2
85652 Screw (8-32 Shoulder), 1,2
85653 Fulcrum Rod, 1,2,3
85654 Fulcrum Rod Keeper, 1,2
85655 Screw (4-48x5/32), 1,2
85657 Spring, 1,2
85659 Keyboard Body, 1
85660 Key Bar Guide, 1
85683 Base, 1,2
85686 Woodruff Key, 1,2
85687 Screw (3/8-16x1-1/4), 1,2
85688 Dowel (1/4x1-3/16), 1,2
85689 Dowel (3/16x1-15/32), 1,2
85690 Dowel (3/16x1-7/32), 1
85692 Key Bar Banking Bar, 1
85693 Dowel (3/32x9/16), 1,2
85694 Screw (14-24x3/8), 1,2
85699 Post - R.H., 1,2
85700 Post - L.H., 1,2
85701 Screw (3/8-16x7/8), 1,2
85703 Base, 3
85704 Post - R.H., 3
85705 Post - L.H., 3
85706 Screw (3/8-16x1-1/4), 3
85707 Dowel (1/8x1), 3
85711 Pulley, 8
85712 Screw (3/8-16x1-3/16), 8
85713 Belt, 8
85714 Hook, 8
85715 Pulley, 8
85716 Pulley, 8
85717 Screw (1/4-24x3/8), 8
85728 Roller Arm, 7
85729 Extension, 7
85736 Taper Pin, 7
85832 Spring Driven Tape Winder (Assem.) - Walnut, 9
85897 Manual Lever, 7
85898 Bell Crank, 7
85899 Link, 7
85902 Vertical Link (Lower), 7
85905 Lateral Rail, 4,5
85906 Rail Cap, 5
85907 Bracket, 4,5
85911 Actuating Lever, 4
85912 Elevator Back Plate, 5
85913 Intermediate Duplex Rail, 4,5

85914 Assembling Elevator, 5
85915 Elevator Back Plate, 4
85916 Assembling Elevator, 4
85920 Spacer, 4,5
85921 Tape Winder - Walnut, 9
85922 Ball Lock (Assem.), 9
85923 Ball Lock Sleeve, 9
85924 Tape Reel (Assem.), 9
85925 Tape Reel - Rear, 9
85926 Tape Reel Stud, 9
85927 Tape Reel Stud - Slotted, 9
85929 Bushing, 6
85941 Elevator (Assem.), 4
85942 Buffer Plate, 4
85943 Screw (3/8-16x7/8), 4
85944 Elevator (Assem.), 5
85945 Buffer Plate, 5
85946 Screw (3/8-16x1-1/8), 5
85960 Lateral Duplex Rail for Linotype (Old Style), 4
85965 Lateral Duplex Rail for Intertype (Old Style), 5
86008 Screw (8-32x9/16), 3
86012 Spring, 7
86013 Adjusting Link (Upper), 7
86014 Elevator Arm and Rod, 7
86015 Screw (1/4-32 Shoulder), 7
86048 Nut (10-32 Special), 7
86062 Elevator Latch, 7
86063 Adjusting Plate, 7
86064 Set Collar, 7
86065 Spring, 7
86066 Spacer, 7
86105 Elevator Link (Assem.), 7
86106 Actuating Lever, 4,5
86208 Screw (10-32x9/16), 6
86217 Pin, 4,5
86255 Bail, 7
86256 Rail Cap, 4
86260 Auxiliary Key Bracket for Side Magazine Linotype, 8
86261 Auxiliary Key Bracket, 8
86262 Cover - L.H., 8
86263 Pulley (with Screws and Lock Washers), 8
86271 Screw (3/8-16x2), 2
86276 Post - R.H., 2
86277 Post - L.H., 2
86280 Lock Plate, 2
86299 Pulley, 8
86786 Pulley, 8
86874 Screw (3/8-16x13/16), 8
87550 Elevator Yield Handle (Assem.), 6
87553 Elevator Bail (Assem.), 7
87864 Elevator Link, 7
89067 Locating Plate, 2
89068 Stud, 2
89212 Pulley (Assem.), 8
89213 Pulley (Assem.), 8
89230 Dowel (3/32x11/32), 1,2
89231 Dowel (1/8x7/16), 3
89234 Screw (5/16-18x1/2), 2
89272 Dowel, 4
89340 Elevator Handle, 6
89341 Detent Plunger, 6
89342 Plug, 6
89343 Plug, 6
89344 Adjusting Spindle, 6
89345 Screw (1/4-32x29/32), 6
89346 Adjusting Spindle (Assem.), 6
89786 Elevator Yield Handle (Assem.), 6
89860 Spring, 6
89909 Trip Arm, 6
89910 Spacer, 6
89918 Set of Parts for Applying 89909 Trip Arm to 87550 Elevator Yield Handle (Assem.),6
89919 Trip Arm Extension, 6
89939 Rail Cap, 4
89941 Rail Cap, 5
89943 Bracket, 4,5
89944 Cover Plate, 4,5
89945 Spacer, 4,5
89967 Lateral Rail, 4,5
89975 Lateral Duplex Rail for Linotype (New Style), 4
89976 Lateral Duplex Rail for Intertype (New Style), 5
91194 Spring Adjusting Plate, 7
91195 Spring, 7
91614 Pulley (Assem.), 8