TELETYPESETTER®

BULLETIN 50B

PARTS FOR THE STANDARD PERFORATOR

FAIRCHILD
GRAPHIC EQUIPMENT FAIRCHILD DRIVE, PLAINVIEW, L. I., NEW YORK

TELETYPESETTER®

BULLETIN 50B

PARTS FOR THE STANDARD PERFORATOR

FAIRCHILD
GRAPHIC EQUIPMENT

DIVISION OF
FAIRCHILD CAMERA AND INSTRUMENT CORP

Copyright 1952 by Fairchild Camera and Instrument Corp. Copyright in all countries participating in International Convention and Pan American Conventions. All rights reserved including rights of translations into all languages.

Printed in U.S.A.

LIST OF EFFECTIVE PAGES

NOVEMBER, 1957

PAGE NUMBERS	CHANGE IN EFFECT	PAGE NUMBERS	CHANGE IN EFFECT
A	CHANGE 2	18	CHANGE 2
B	CHANGE 1	19	CHANGE 1
1 and 2	CHANGE 1	20 to 23	CHANGE 2
3 and 4	CHANGE 2		
5 to 7	CHANGE 1		
8 and 9	ORIGINAL.		
10 to 15	CHANGE 2		
16 and 17	CHANGE 1		

The above list indicates the effective pages as of the date of issue. When a change takes place in any of the following pages, this page likewise changes.

ALPHABETICAL INDEX

	Page
Base Assembly	1, 2
Chad Chute and Chad Box	12
Clutch Shaft Assembly	5
Counting Clutch Shaft	4
Counting Code Levers	6, 19
Counting (Matrix) Pointer and Scale Assembly	9
Counting Selector Bars	7
Counting Selector Bar Assembly	7
Counting Selector Bar Links	7
Cover	13
Cross Bar Assembly	9
Keylevers	1
Keytops	1
Lamp and Socket	10
Main Clutch Shaft	3
Main Clutch Stop Lever and Latch	6
Motors	14, 15, 16, 17
Motor Gears, Pinions, and Fan	18
Numerical Index	21, 22, 23
Perforating Selector Bars	6
Perforating Selector Bar Assembly	6
Pointer Drive Shaft and Gear	7
Punch Block Assembly	12
Punch Hammer Operating Lever	12
Punch Unit Assembly	11
Return Clutch Lever Assembly	7
Shift-Unshift Mechanism	6
Spaceband (Justification) Pointers Assembly	8
Tape Container	13
Terminal Block	10
Tools	20

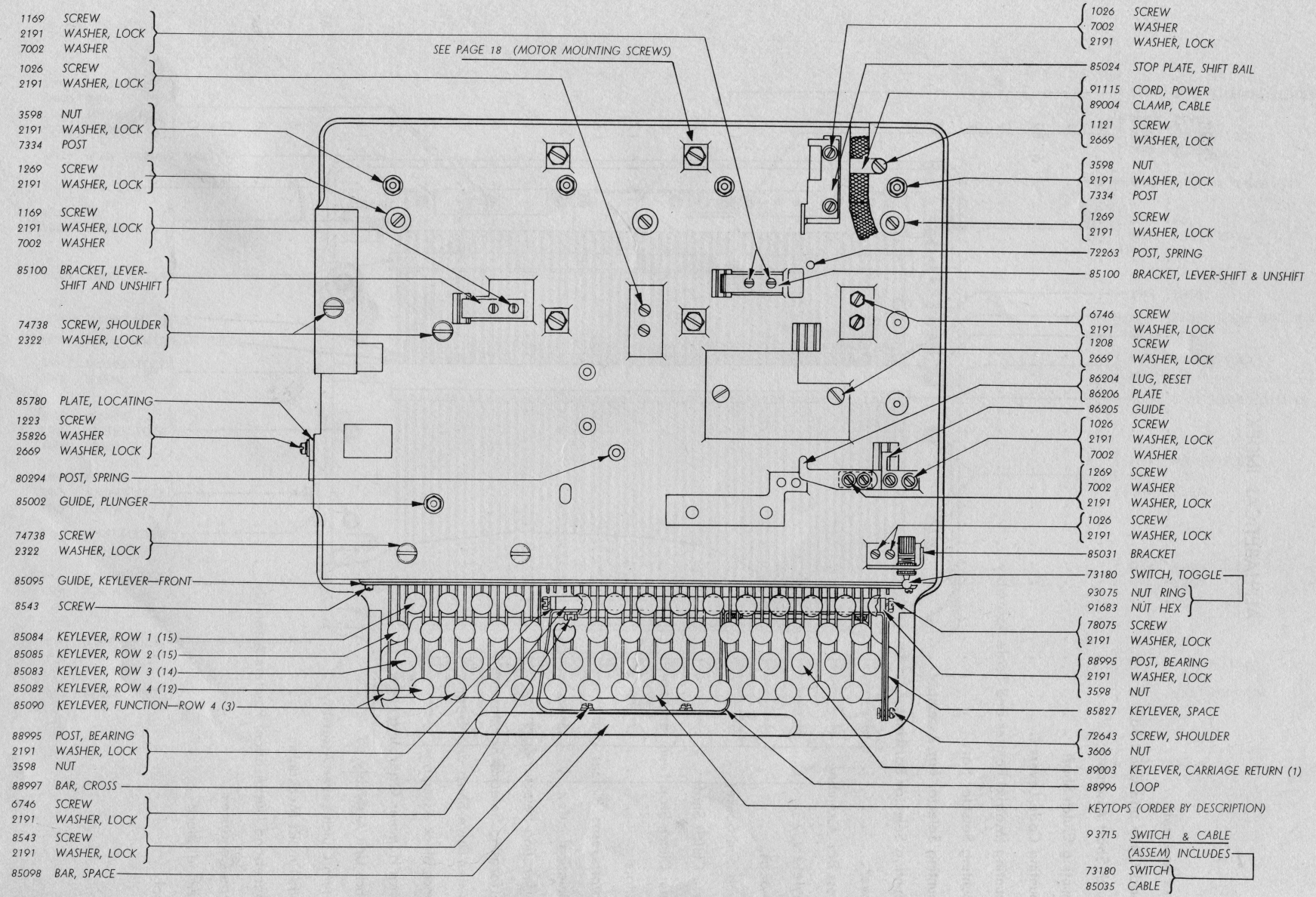
1169 SCREW
2191 WASHER, LOCK
7002 WASHER
1026 SCREW
2191 WASHER, LOCK
3598 NUT
2191 WASHER, LOCK
7334 POST
1269 SCREW
2191 WASHER, LOCK
1169 SCREW
2191 WASHER, LOCK
7002 WASHER
85100 BRACKET, LEVER-SHIFT AND UNSHIFT
74738 SCREW, SHOULDER
2322 WASHER, LOCK
85780 PLATE, LOCATING
1223 SCREW
35826 WASHER
2669 WASHER, LOCK
80294 POST, SPRING
85002 GUIDE, PLUNGER
74738 SCREW
2322 WASHER, LOCK
85095 GUIDE, KEYLEVER—FRONT
8543 SCREW
85084 KEYLEVER, ROW 1 (15)
85085 KEYLEVER, ROW 2 (15)
85083 KEYLEVER, ROW 3 (14)
85082 KEYLEVER, ROW 4 (12)
85090 KEYLEVER, FUNCTION—ROW 4 (3)
88995 POST, BEARING
2191 WASHER, LOCK
3598 NUT
88997 BAR, CROSS
6746 SCREW
2191 WASHER, LOCK
8543 SCREW
2191 WASHER, LOCK
85098 BAR, SPACE
SEE PAGE 18 (MOTOR MOUNTING SCREWS)
1026 SCREW
7002 WASHER
2191 WASHER, LOCK
85024 STOP PLATE, SHIFT BAIL
91115 CORD, POWER
89004 CLAMP, CABLE
1121 SCREW
2669 WASHER, LOCK
3598 NUT
2191 WASHER, LOCK
7334 POST
1269 SCREW
2191 WASHER, LOCK
72263 POST, SPRING
85100 BRACKET, LEVER-SHIFT & UNSHIFT
6746 SCREW
2191 WASHER, LOCK
1208 SCREW
2669 WASHER, LOCK
86204 LUG, RESET
86206 PLATE
86205 GUIDE
1026 SCREW
2191 WASHER, LOCK
7002 WASHER
1269 SCREW
7002 WASHER
2191 WASHER, LOCK
1026 SCREW
2191 WASHER, LOCK
85031 BRACKET
73180 SWITCH, TOGGLE
93075 NUT RING
91683 NUT HEX
78075 SCREW
2191 WASHER, LOCK
88995 POST, BEARING
2191 WASHER, LOCK
3598 NUT
85827 KEYLEVER, SPACE
72643 SCREW, SHOULDER
3606 NUT
89003 KEYLEVER, CARRIAGE RETURN (1)
88996 LOOP
KEYTOPS (ORDER BY DESCRIPTION)
93715 SWITCH & CABLE (ASSEM) INCLUDES
73180 SWITCH
85035 CABLE

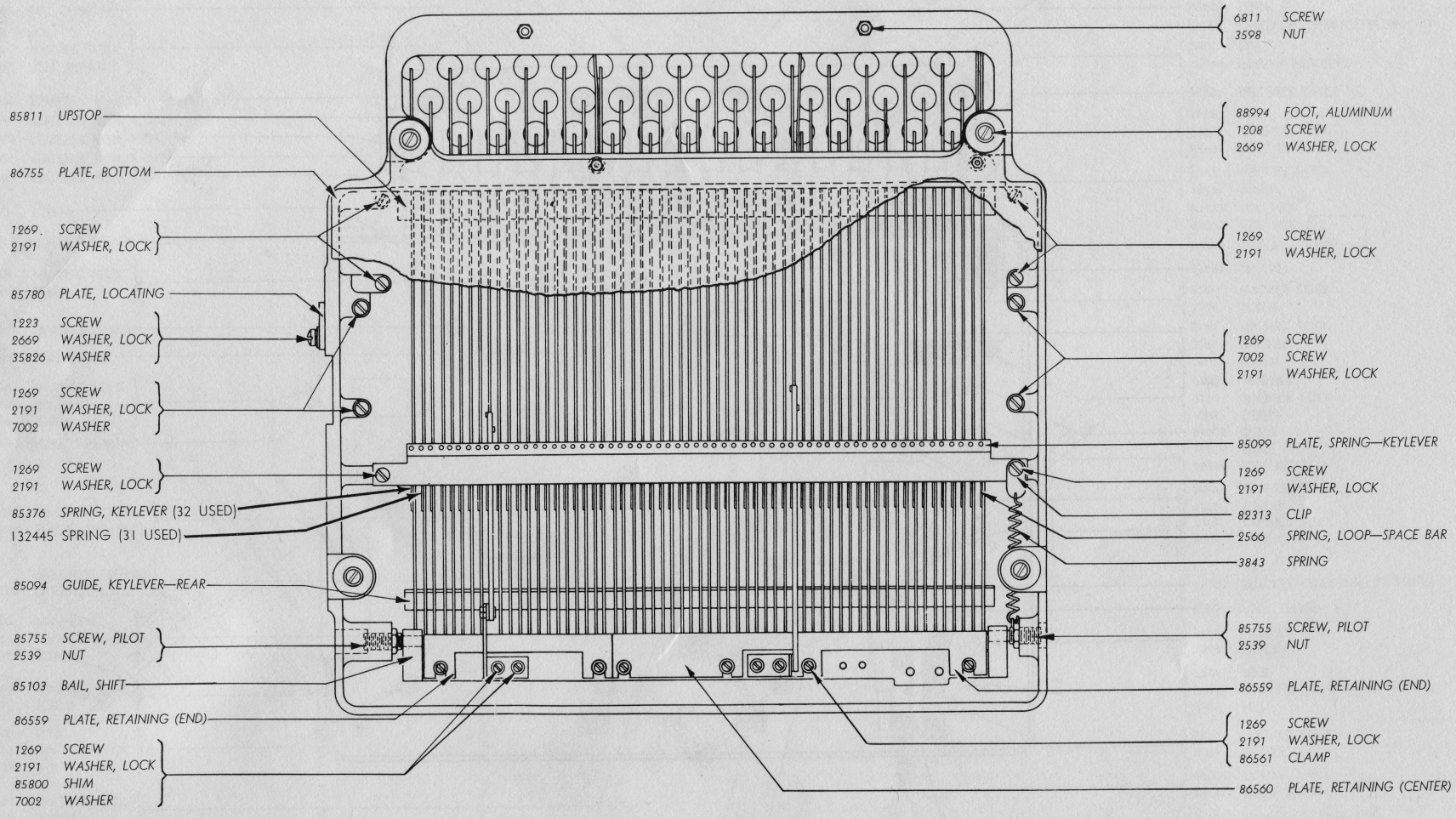
85811 UPSTOP
86755 PLATE, BOTTOM
1269 SCREW
2191 WASHER, LOCK
85780 PLATE, LOCATING
1223 SCREW
2669 WASHER, LOCK
35826 WASHER
1269 SCREW
2191 WASHER, LOCK
7002 WASHER
1269 SCREW
2191 WASHER, LOCK
85376 SPRING, KEYLEVER (32 USED)
132445 SPRING (31 USED)
85094 GUIDE, KEYLEVER—REAR
85755 SCREW, PILOT
2539 NUT
85103 BAIL, SHIFT
86559 PLATE, RETAINING (END)
1269 SCREW
2191 WASHER, LOCK
85800 SHIM
7002 WASHER
6811 SCREW
3598 NUT
88994 FOOT, ALUMINUM
1208 SCREW
2669 WASHER, LOCK
1269 SCREW
2191 WASHER, LOCK
1269 SCREW
7002 SCREW
2191 WASHER, LOCK
85099 PLATE, SPRING—KEYLEVER
1269 SCREW
2191 WASHER, LOCK
82313 CLIP
2566 SPRING, LOOP—SPACE BAR
3843 SPRING
85755 SCREW, PILOT
2539 NUT
86559 PLATE, RETAINING (END)
1269 SCREW
2191 WASHER, LOCK
86561 CLAMP
86560 PLATE, RETAINING (CENTER)

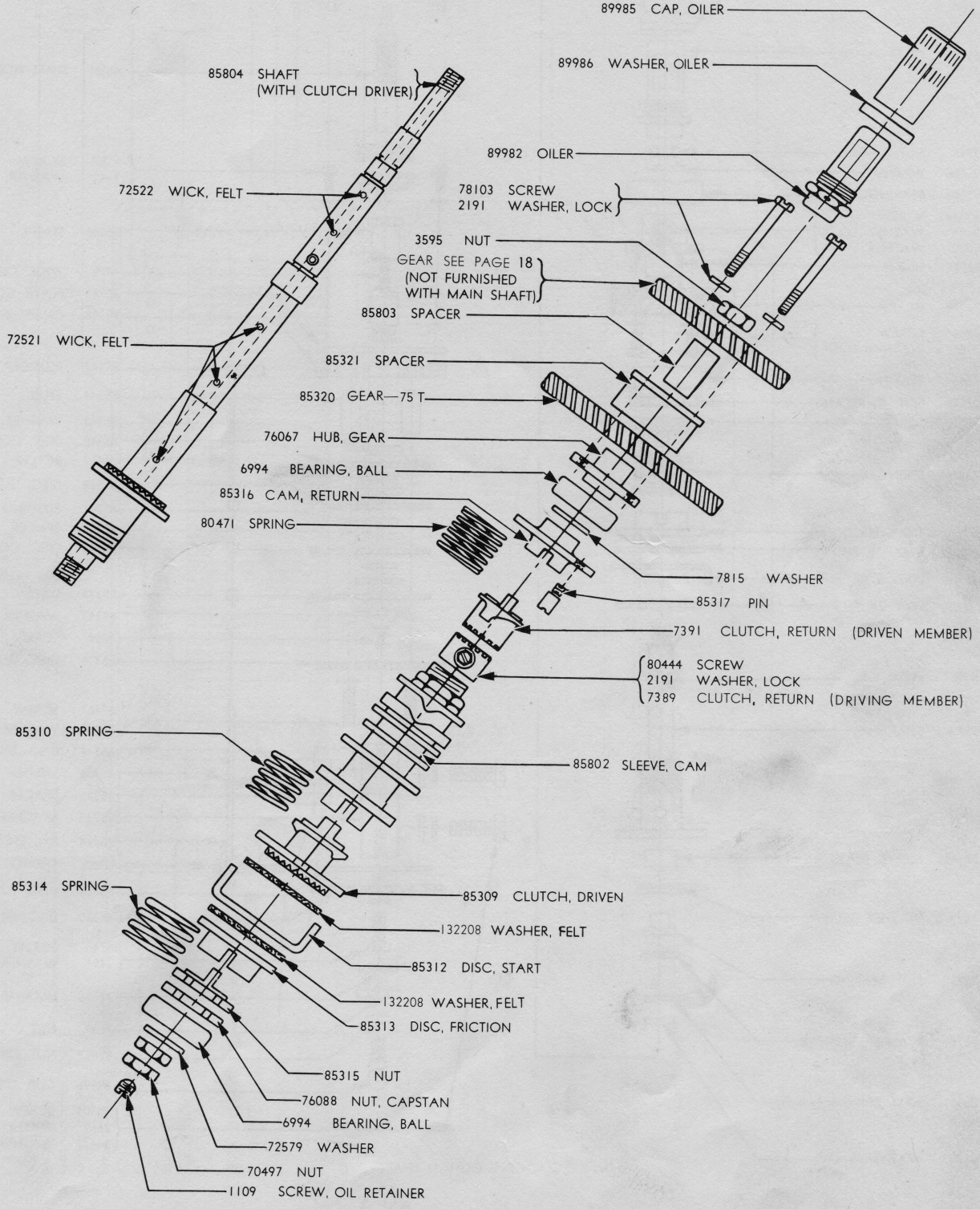
89985 CAP, OILER
89986 WASHER, OILER
85804 SHAFT (WITH CLUTCH DRIVER)
89982 OILER
72522 WICK, FELT
78103 SCREW
2191 WASHER, LOCK
3595 NUT
GEAR SEE PAGE 18 (NOT FURNISHED WITH MAIN SHAFT)
85803 SPACER
72521 WICK, FELT
85321 SPACER
85320 GEAR—75 T
76067 HUB, GEAR
6994 BEARING, BALL
85316 CAM, RETURN
80471 SPRING
7815 WASHER
85317 PIN
7391 CLUTCH, RETURN (DRIVEN MEMBER)
80444 SCREW
2191 WASHER, LOCK
7389 CLUTCH, RETURN (DRIVING MEMBER)
85310 SPRING
85802 SLEEVE, CAM
85314 SPRING
85309 CLUTCH, DRIVEN
132208 WASHER, FELT
85312 DISC, START
132208 WASHER, FELT
85313 DISC, FRICTION
85315 NUT
76088 NUT, CAPSTAN
6994 BEARING, BALL
72579 WASHER
70497 NUT
1109 SCREW, OIL RETAINER

CHANGE 2

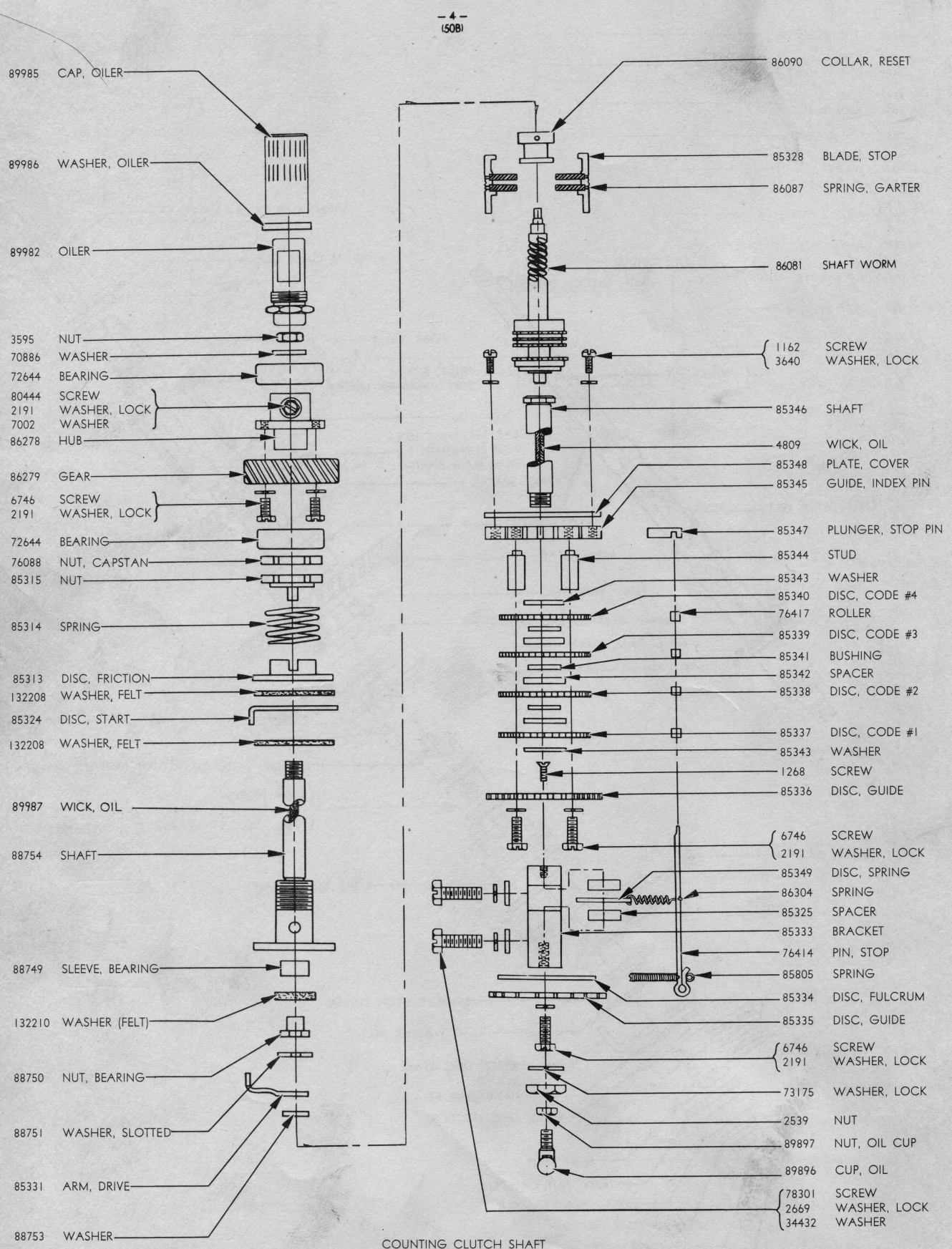

COUNTING CLUTCH SHAFT

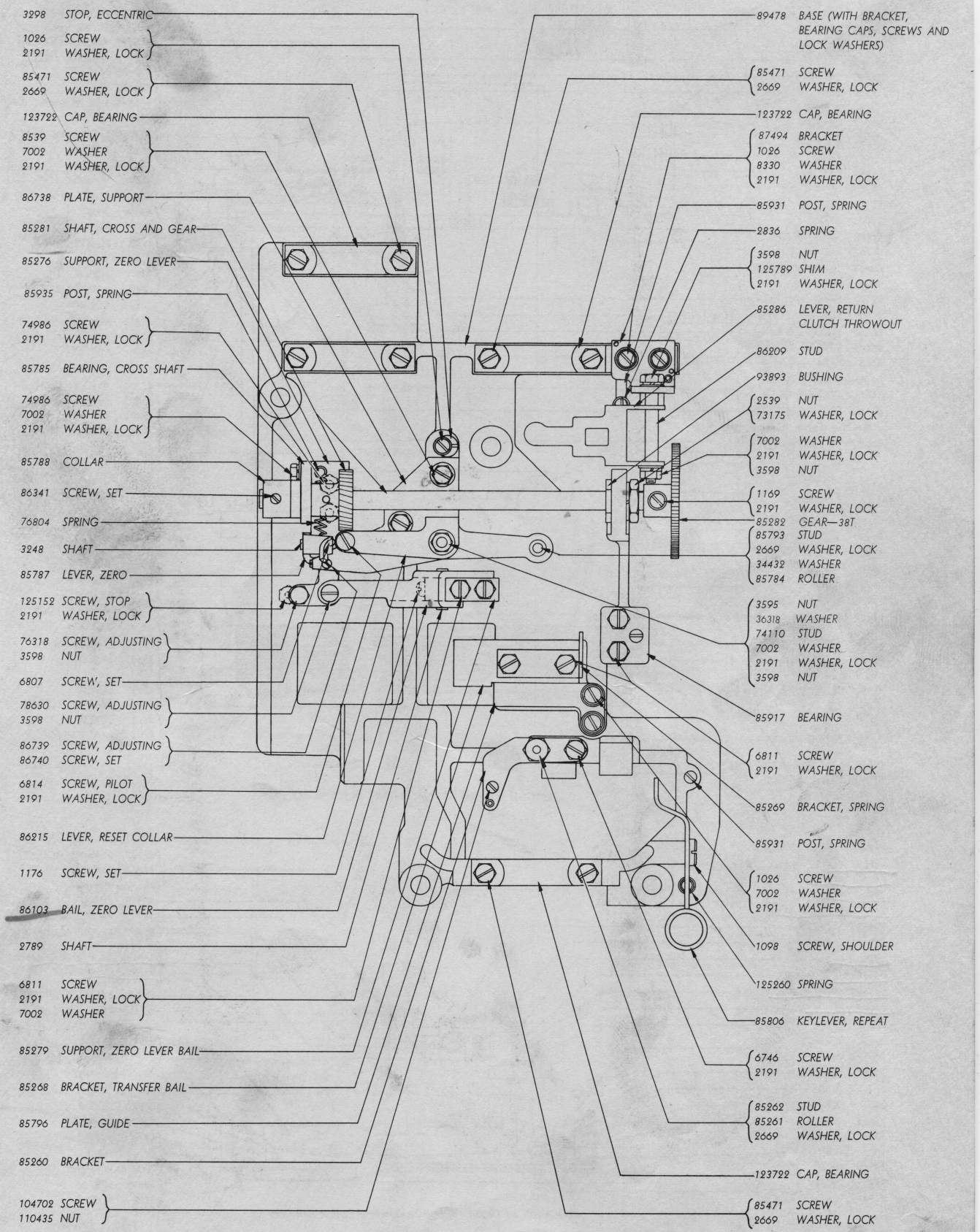
3298 STOP, ECCENTRIC
1026 SCREW
2191 WASHER, LOCK
85471 SCREW
2669 WASHER, LOCK
123722 CAP, BEARING
8539 SCREW
7002 WASHER
2191 WASHER, LOCK
86738 PLATE, SUPPORT
85281 SHAFT, CROSS AND GEAR
85276 SUPPORT, ZERO LEVER
85935 POST, SPRING
74986 SCREW
2191 WASHER, LOCK
85785 BEARING, CROSS SHAFT
74986 SCREW
7002 WASHER
2191 WASHER, LOCK
85788 COLLAR
86341 SCREW, SET
76804 SPRING
3248 SHAFT
85787 LEVER, ZERO
125152 SCREW, STOP
2191 WASHER, LOCK
76318 SCREW, ADJUSTING
3598 NUT
6807 SCREW, SET
78630 SCREW, ADJUSTING
3598 NUT
86739 SCREW, ADJUSTING
86740 SCREW, SET
6814 SCREW, PILOT
2191 WASHER, LOCK
86215 LEVER, RESET COLLAR
1176 SCREW, SET
86103 BAIL, ZERO LEVER
2789 SHAFT
6811 SCREW
2191 WASHER, LOCK
7002 WASHER
85279 SUPPORT, ZERO LEVER BAIL
85268 BRACKET, TRANSFER BAIL
85796 PLATE, GUIDE
85260 BRACKET
104702 SCREW
110435 NUT
89478 BASE (WITH BRACKET, BEARING CAPS, SCREWS AND LOCK WASHERS)
85471 SCREW
2669 WASHER, LOCK
123722 CAP, BEARING
87494 BRACKET
1026 SCREW
8330 WASHER
2191 WASHER, LOCK
85931 POST, SPRING
2836 SPRING
3598 NUT
125789 SHIM
2191 WASHER, LOCK
85286 LEVER, RETURN CLUTCH THROWOUT
86209 STUD
93893 BUSHING
2539 NUT
73175 WASHER, LOCK
7002 WASHER
2191 WASHER, LOCK
3598 NUT
1169 SCREW
2191 WASHER, LOCK
85282 GEAR—38T
85793 STUD
2669 WASHER, LOCK
34432 WASHER
85784 ROLLER
3595 NUT
36318 WASHER
74110 STUD
7002 WASHER
2191 WASHER, LOCK
3598 NUT
85917 BEARING
6811 SCREW
2191 WASHER, LOCK
85269 BRACKET, SPRING
85931 POST, SPRING
1026 SCREW
7002 WASHER
2191 WASHER, LOCK
1098 SCREW, SHOULDER
125260 SPRING
85806 KEYLEVER, REPEAT
6746 SCREW
2191 WASHER, LOCK
85262 STUD
85261 ROLLER
2669 WASHER, LOCK
123722 CAP, BEARING
85471 SCREW
2669 WASHER, LOCK

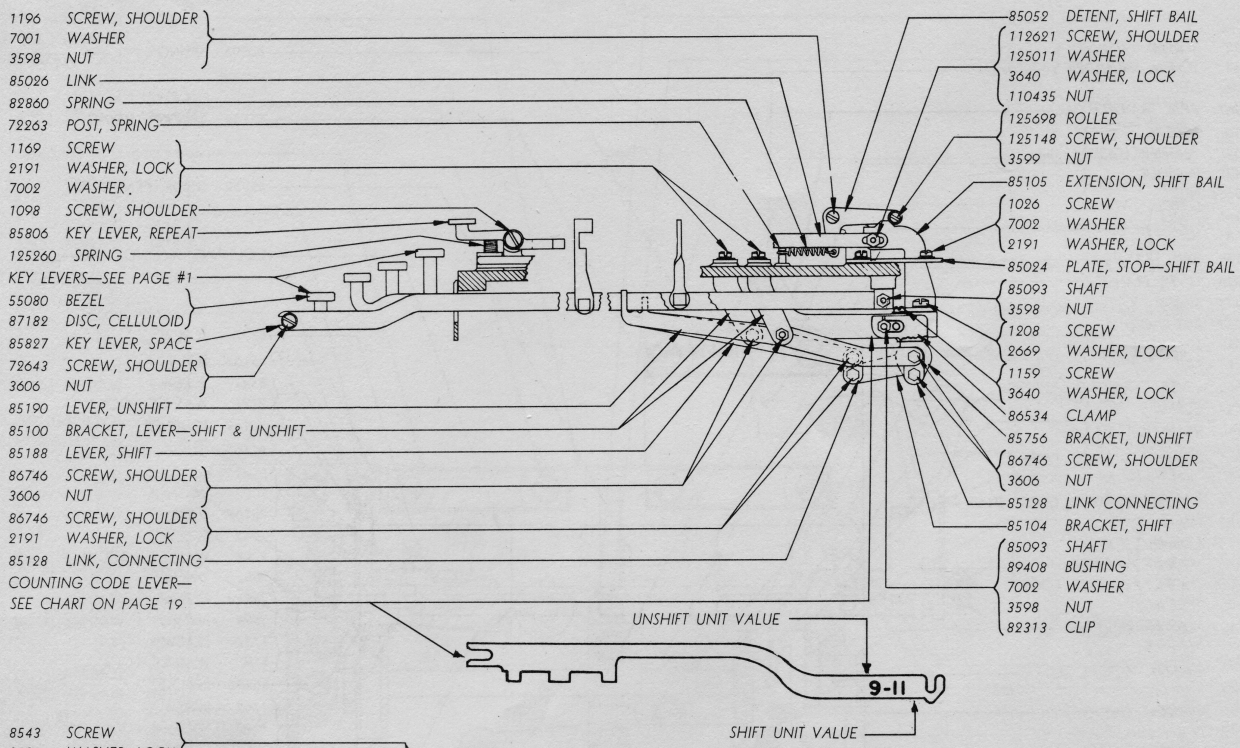

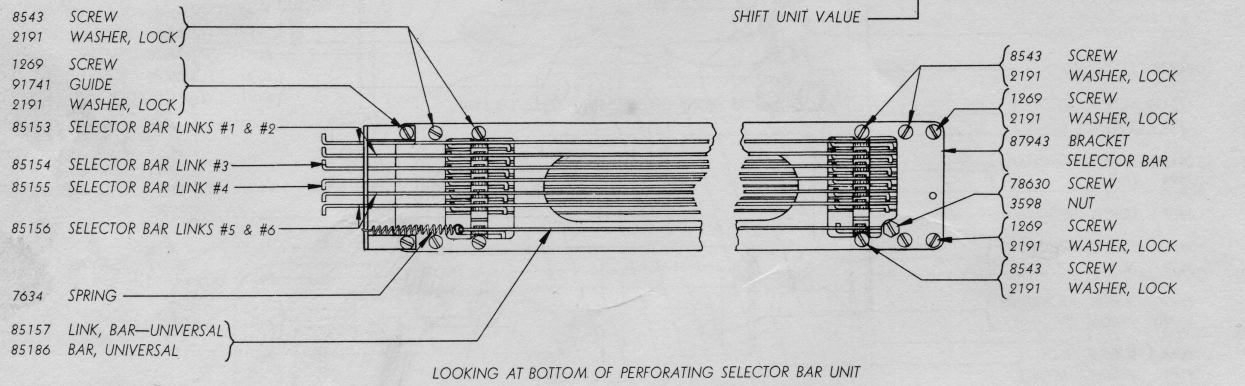

LOOKING AT BOTTOM OF PERFORATING SELECTOR BAR UNIT

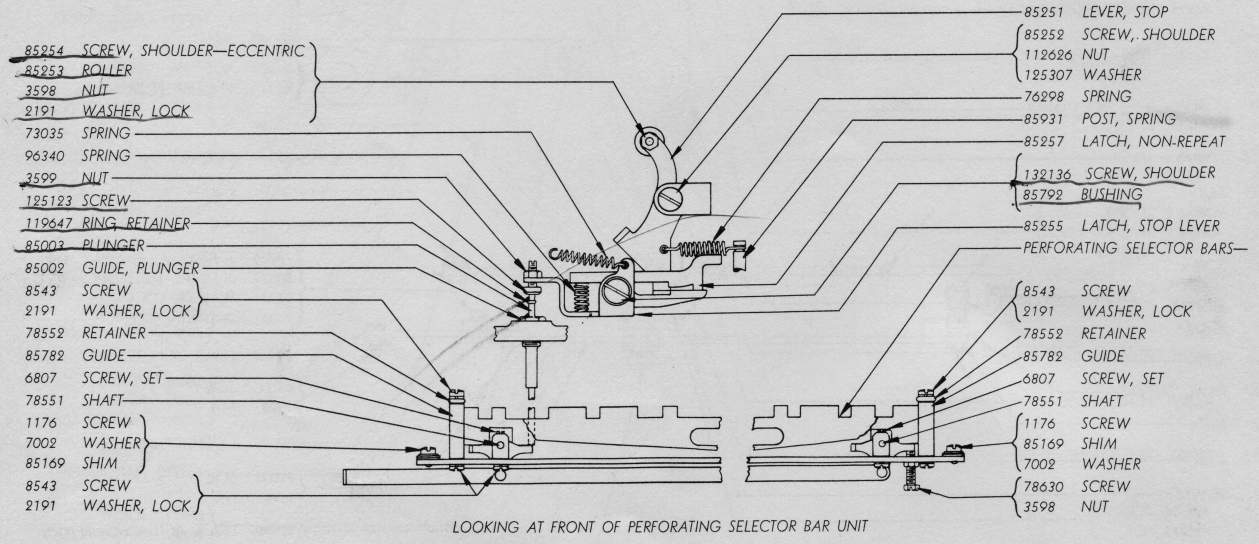

LOOKING AT FRONT OF PERFORATING SELECTOR BAR UNIT

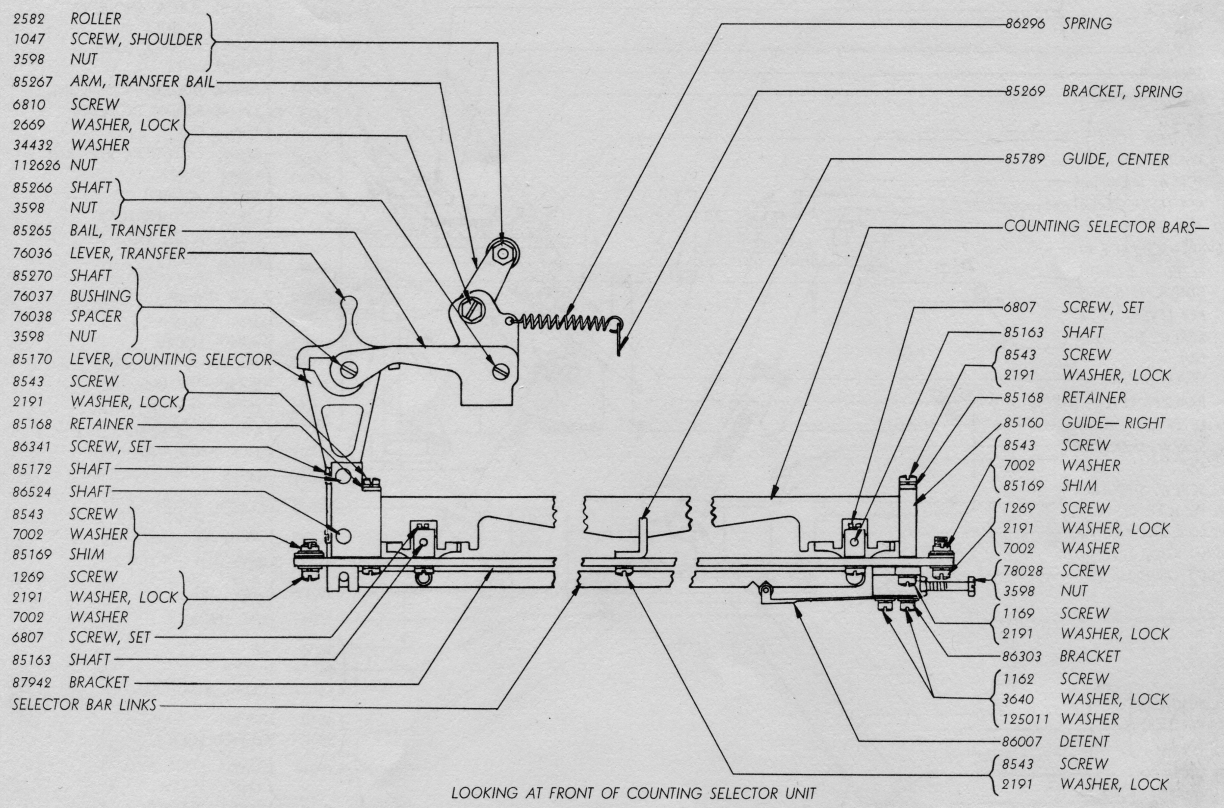

LOOKING AT FRONT OF COUNTING SELECTOR UNIT

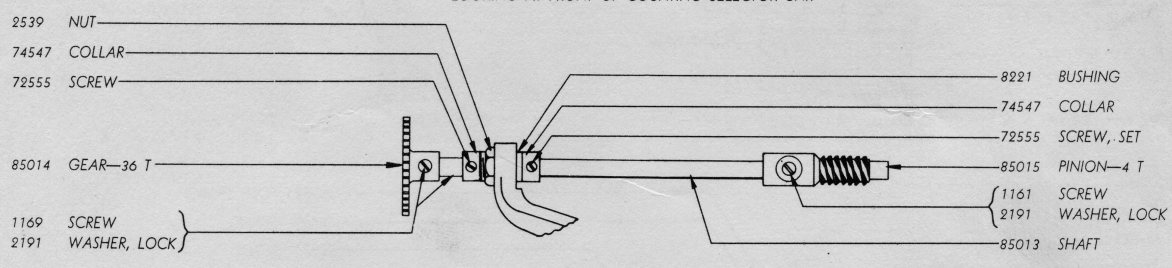

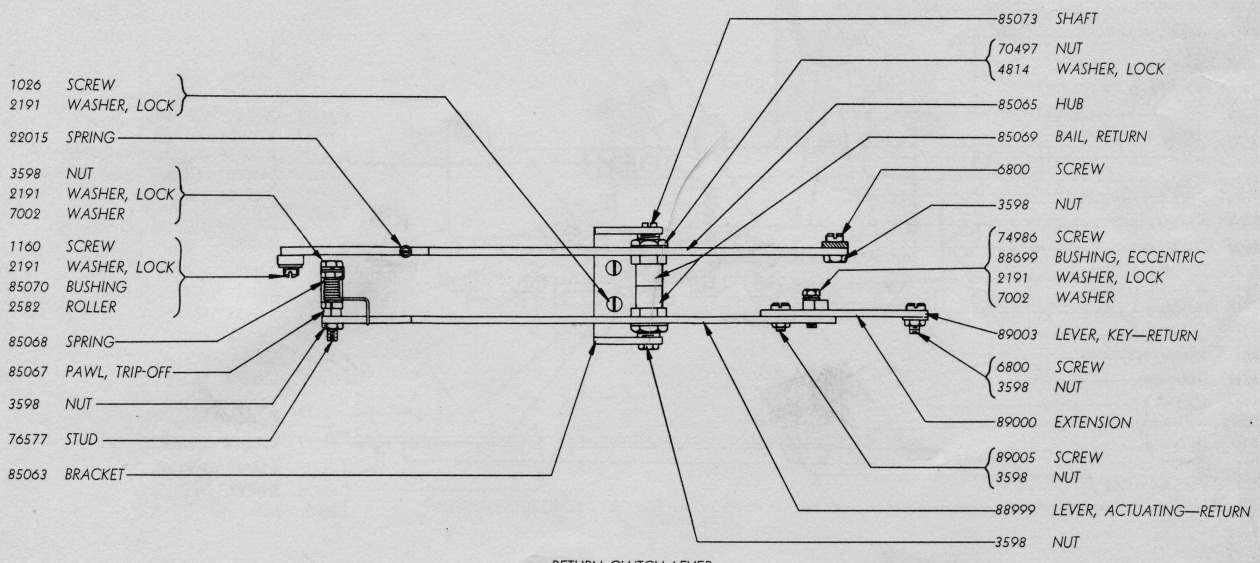

RETURN CLUTCH LEVER

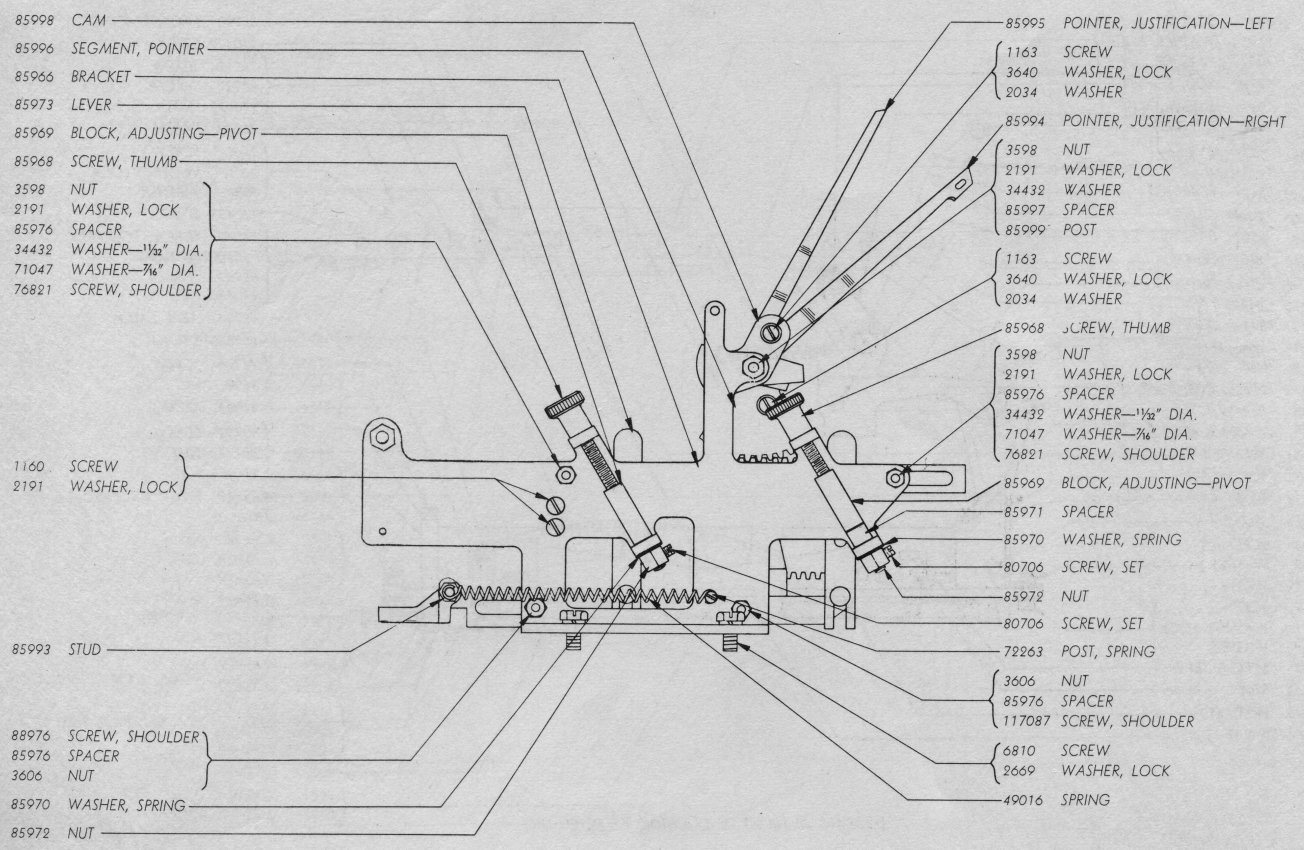

FRONT VIEW

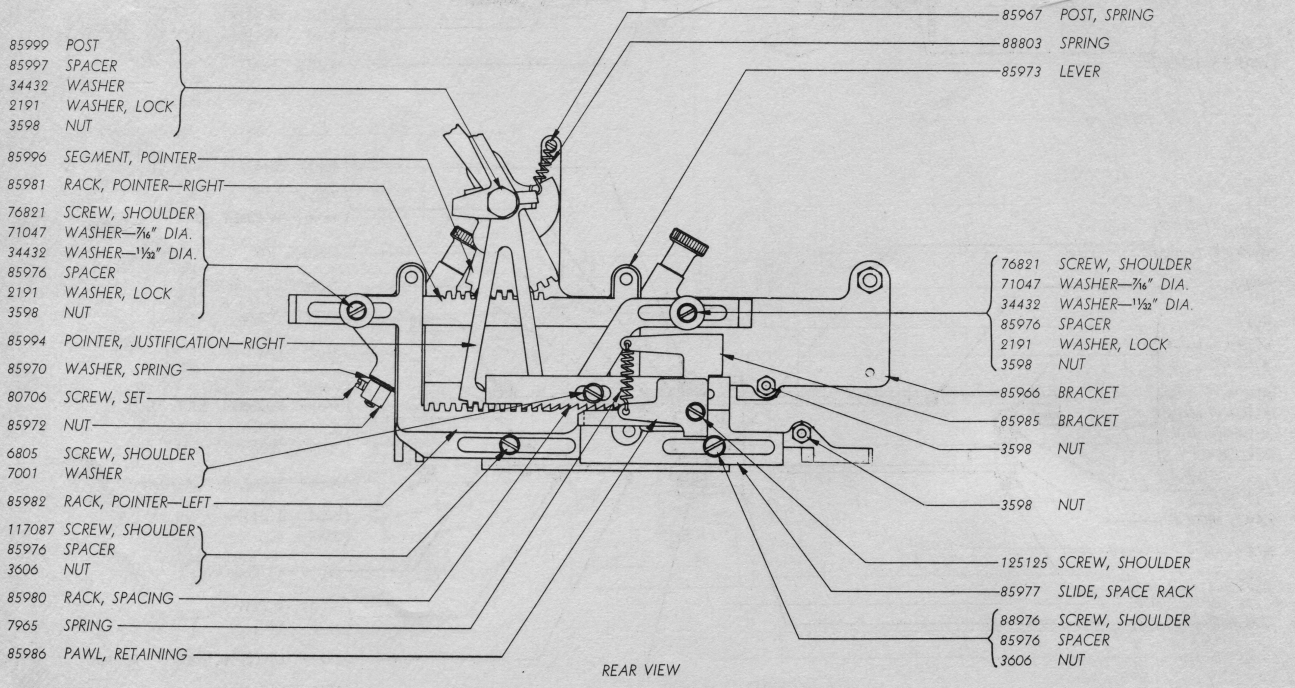

REAR VIEW

CHANGE 1

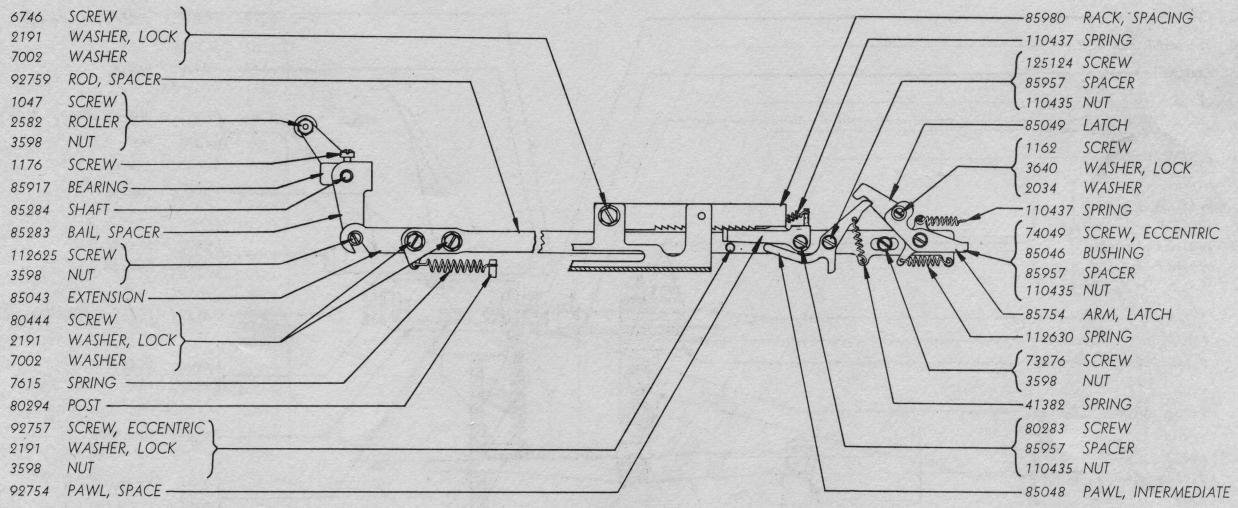

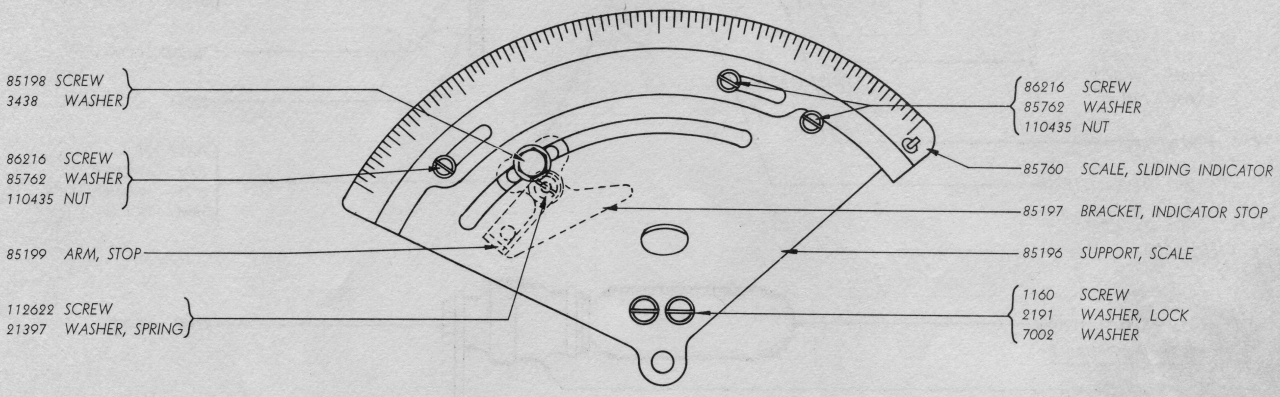

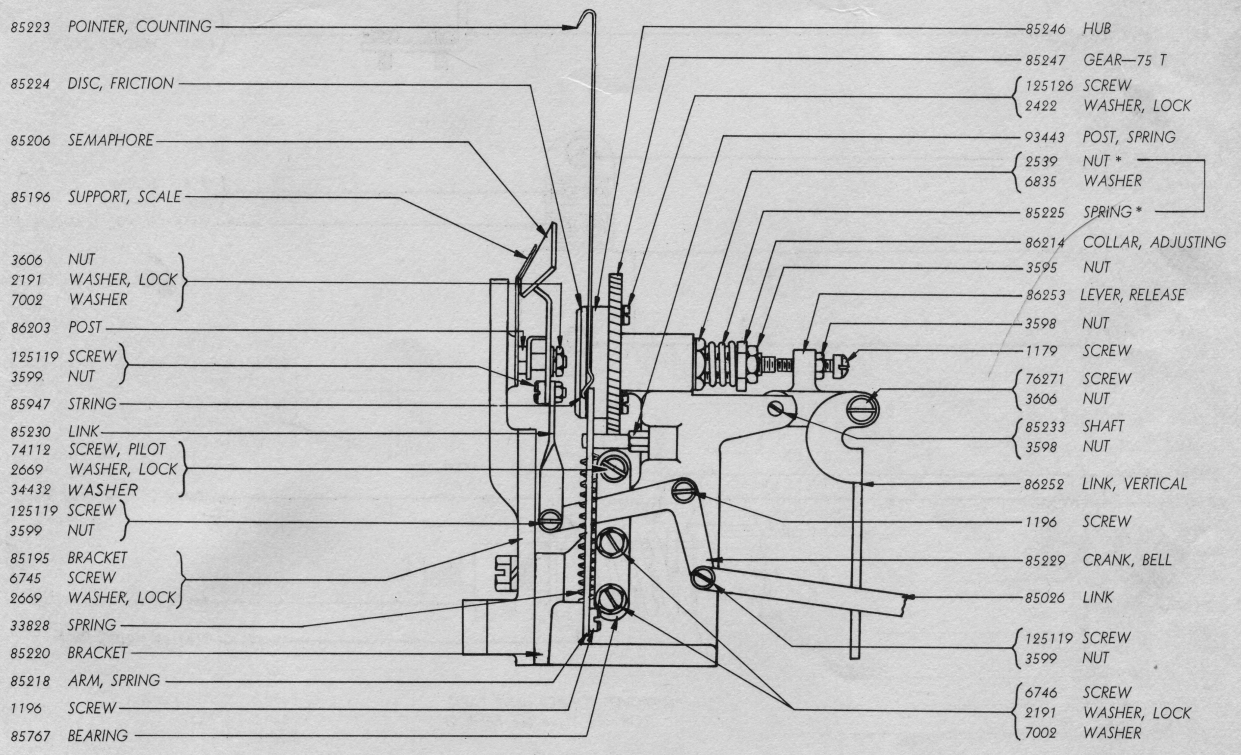

*FOR NEW STYLE SEE IMPROVED POINTER DRIVE ON PAGE 10.

ORIGINAL

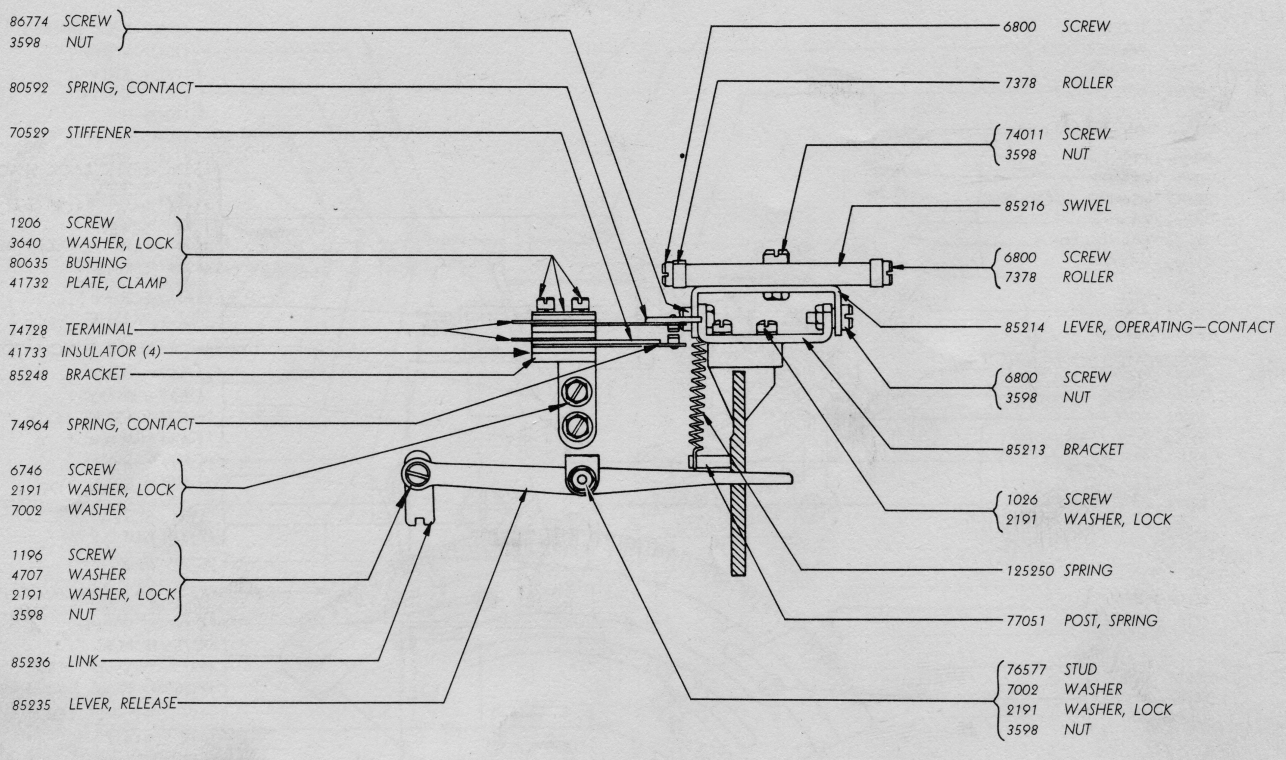

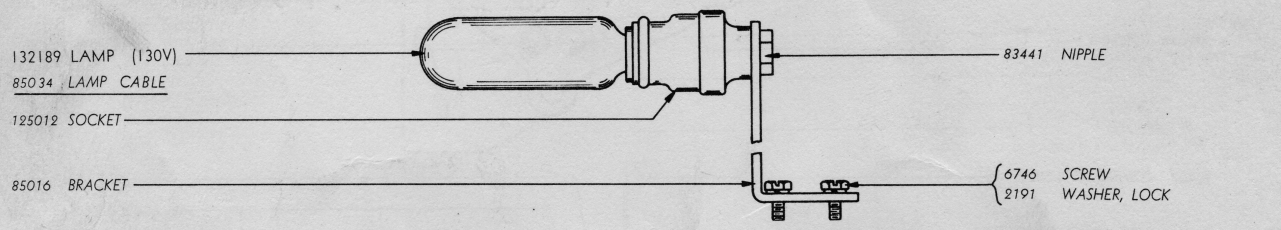

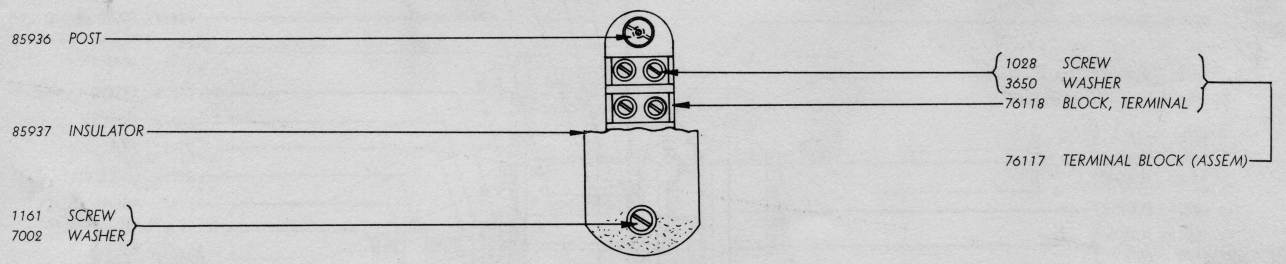

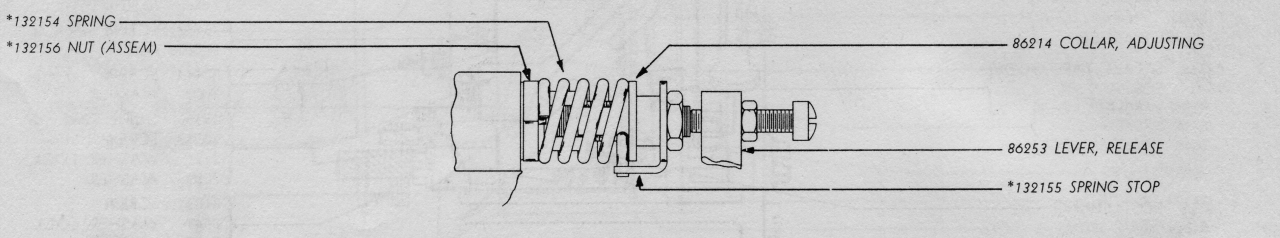

*IMPROVED POINTER DRIVE PARTS
(FOR OLD STYLE SEE PAGE 9)

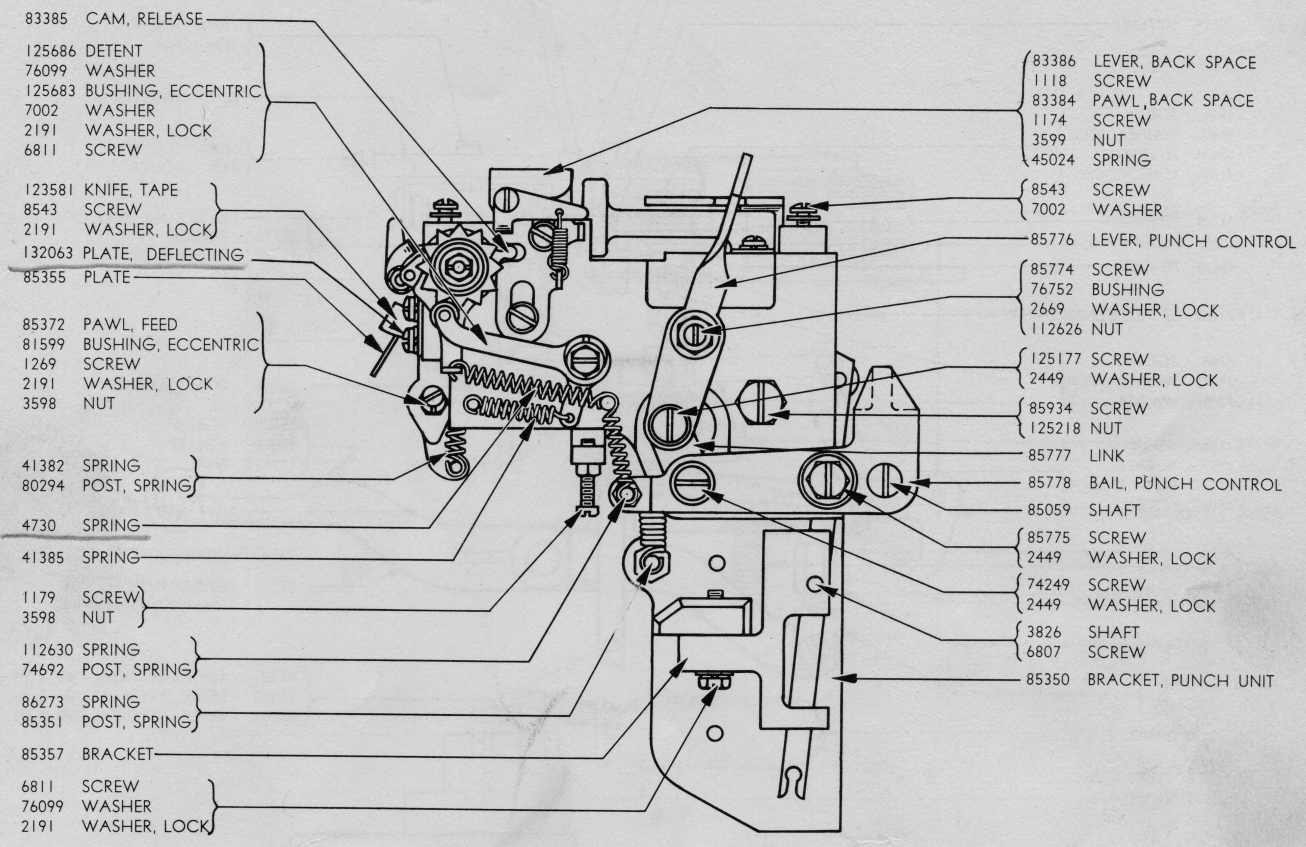
83385 CAM, RELEASE
125686 DETENT
76099 WASHER
125683 BUSHING, ECCENTRIC
7002 WASHER
2191 WASHER, LOCK
6811 SCREW
123581 KNIFE, TAPE
8543 SCREW
2191 WASHER, LOCK
132063 PLATE, DEFLECTING
85355 PLATE
85372 PAWL, FEED
81599 BUSHING, ECCENTRIC
1269 SCREW
2191 WASHER, LOCK
3598 NUT
41382 SPRING
80294 POST, SPRING
4730 SPRING
41385 SPRING
1179 SCREW
3598 NUT
112630 SPRING
74692 POST, SPRING
86273 SPRING
85351 POST, SPRING
85357 BRACKET
6811 SCREW
76099 WASHER
2191 WASHER, LOCK
83386 LEVER, BACK SPACE
1118 SCREW
83384 PAWL, BACK SPACE
1174 SCREW
3599 NUT
45024 SPRING
8543 SCREW
7002 WASHER
85776 LEVER, PUNCH CONTROL
85774 SCREW
76752 BUSHING
2669 WASHER, LOCK
112626 NUT
125177 SCREW
2449 WASHER, LOCK
85934 SCREW
125218 NUT
85777 LINK
85778 BAIL, PUNCH CONTROL
85059 SHAFT
85775 SCREW
2449 WASHER, LOCK
74249 SCREW
2449 WASHER, LOCK
3826 SHAFT
6807 SCREW
85350 BRACKET, PUNCH UNIT

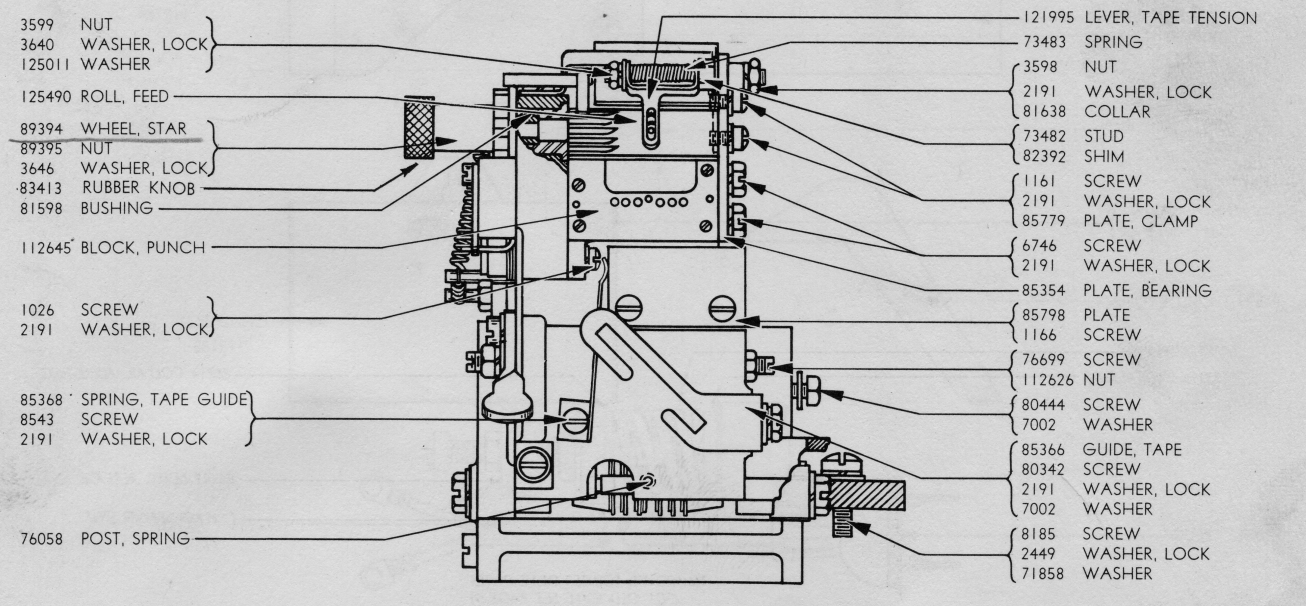
3599 NUT
3640 WASHER, LOCK
125011 WASHER
125490 ROLL, FEED
89394 WHEEL, STAR
89395 NUT
3646 WASHER, LOCK
83413 RUBBER KNOB
81598 BUSHING
112645 BLOCK, PUNCH
1026 SCREW
2191 WASHER, LOCK
85368 SPRING, TAPE GUIDE
8543 SCREW
2191 WASHER, LOCK
76058 POST, SPRING
121995 LEVER, TAPE TENSION
73483 SPRING
3598 NUT
2191 WASHER, LOCK
81638 COLLAR
73482 STUD
82392 SHIM
1161 SCREW
2191 WASHER, LOCK
85779 PLATE, CLAMP
6746 SCREW
2191 WASHER, LOCK
85354 PLATE, BEARING
85798 PLATE
1166 SCREW
76699 SCREW
112626 NUT
80444 SCREW
7002 WASHER
85366 GUIDE, TAPE
80342 SCREW
2191 WASHER, LOCK
7002 WASHER
8185 SCREW
2449 WASHER, LOCK
71858 WASHER

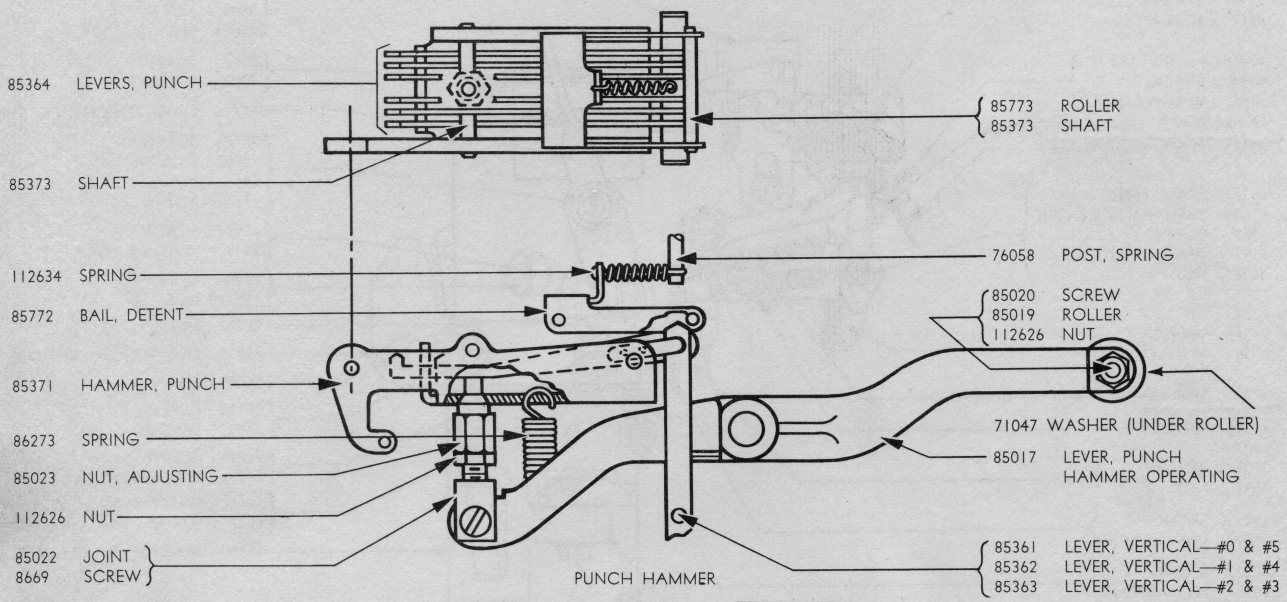

PUNCH HAMMER

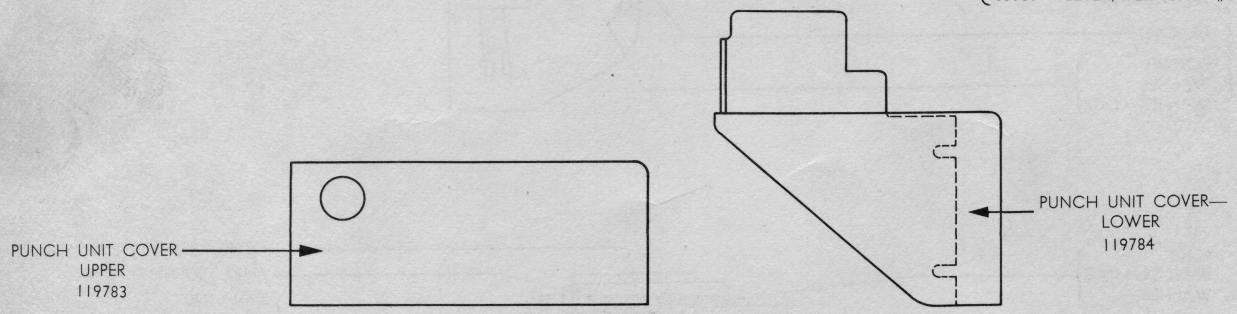

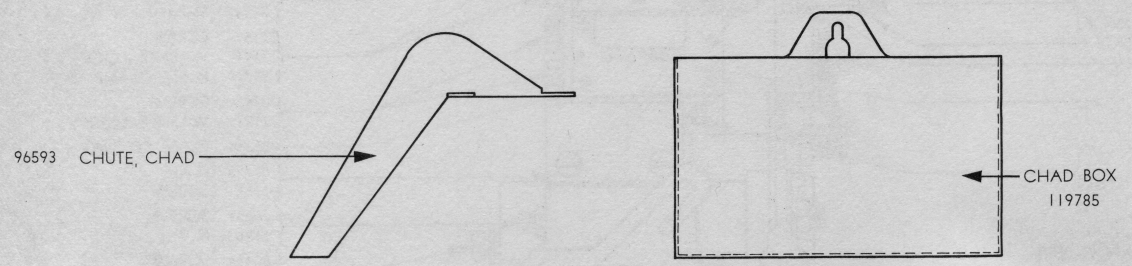

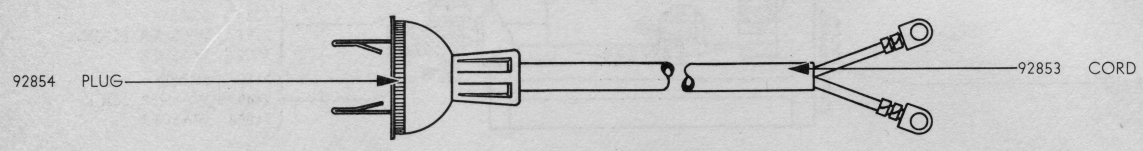

91115 MOTOR CABLE (ASSEM.)

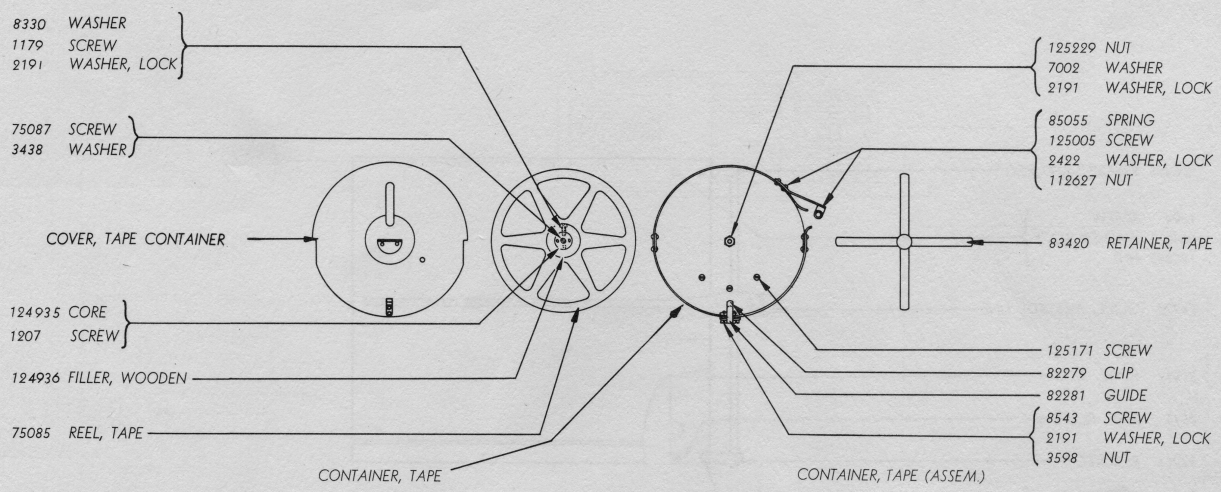

REPLACEMENT PARTS FOR OLD
STYLE TAPE CONTAINERS

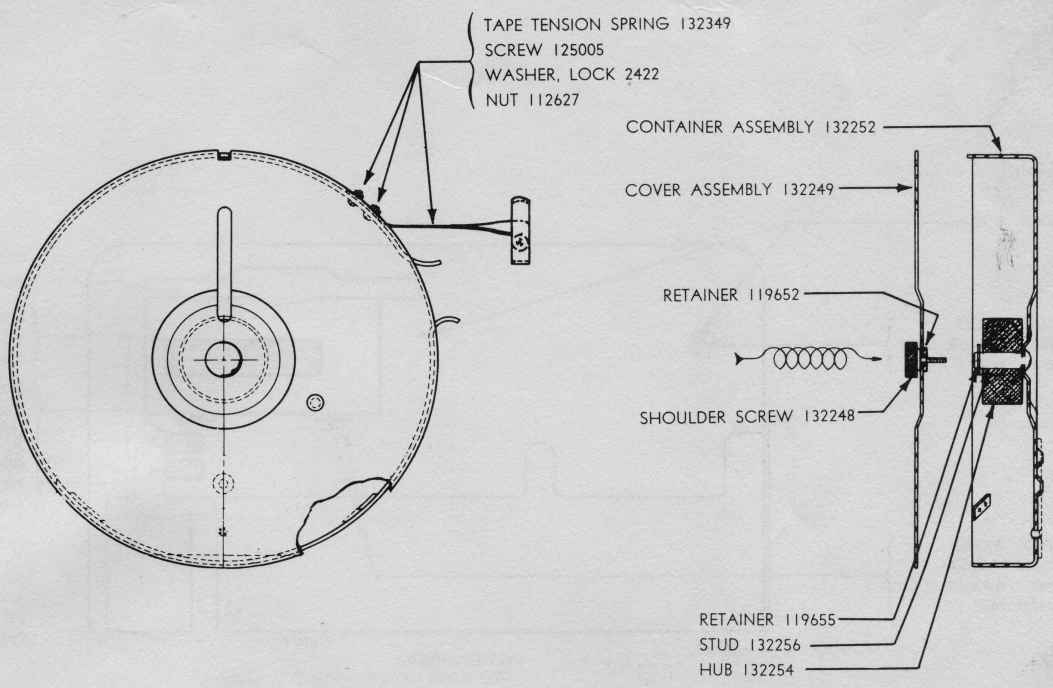

NEW STYLE TAPE CONTAINER

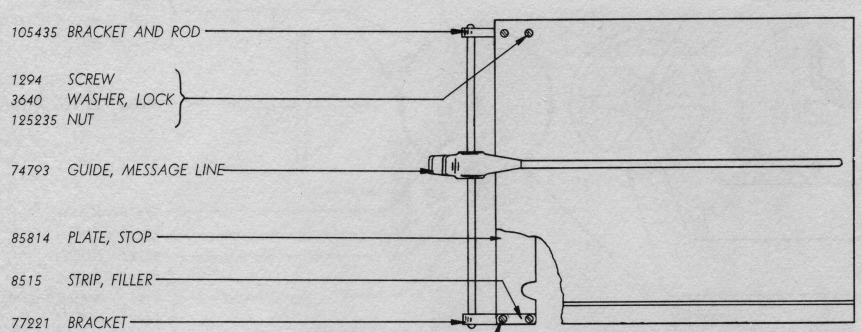

COPYHOLDER (ASSEM.)
115733AD—BROWN WRINKLE

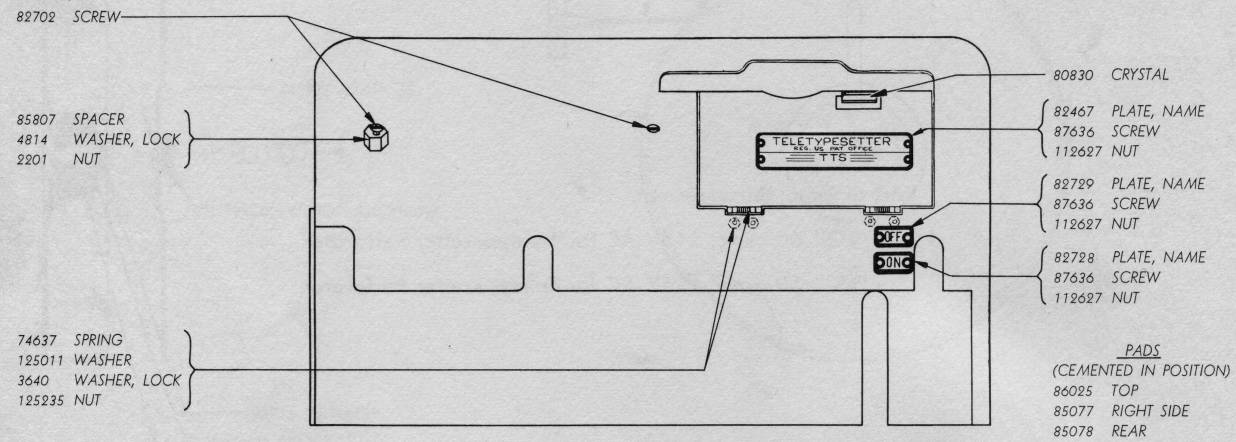

COVER (ASSEM.)
TPEC 200AD—BROWN WRINKLE

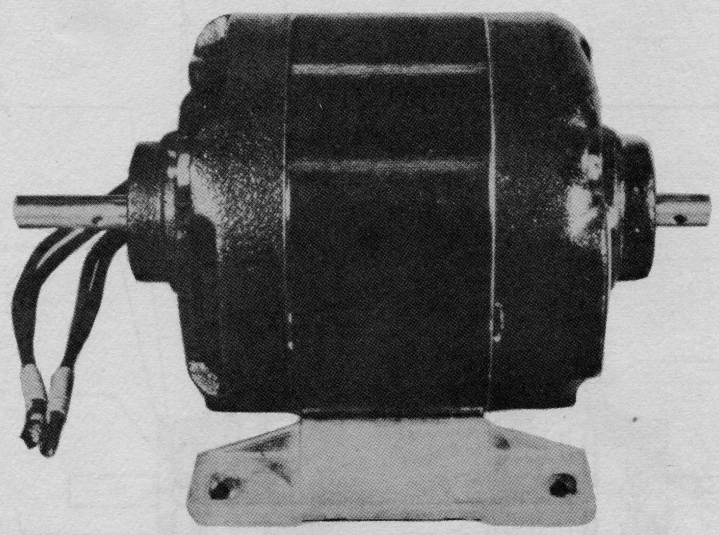

132124 Induction Motor, 1/20 H.P. 115V-AC, 50-60 Cycle (G.E. Model 5KH23AC322B)

For motor repair contact General Electric authorized small motor service stations as listed in the classified telephone directory. (Designate G.E. Model 5KH23AC322B).

Part of Motor Arrangement:

"LG" 60 cycle, 115V-AC for Teletypesetter Perforator

"LK" 50 cycle, 115V-AC for Teletypesetter Perforator

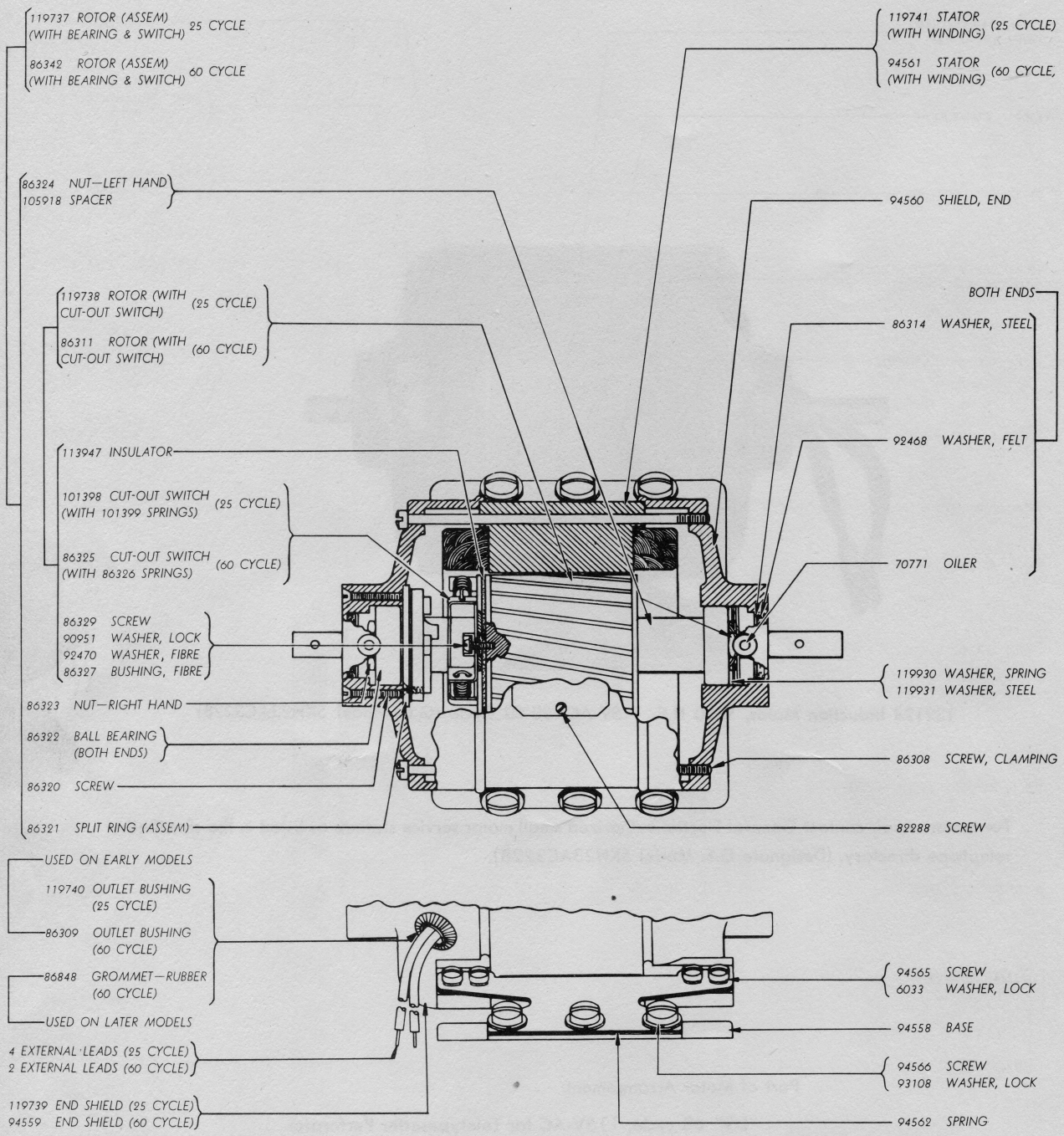

114321 SYNCHRONOUS MOTOR, 1/40 H.P. 115V., 25 CYCLE A.C. (H.C. MODEL S-9060)
114321 PART OF ARRANGEMENT "HZ"

92575 SYNCHRONOUS MOTOR, 1/40 H.P. 115V., 60 CYCLE A.C. (H.C. MODEL S-9017)
92575 PART OF ARRANGEMENT "BL"

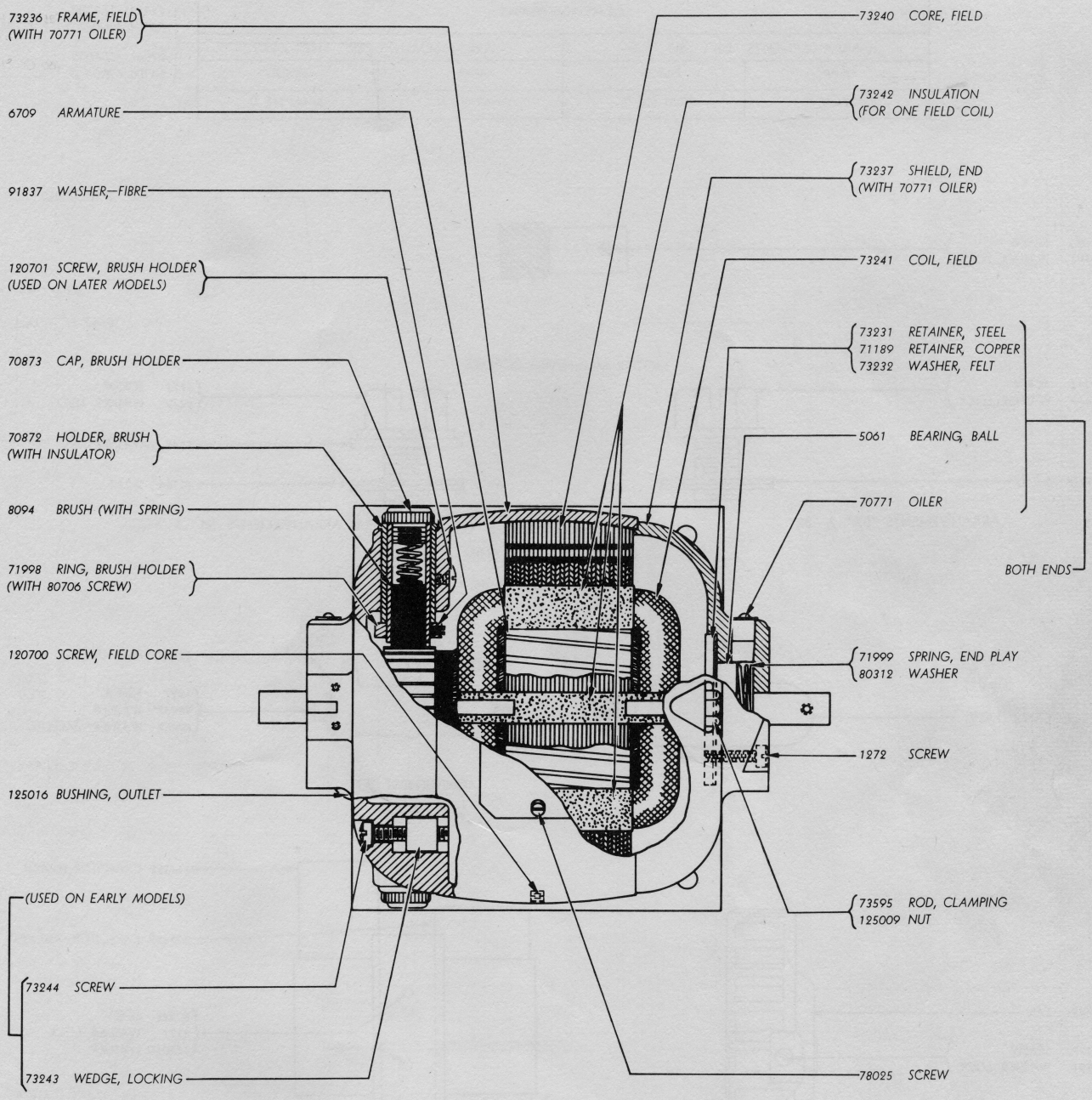

85958 SHUNT MOTOR, 1/20 H.P., 110V., D.C. (G.E. MODEL 28479 OR 5BY30A6)
PART OF ARRANGEMENT "BG"

GEARS AND PINIONS			
ARRANGEMENTS "BG", "BL", "LG"		ARRANGEMENTS "BR", "HZ", "LK"	
GEAR	PINION	GEAR	PINION
85322 (48 T)	85051 (12 T)	89462 (40 T)	89463 (12 T)

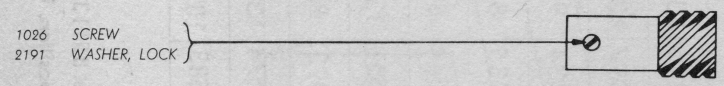

MOTOR MOUNTING SCREWS

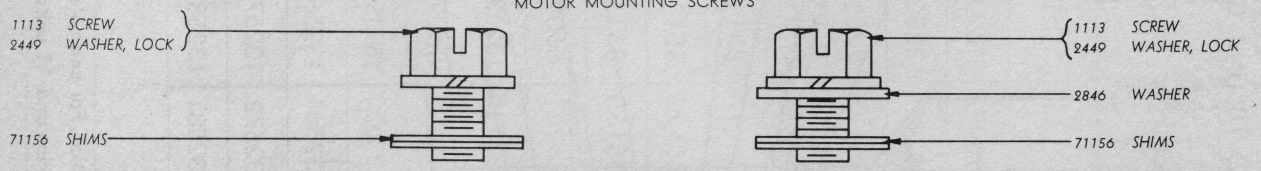

ARRANGEMENTS "BG" & "BR"

MOTOR ARRANGEMENTS "LG" & "LK" USE 90490 SHIM INSTEAD OF 71156.

ARRANGEMENTS "BL" & "HZ"

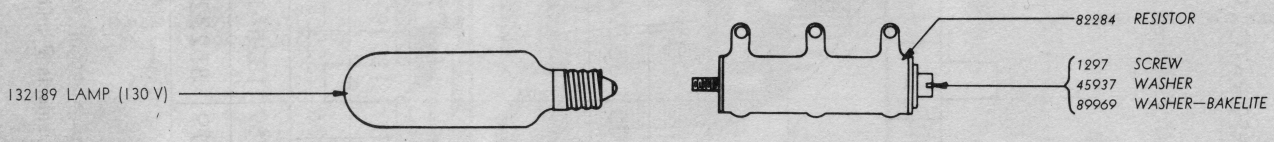

ARRANGEMENT "BG"

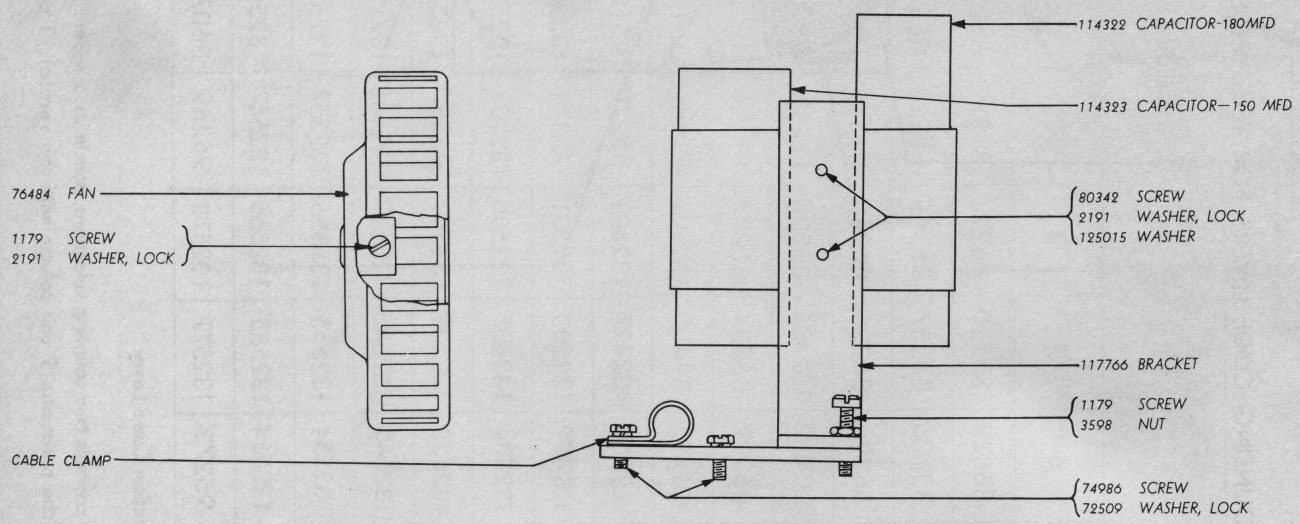

ARRANGEMENT "HZ"

PARTS SHOWN ON THIS PAGE ARE PART OF MOTOR ARRANGEMENTS "BG", "BL", "BR", AND "HZ" UNLESS OTHERWISE SPECIFIED

COUNTING CODE LEVERS FOR TELETYPESETTER PERFORATORS WITH 5 TO 18 UNIT COUNTING RANGE

Unit Value Selected and Counted in Shift Position

Un-shift	5	6	7	8	9	10	11	12	13	14	15	16	17	18
5	86219	86028	86220	86221	86029	86222	96587	86030	132476	86072	132477	132478	132479	86091
6	132480	85106	86237	85119	86223	86224	86225	86242	85121	132481	122824	132482	132483	85115
7	132484	86290	86226	86292	86240	86227	85118	86235	85120	85125	122825	132485	132486	95013
8	132487	132488	132489	86094	86291	86228	86229	86230	86239	86244	86245	132490	132491	86295
9	86101	86092	86234	86233	85107	86293	85113	85111	85126	85117	85124	86243	132492	85109
10	89431	132493	89432	132494	91682	86100	96588	86247	85123	85122	85116	86246	132495	89433
11	132496	95268	132497	132498	95270	95123	89900	86294	86236	85110	85114	86097	122826	132204
12	132205	132499	132500	132501	95271	132502	123311	123312	123313	86231	86095	89434	96586	122828
13	132503	132504	132505	132506	132203	132507	132199	132194	132192	132536	132537	89435	86098	86102
14	132191	132538	132539	132540	96585	132541	132542	132195	132543	132193	86099	132544	89436	86238
15	132198	132545	132546	132547	132548	132190	132200	132197	132549	132550	132196	132551	132552	85112
16	132553	132554	132555	132556	132557	132558	132206	132559	132560	132561	132562	86093	86241	122827
17	132563	132564	132565	132566	132567	132568	132569	132570	132571	132572	132573	132574	132575	86096
18	132576	95272	132577	132578	95269	86071	132579	86232	132580	132581	132582	132583	132584	85108

85127 Function Code Lever

NOTE: Each lever controls two counting selections, one in its unshifted position and a second in its shifted position. For example, part No. 85113, listed at the intersection of the horizontal 9 unit column with the vertical 11 unit column, selects 9 units in unshift position and 11 units in shift position. This part is stamped "9-11".

CHANGE 1

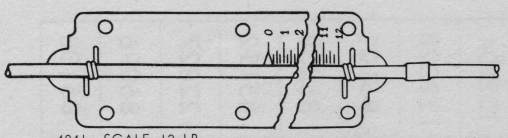

4841 SCALE, 12 LB.
82711 SCALE, 64 OZ.

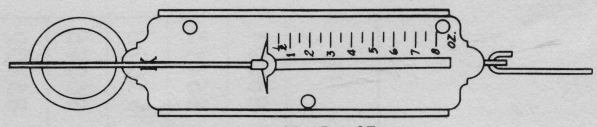

110443 SCALE, 8 OZ.

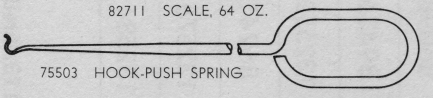

75503 HOOK-PUSH SPRING

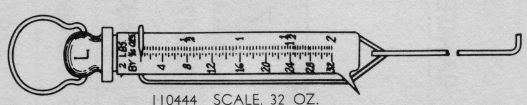

110444 SCALE, 32 OZ.

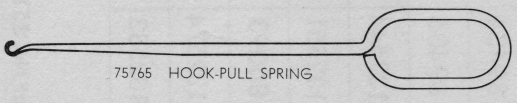

75765 HOOK-PULL SPRING

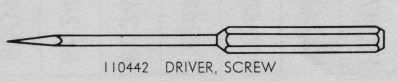

110442 DRIVER, SCREW

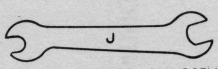

125763 3/16"–1/4" WRENCH, OPEN

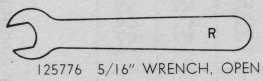

125776 5/16" WRENCH, OPEN

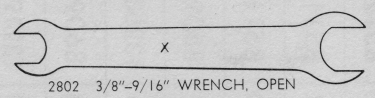

2802 3/8"–9/16" WRENCH, OPEN

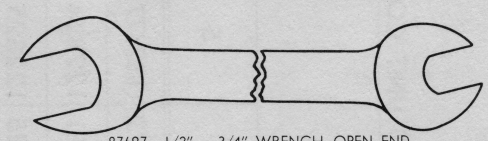

87697 1/2" — 3/4" WRENCH, OPEN END

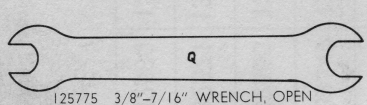

125775 3/8"–7/16" WRENCH, OPEN

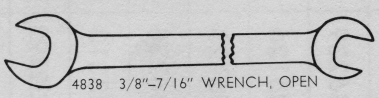

4838 3/8"–7/16" WRENCH, OPEN

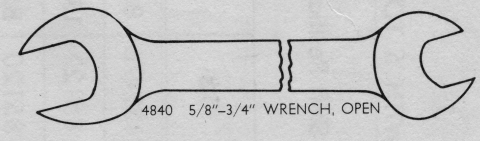

4840 5/8"–3/4" WRENCH, OPEN

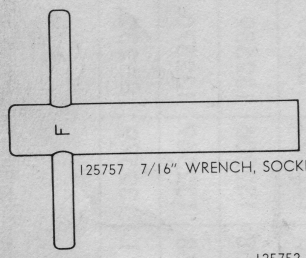

125757 7/16" WRENCH, SOCKET

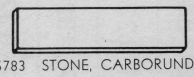

125783 STONE, CARBORUNDUM

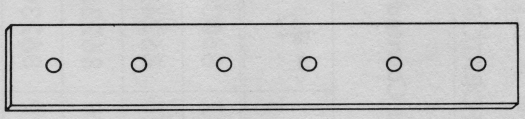

2215 GAUGE, TAPE

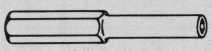

125752 3/16" WRENCH, SCREW DRIVER SOCKET

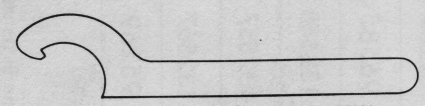

86340 WRENCH, CAPSTAN

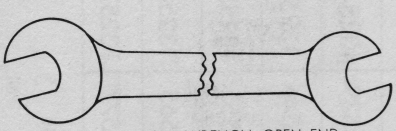

4839 1/2" — 7/16" WRENCH, OPEN END

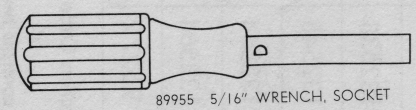

89955 5/16" WRENCH, SOCKET

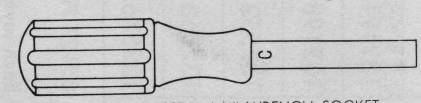

89954 1/4" WRENCH, SOCKET

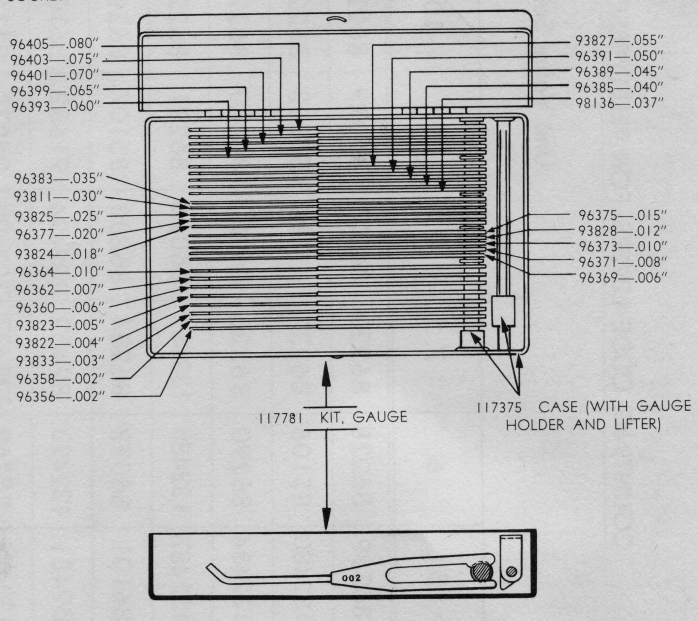

NUMERICAL INDEX

PART NUMBER	DESCRIPTION	PAGE
1026	Screw (6-40 Shoulder)	1-5-6-7-10-11
1028	Screw (6-40 Brass)	10
1047	Screw (6-40 Shoulder)	7-9
1098	Screw (6-40 Shoulder)	5-6
1109	Screw (10-32 x 7/32 Set)	3
1113	Screw (¼-20 x ⅞)	18
1118	Screw (6-40 Shoulder)	11
1121	Screw (1-32 x ⅜)	1
1159	Screw (4-40 x ⅜)	6
1160	Screw (6-40 x ¼)	7-8-9
1161	Screw (6-40 x ¼)	7-10-11
1162	Screw (4-40 x ¼)	4-7-9
1163	Screw (4-40 x 3/16)	8
1166	Screw (4-36 x ¼)	11
1169	Screw (6-40 x 7/16)	1-5-6-7
1174	Screw (4-40 Shoulder)	11
1176	Screw (6-40 x 3/16)	5-7
1179	Screw (6-40 x ⅝)	5-6-9-13
1196	Screw (6-40 Shoulder)	6-8-9-10
1206	Screw (4-40 x 9/16)	10
1207	Screw (4-36 x 5/16)	13
1208	Screw (10-32 x 5/16)	1-2-6
1223	Screw (10-32 x ½)	1-2
1268	Screw (6-40 x 5/16)	4
1269	Screw (6-40 x ½)	1-2-6-7-11
1272	Screw (6-40 x 11/16)	17
1294	Screw (4-36 x ½)	14
1297	Screw (6-40 x 2-7/16)	18
2034	Washer	8-9
2191	Washer, Lock	1 to 18
2201	Nut (5/16-32 Hex.)	14
2215	Gauge, Tape	20
2263	Nut (8-32 Hex.)	8
2322	Washer, Lock	1
2422	Washer, Lock	9-13
2449	Washer, Lock	11-18
2539	Nut (⅜-32 Hex.)	2-4-5-7
2566	Spring (1 Used)	2
2582	Roller	7-9
2669	Washer, Lock	1 to 18
2789	Shaft	5
2802	⅜"-9/16" Wrench, Open	20
2836	Spring	5
2846	Washer	18
3248	Shaft	5
3298	Stop, Eccentric	5
3438	Washer	9-13
3595	Nut (¼-32 Hex.)	3-4-5-9
3598	Nut (6-40 Hex.)	1 to 18
3599	Nut (4-40 Hex.)	6-9-11
3606	Nut (6-40 Hex.)	1-6-8-9
3640	Washer, Lock	4 to 18
3646	Washer, Lock	8-11
3650	Washer, Brass	10
3826	Shaft	11
3843	Spring	2
4707	Washer	10
4730	Spring	11
4809	Wick, Oil	4
4814	Washer, Lock	7-14
4838	⅜"-7/16" Wrench, Open	20
4839	½"-7/16" Wrench, Open	20
4840	⅝"-¾" Wrench, Open	20
4841	Scale, 12 lb.	20
5061	Bearing, Ball	17
6033	Washer, Lock	16
6709	Armature	17
6745	Screw (10-32 x ½)	9
6746	Screw (6-40 x 5/16)	1-4-5-9-10-11
6800	Screw (6-40 Shoulder)	7-10
6805	Screw (6-40 Shoulder)	8
6807	Screw (6-40 x 3/16)	5-6-7-11
6810	Screw (10-32 x ⅜)	7-8
6811	Screw (6-40 x ⅝)	2-5-11
6814	Screw (6-40 Pilot)	5
6835	Washer	9
6994	Bearing, Ball	3
7001	Washer	6-8
7002	Washer	1 to 13
7334	Post	1
7378	Roller	10
7389	Clutch, Return (Driving Member)	3
7391	Clutch, Return (Driving Member)	3
7615	Spring	9
7634	Spring	6
7815	Washer	3
7965	Spring	8
8094	Brush (with Spring)	17
8185	Screw (¼-20 x ¾)	11
8221	Bushing	7
8330	Washer	5-14
8515	Strip, Filler	14
8539	Screw (6-40 x ½)	5
8543	Screw (6-40 x ¼)	1-6-7-11-13
8669	Screw (6-40 Shoulder)	12
21397	Spring	9
22015	Spring	7
33828	Spring	9
34432	Washer	4-5-7-8-9
35826	Washer	1-2
36318	Washer	5
41382	Spring	9-11
41385	Spring	11
41732	Plate, Clamp	10
41733	Insulator	10
45024	Spring	11
45937	Washer	18
49016	Spring	8
55080	Bezel	6
70497	Nut (5/16-32)	3-7
70529	Stiffener	10
70771	Oiler	15-17
70872	Holder, Brush (with Insulator)	17
70873	Cap, Brush Holder	17
70886	Washer	4
71047	Washer	8-12
71156	Shim	18
71189	Retainer, Copper	17
71858	Washer	11
71998	Ring, Brush Holder (with 80706 Screw)	17
71999	Spring, End Play	17
72263	Post, spring	1-6-8
72509	Washer, Lock	18
72555	Screw (6-40 x 9/64)	7

NUMERICAL INDEX

PART NUMBER	DESCRIPTION	PAGE
72579	Washer	3
72643	Screw (6-40 Shoulder)	1-6
72644	Bearing	4
73035	Spring	6
73175	Washer, Lock	4-5
73180	Switch, Toggle (Assy.)	1
73231	Retainer, Steel	17
73232	Washer, Felt	17
73236	Frame, Field (with 70771 Oiler)	17
73237	Shield, End (with 70771 Oiler)	17
73240	Core, Field	17
73241	Coil, Field	17
73242	Insulation (for One Field Coil)	17
73243	Wedge, Locking	17
73244	Screw (10-32 x 7/8)	17
73276	Screw (6-40 Shoulder)	9
73482	Stud	11
73483	Spring	11
73595	Rod, Clamping	17
74011	Screw (6-04 Shoulder)	10
74049	Screw (4-40 Shoulder)	9
74110	Stud	5
74112	Screw (10-32 Pilot)	9
74249	Screw (1/4-32 Pilot)	11
74547	Collar	7
74637	Spring	14
74692	Post, Spring	11
74728	Terminal	10
74738	Screw (10-32 Shoulder)	1
74793	Guide, Message Line	14
74964	Spring, contact	10
74986	Screw (6-40 x 13/32)	5-7-18
75085	Reel, Tape	13
75087	Screw (6-32 Shoulder)	13
75503	Hook-Push Spring	20
75765	Hook-Pull Spring	20
76036	Lever, "T" Transfer	7
76037	Bushing	7
76038	Spacer	7
76058	Post, Spring	11
76067	Hub, Gear	3
76088	Nut (9/16-32 Capstan)	3-4
76099	Washer	11
76117	Block, Terminal (Assy.)	10
76118	Block, terminal	10
76271	Screw (6-40 Shoulder)	9
76298	Spring	6
76318	Screw (6-40 x 3/8)	5
76414	Pin, Stop	4
76417	Roller	4
76484	Fan	18
76577	Stud	7-10
76699	Screw (10-32 Pilot)	11
76752	Bushing	11
76804	Spring	5
76821	Screw (6-40 Shoulder)	8
77051	Post, spring	10
77221	Bracket	14
78025	Screw (4-48 x 3/16)	17
78028	Screw (6-40 x 15/16)	7
78075	Screw (6-40 Pilot)	1
78103	Screw (6-40 x 1-3/16)	3
78301	Screw (10-32 x 5/8)	4
78551	Shaft	6
78552	Retainer	6
78630	Screw (6-40 x 1/2)	5-6
80283	Screw (4-40 Shoulder)	9
80294	Post, Spring	1-9-11
80312	Washer	17
80342	Screw (6-40 x 23/64)	11-18
80444	Screw (6-40 x 1/4)	3-4-9-11
80471	Spring	3
80592	Spring, contact	10
80635	Bushing	10
80706	Screw, set (6-40 x 3/16)	8
80830	Crystal, Red	14
81598	Bushing	11
81599	Bushing, Eccentric	11
81638	Collar	11
82279	Clip, Short	13
82281	Clip, Long	13
82284	Resistor (70 (50-20) ohms)	18
82288	Screw (4-49 x 1/4)	16
82313	Clip	2-6
82392	Shim	11
82467	Plate, name	14
82702	Screw (6-40 x 9/32)	14
82711	Scale, 64 oz.	20
82728	Plate, Name	14
82729	Plate, Name	14
82860	Spring	6
83384	Pawl, Back Space	11
83385	Cam, Release	11
83386	Lever, Back Space	11
83413	Knob, Rubber	11
83420	Retainer, Tape	13
83441	Nipple	10
85002	Guide, Plunger	1-6
85003	Plunger	6
85013	Shaft	7
85014	Gear, 36T	7
85015	Pinion, 4T	7
85016	Bracket	10
85017	Lever, Punch Hammer Operating	12
85019	Roller	12
85020	Screw (10-32 Shoulder)	12
85022	Joint	12
85023	Nut (10-32 Adjusting)	12
85024	Stop plate, shift bail	1-6
85026	Link	6-9
85031	Bracket	1
85034	Cable, lamp	10
85035	Cable, switch	1
85043	Extension	9
85046	Bushing	9
85048	Pawl	9
85049	Latch	9
85051	Pinion (12-T)	18
85052	Detent, shift bail	6
85055	Spring, tape tension	13
85058	Container, tape	13
85059	Shaft	11
85063	Bracket	7
85065	Hub	7

NUMERICAL INDEX

PART NUMBER	DESCRIPTION	PAGE
85067	Pawl, Trip-off	7
85068	Spring	7
85069	Bail, return	7
85070	Bushing	7
85073	Shaft	7
85077	Pad, right side	14
85078	Pad, rear	14
85082	Keylever—row 4	1
85083	Keylever—row 3	1
85084	Keylever—row 1	1
85085	Keylever—row 2	1
85090	Keylever, function	1
85093	Shaft	6
85094	Guide, keylever-rear	2
85095	Guide, keylever-front	1
85098	Bar, Space	1
85099	Plate, spring-keylever	2
85100	Bracket, lever shift and unshift	1-6
85103	Bail, shift	2
85104	Bracket, shift	6
85105	Extension, shift bail	6
85106 to 85127	Lever, Counting Code	19
85128	Link, connection	6
85141	Link, counting selector bar (A)	7
85144	Link, counting selector bar (B)	7
85146	Link, counting selector bar (C)	7
85148	Link, counting selector bar (D)	7
85153	Selector bar link #1 and #2	6
85154	Selector bar link #3	6
85155	Selector bar link #4	6
85157	Link bar-universal	6
85160	Guide, right	7
85163	Shaft	7
85164	Bar, counting selector (CA-1)	7
85165	Bar, counting selector (CB-1)	7
85166	Bar, counting selector (CC-1)	7
85167	Bar, counting selector (CD-1)	7
85168	Retainer	7
85169	Shim	6-7
85170	Lever, counting selector	7
85172	Shaft	7
85174	Bar, perforating selector (A-2)	6
85175	Bar, perforating selector (A-1)	6
85176	Bar, perforating selector (B2)	6
85177	Bar, perforating selector (B1)	6
85180	Bar, perforating selector (D-2)	6
85181	Bar, perforating selector (D-1)	6
85184	Bar, perforating selector (F-2)	6
85185	Bar, perforating selector (F-1)	6
85186	Bar, perforating selector (UB)	6
85188	Lever, shift	6
85190	Lever, unshift	6
85195	Bracket	9
85196	Support, scale	9
85197	Bracket	9
85198	Screw (10-32 x 3/16)	9
85199	Arm, stop	9
85206	Semaphore	9
85213	Bracket	10
85214	Lever, operating	10
85216	Swivel	10
85218	Arm, spring	9

PART NUMBER	DESCRIPTION	PAGE
85220	Bracket	9
85223	Pointer, counting	9
85224	Rod, Release	9
85225	Spring	9
85229	Crank, bell	9
85230	Link	9
85233	Shaft	9
85235	Lever, release	10
85236	Link	10
85246	Hub	9
85247	Gear, 75T	9
85248	Bracket	10
85251	Lever, Stop	6
85252	Screw (10-32 Shoulder)	6
85253	Roller	6
85254	Screw (6-40 Shoulder)	6
85255	Latch, Stop Lever	6
85257	Latch, Non-Repeat	6
85260	Bracket	5
85261	Roller	5
85262	Stud	5
85265	Bail, Transfer	7
85266	Shaft	7
85267	Arm, Transfer Bail	7
85268	Bracket, Transfer Bail	5
85269	Bracket, Spring	5-7
85270	Shaft	7
85276	Support, Zero Lever	5
85279	Support, Zero Lever Bail	5
85281	Shaft, cross and gear	5
85282	Gear, 38T	5
85283	Bail, spacer	9
85284	Shaft	9
85286	Lever, Return Clutch Throw-Out	5
85309	Clutch, Driven	3
85310	Spring	3
85312	Disc, Start	3
85313	Disc, Friction	3-4
85314	Spring	3-4
85315	Nut (Special)	3-4
85316	Cam, Return	3
85317	Pin	3
85320	Gear (75-T)	3
85321	Spacer	3
85322	Gear (48-T)	18
85324	Disc, Start	4
85325	Spacer	4
85328	Blade, Stop	4
85331	Arm, Drive	4
85333	Bracket	4
85334	Disc, Fulcrum	4
85335	Disc, Guide	4
85336	Disc, Guide	4
85337	Disc, Code #1	4
85338	Disc, Code #2	4
85339	Disc, Code #3	4
85340	Disc, Code #4	4
85341	Bushing	4-7
85342	Spacer	4
85343	Washer	4
85344	Stud	4
85345	Guide, Index Pin	4

NUMERICAL INDEX

PART NUMBER	DESCRIPTION	PAGE
85346	Shaft	4
85347	Plunger, Stop Pin	4
85348	Plate, Cover	4
85349	Disc, Spring	4
85350	Bracket, Punch Unit	11
85351	Post, Spring	11
85354	Plate, Bearing	11
85355	Plate	11
85357	Bracket	11
85361	Lever, Vertical #0 & #5	12
85362	Lever, Vertical #1 & #4	12
85363	Lever, Vertical #2 & #3	12
85364	Lever, Punch	12
85366	Guide, Tape	11
85368	Spring, Tape Guide	11
85371	Hammer, Punch	12
85372	Pawl, Feed	11
85373	Shaft	12
85376	Spring	2
85471	Screw (10-32 x ½)	5
85754	Arm, Latch	9
85755	Screw (⅜-32 Pilot)	2
85756	Bracket, unshift	6
85760	Scale	9
87762	Washer	9
85767	Bearing	9
85772	Bail, Detent	12
85773	Roller	12
85774	Screw (10-32 Pilot)	11
85775	Screw (10-32 Pilot)	11
85776	Lever, Punch Control	11
85777	Link	11
85778	Bail, Punch Control	11
85779	Plate, Clamp	11
85780	Plate, Locating	1-2
85782	Guide	6
85784	Roller	5
85785	Bearing, Cross Shaft	5
85787	Lever, Zero	5
85788	Collar	5
85789	Guide, center	7
85792	Bushing	6
85793	Stud	5
85796	Plate, guide	5
85798	Plate	11
85800	Shim	2
85802	Sleeve, Cam	3
85803	Spacer	3
85804	Shaft (with Clutch Driver)	3
85805	Spring	4
85806	Lever, Repeat Key	5-6
85807	Spacer	14
85811	Upstop	2
85814	Plate, Stop	14
85827	Keylever, space	1-6
85917	Bearing	5-9
85931	Post, Spring	5-6
85934	Screw (¼-32 Pilot)	11
85935	Post, Spring	5
85936	Post	10
85937	Insulator	10
85947	String	9
85957	Spacer	9
85958	Motor, Shunt	17
85966	Bracket	8
85967	Post, spring	8
85968	Screw (6-40 Thumb)	8
85969	Block, adjusting-pivot	8
85970	Washer, spring	8
85971	Spacer	8
85972	Nut (6-40 Hex.)	8
85973	Lever	8
85976	Spacer	8
85977	Slide, space rack	8
85980	Rack, spacing	8-9
85981	Rack, pointer-right	8
85982	Rack, pointer-left	8
85985	Bracket	8
85986	Pawl, retaining	8
85993	Stud	8
85994	Pointer, right	8
85995	Pointer, left	8
85996	Segment, pointer	8
85997	Spacer	8
85998	Cam	8
85999	Post	8
86007	Detent	7
86025	Pad, top	14
86028	to 86030 Lever, Counting Code	19
86081	Shaft, worm-R.H.	4
86087	Spring, Garter	4
86090	Collar, Reset	4
86091	to 86102 Lever, Counting Code	19
86103	Bail, Zero Lever	5
86106	Lever, counting code	6-19
86203	Post	9
86204	Lug, Reset	1
86205	Guide	1
86206	Plate	1
86209	Stud	5
86214	Collar, Adjusting	9
86215	Lever, Collar Reset	5
86216	Screw (4-40 Shoulder)	9
86219	to 86247 Lever, Counting Code	19
86252	Link	9
86253	Lever, release	9
86273	Spring	11
86278	Hub	4
86279	Gear	4
86290	to 86295 Lever, Counting Code	19
86296	Spring	7
86303	Bracket	7
86304	Spring	4
86308	Screw, Clamping (10-32 x 4-5/16)	16
86309	Bushing, Outlet (60 Cycle)	16
86311	Rotor (with Cut-out Switch) (60 Cycle)	16
86314	Washer, Steel	16
86320	Screw (8-32 x 1-1/16)	16
86321	Ring, Split (with 55318 Screws)	16
86322	Bearing, Ball (Both Ends)	16
86323	Nut (7/16-24 R. H.)	16
86324	Nut (7/16-24 L. H.)	16
86325	Switch, Cut-out (with 86326 Springs) (60 Cycle)	16

NUMERICAL INDEX

PART NUMBER	DESCRIPTION	PAGE
86327	Bushing (Fibre)	16
86329	Screw (4-40 x 7/16)	16
86340	Wrench, Capstan	20
86341	Screw (10-32 x 3/16)	5-7
86342	Rotor (Assy.) (with Bearing and Switch) (60 Cycle)	16
86524	Shaft	7
86534	Clamp	6
86559	Plate, retaining (end)	2
86560	Plate, retaining (center)	2
86561	Clamp	2
86615	Rotor (Assy.) (with Bearing and Switch)	16
86616	Spring	16
86713	Screw (4-48 x 3/8)	16
86738	Plate, Support	5
86739	Screw (6-40 x 1/4 Special)	5
86740	Screw (4-40 x 3/16)	5
86746	Screw (6-40 Shoulder)	6
86755	Plate, bottom	2
86774	Screw (6-40 Shoulder)	10
86848	Grommet, Rubber (60 Cycle)	15
87182	Disc, Transparent	6
87494	Bracket, Clutch Arm	5
87636	Screw (2-56 x 3/16)	14
87697	1/2"-3/4" Wrench, Open End	20
87942	Bracket	7
87943	Bracket, selector bar	6
88699	Bushing, Eccentric	7
88749	Sleeve, Bearing	4
88750	Nut Bearing (3/16-40 Special)	4
88751	Washer, Slotted	4
88752	Washer (Felt)	4
88753	Washer	4
88754	Shaft	4
88803	Spring	8
88976	Screw (6-40 Shoulder)	8
88994	Foot, Aluminum	2
88995	Post	1
88996	Loop	1
88997	Bar, cross	1
88999	Lever, actuating-return	7
89000	Extension	7
89003	Keylever, carriage return (1)	1-7
89004	Clamp, cable	1
89005	Screw (6-40 Shoulder)	7
89394	Wheel, Star	11
89395	Nut (5/32-40 Hex.)	11
89408	Bushing	6
89431	to 89436 Lever, Counting Code	19
89462	Gear (40-T)	18
89463	Pinion (12-T)	18
89478	Base, Clutch	5
89896	Cup, Oil	4
89897	Nut, Oil Cup (10-32 Hex.)	4
89900	Lever, counting code	6-19
89954	1/4" Wrench, Socket	20
89955	5/16" Wrench, Socket	20
89969	Washer, Fiber	18
89982	Oiler	3-4
89985	Cap, Oiler	3-4
89986	Washer, Oiler	3-4
89987	Wick, Oil	4
90490	Shim	18
90951	Washer, Lock	15
91041	Stator, Wound (with Base)	16
91115	Motor Cable (Assy.)	1-12
91682	Lever, counting code	6-19
91683	Nut (15/32-32 Hex.)	1
91741	Guide	6
91837	Washer, Fiber	17
92468	Washer, felt	16
92470	Washer, Cup (Fibre)	16
92575	Motor, Synchronous	16
92754	Pawl, space	9
92757	Screw (6-40 eccentric)	9
92759	Rod, spacer	9
93063	Bar, perforating selector (C-1C)	6
93064	Bar, perforating selector (C-2C)	6
93065	Bar, perforating selector (E-1C)	6
93066	Bar, perforating selector (E-2C)	6
93075	Nut (15/32-32 Ring)	1
93108	Washer, Lock	16
93443	Post, spring	9
93715	Switch and cable (assem.)	1
93811	Gauge, Wire (.030")	20
93822	Gauge, Flat (.004")	20
93823	Gauge, Flat (.005")	20
93824	Gauge, Wire (.018")	20
93825	Gauge, Wire (.025")	20
93827	Gauge, Wire (.055")	20
93828	Gauge, Wire (.012")	20
93833	Gauge, Flat (.003")	20
93893	Bushing, Bronze	5
94558	Base	16
94559	Shield, End (60 Cycle)	16
94560	Shield (End)	16
94561	Stator (with Winding) (60 Cycle)	16
94562	Spring, Trunnion	16
94565	Screw (8-32 x 11/32)	16
94566	Screw (8-32 Shoulder)	16
95013	Lever, Counting Code	19
95123	Lever, Counting Code	19
95268	to 95272 Lever, Counting Code	19
95585	to 95588 Lever, Counting Code	19
96340	Spring	6
96356	Gauge, Wire (.002")	20
96358	Gauge, Flat (.002")	20
96360	Gauge, Flat (.006")	20
96362	Gauge, Flat (.007")	20
96364	Gauge, Flat (.010")	20
96369	Gauge, Wire (.006")	20
96371	Gauge, Wire (.008")	20
96373	Gauge, Wire (.010")	20
96375	Gauge, Wire (.015")	20
96377	Gauge, Wire (.020")	20
96383	Gauge, Wire (.035")	20
96385	Gauge, Wire (.040")	20
96389	Gauge, Wire (.045")	20
96391	Gauge, Wire (.050")	20
96393	Gauge, Wire (.060")	20
96399	Gauge, Wire (.065")	20
96401	Gauge, Wire (.070")	20
96403	Gauge, Wire (.075")	20
96405	Gauge, Wire (.080")	20

NUMERICAL INDEX

PART NUMBER	DESCRIPTION	PAGE
96593	Chute, Chad	12
98136	Gauge, Wire (.037")	20
101398	Switch, Cut-out (with 101399 Springs) (25 Cycle)	16
104702	Screw (4-40 x 7/16)	5
105435	Bracket and Rod	14
105918	Spacer	16
110435	Nut (4-40 Hex.)	5-6-9
110437	Spring	8-9
110442	Driver, Screw	20
110443	Scale, 8 oz.	20
110444	Scale, 32 oz.	20
112621	Screw, shoulder (4-40 x ½)	6
112622	Screw (4-40 Shoulder)	9
112625	Screw (6-40 Shoulder)	9
112626	Nut (10-32 Hex.)	6-7-11-12
112627	Nut (2-56 Hex.)	13-14
112630	Spring	9-11
112634	Spring	12
112645	Block, Punch	11
113947	Insulator	16
114321	Motor, Synchronous (25 Cycle)	16
114322	Capacitor (180 MFD)	18
114323	Capacitor (150 MFD)	18
115733	Copyholder (Assy.)	14
117087	Screw, (6-40 Shoulder)	8
117375	Case (with Gauge Holder and Lifter)	20
117766	Bracket	18
117781	Kit, Gauge	20
119647	Ring, retaining	16
119652	Retainer	13
119655	Retainer	13
119725	Plate, Copyholder	13
119737	Rotor (Assy.) (with Bearing and Switch) (25 Cycle)	16
119738	Rotor (with Cut-out Switch) (25 Cycle)	16
119739	Shield, End (25 Cycle)	16
119740	Bushing, Outlet (25 Cycle)	16
119741	Stator (with Winding) (25 Cycle)	16
119783	Cover, Punch Unit—Upper	12
119784	Cover, Punch Unit—Lower	12
119785	Box, Chad	12
119930	Washer, spring	16
119931	Washer, steel	16
120700	Screw, Field Core (12-28 Set)	17
120701	Screw, Brush Holder (8-36 x 5/16)	17
121995	Lever, Tape Tension	11
122750	Oil Wick	3
122751	Oil Wick	3
122824	to 122828 Lever, Counting Code	19
123311	to 123313 Lever, Counting Code	19
123581	Knife, Tape	11
123601	Bar, perforating selector (A-1D)	6
123602	Bar, perforating selector (A-2D)	6
123603	Bar, perforating selector (B-1D)	6
123604	Bar, perforating selector (B-2D)	6
123607	Bar, perforating selector (D-1D)	6
123608	Bar, perforating selector (D-2D)	6
123722	Cap, bearing	5
123726	Bar, perforating selector (C-1F)	6
123727	Bar, perforating selector (C-2F)	6
124935	Core	13
124936	Filler, Wood	13
125005	Screw (2-56 x 3/16)	13
125009	Nut (10-32 Hex.)	17
125011	Washer	6-7-11-14
125012	Socket	10
125015	Washer	18
125016	Bushing, Outlet	17
125119	Screw (4-40 Shoulder)	9
125123	Screw (4-40 x ½)	6
125124	Screw (4-40 Shoulder)	9
125125	Screw (4-40 Shoulder)	8
125126	Screw (2-56 x 9/32)	9
125148	Screw (4-40 Shoulder)	6
125152	Screw (6-40 Pilot)	5
125171	Screw (10-32 x ½)	13
125177	Screw (¼—32 Pilot)	17
125218	Nut (¼-32 Hex.)	11
125229	Nut (6-32 Hex.)	13
125235	Nut (4-36 Hex.)	14
125250	Spring	10
125260	Spring	5-6
125262	Spring	12
125307	Washer	6
125390	Washer	8
125490	Roll, Feed	11
125683	Bushing, Eccentric	11
125686	Detent	11
125698	Roller	6
125752	3/16" Wrench, Screw Driver Socket	20
125757	7/16" Wrench, Socket	20
125763	3/16"-¼" Wrench, Open	20
125775	⅜"-7/16" Wrench, Open	20
125776	5/16" Wrench, Open	20
125783	Stone, Carborundum	20
125789	Shim	5
129561	Wick, oil	4
129567	Washer, felt	3-4
132063	Plate, Feed Pawl Deflecting	11
132124	Induction Motor	15
132136	Screw (6-40 Shoulder)	6
132154	Spring	10
132155	Stop Spring	10
132156	Nut (Assem.)	10
132189	Lamp	10
132190	to 132200 Lever, Counting Code	19
132203	to 132206 Lever, Counting Code	19
132208	Felt Washer	3-4
132210	Felt Washer	3-4
132248	Shoulder Screw	13
132249	Cover Assembly	13
132252	Container Assembly	13
132254	Hub	13
132256	Stud	13
132349	Tape Tension Spring	13
132445	Spring	2
132476	to 132507 Lever, Counting Code	19
132536	to 132584 Lever, Counting Code	19