TELETYPESETTER®

BULLETIN 1000

ADJUSTMENTS AND LUBRICATION

FOR THE

STANDARD LIGHT TOUCH "1000" PERFORATOR

FAIRCHILD
GRAPHIC EQUIPMENT
A DIVISION OF FAIRCHILD CAMERA AND INSTRUMENT CORPORATION

221 FAIRCHILD AVENUE, PLAINVIEW, L.I., N.Y.

TELETYPESETTER®

BULLETIN 1000

ADJUSTMENTS AND LUBRICATION

FOR THE

STANDARD LIGHT TOUCH "1000" PERFORATOR

FAIRCHILD

GRAPHIC EQUIPMENT

A DIVISION OF FAIRCHILD CAMERA AND INSTRUMENT CORPORATION

221 FAIRCHILD AVENUE, PLAINVIEW, L.I., N.Y.

Copyright 1963 by Fairchild Camera and Instrument Corp.
Copyright in all countries participating in International Convention and Pan American Conventions. All rights reserved including rights of translations into all languages.

Printed in U.S.A.

LIST OF EFFECTIVE PAGES

DECEMBER 1965

TITLE PAGE	ORIGINAL
A-B	Original
Page 1	Change 1
Page 2-9	Original
Page 10	Change 1
Page 11-15	Original
Page 16-21	Change 1
Page 22	Original
Page 23-33	Change 1
Page 34-35	Original
Page 36	Change 1
Page 37-39	Original
Page 40	Change 1
Page 41	Original
Page 42-43	Change 1
Page 44-46	Original
Page 47-48	Change 1
Page 49-54	Original

The above list indicates the effective pages as of the date of issue. When a change takes place in any of the following pages, this page likewise changes.

CONTENTS

DESCRIPTION OF STANDARD LIGHT TOUCH "1000" PERFORATOR 1

PARTS LOCATION

- *a.* Keyboard Base (top view) 2
- *b.* Keyboard Base (bottom view) 3
- *c.* Perforator and Count Selector Bars 4
- *d.* Main Shaft 5
- *e.* Counting Shaft 6
- *f.* Stop Pin Selecting Code 7
- *g.* Punch Unit 8
- *h.* Spacing Rack 9
- *i.* Count Inserter 10
- *j.* Six Unit Code Chart 10

ADJUSTMENTS

- *a.* General 11
- *b.* Alphabetical Adjustment Index 12-13-14-15
- *c. Instructions:*
  - (1) Removing Count Selector Bar Assembly 16
  - (2) Replacing Count Selector Bar Assembly 16
  - (3) Removing Perforator Selector Bar Assembly 16
  - (4) Replacing Perforator Selector Bar Assembly 16
  - (5) Removing Justification Pointer Rack Assembly 32
  - (6) Replacing Justification Pointer Rack Assembly 33
  - (7) Removing and Replacing Punch Unit Assembly 43
  - (8) Removing and replacing Punch Block Assembly 44
  - (9) Removing and Replacing Counting Shaft Assembly 26

TROUBLE SHOOTING (SYMPTOMS) 50-51-52

LUBRICATION CHART 53-54

INTRODUCTION

The maintenance of TELETYPESETTER equipment requires a certain amount of mechanical ability and, therefore, should only be attempted by personnel who have this ability.

Fairchild Graphic Equipment maintains a school for the purpose of training our customers' personnel in the maintenance of TELETYPESETTER equipment and it is strongly recommended that all personnel assigned to the maintenance of TELETYPESETTER equipment attend the complete course; there is no tuition charge for this service.

This Bulletin is meant to supplement, not to replace, the maintenance training which is available at the Teletypesetter school.



DESCRIPTION OF TELETYPESETTER MODEL 1000 STANDARD PERFORATOR

The Model 1000 Standard Perforator designated TPE 211, is designed for use with matrices cut on the unit system and is recommended for newspaper application. This Perforator contains a fixed counting mechanism. Tape may be prepared for setting all types of composition with unit font matrices from 5½ to 12 point.

The design of this new Perforator, while retaining the proven features of the widely used TELETYPESETTER Perforators, includes new advances that not only provide ease of operation, but maintenance as well.

It has an improved touch which minimizes operator fatigue. A control has also been provided by which the operator may adjust the touch to suit his individual preference. The keyboard speed has been increased and is capable of being operated at 1035 keystrokes per minute, which is equivalent to 172 wpm.

A new non-glare stationary scale has been provided to aid the operator in quickly locating the justification range at any time, since the justification area is always in a fixed position. A further aid to the operator is the add-thin space pointer which indicates, without any calculation, if the line will justify when a thin space is added with each spaceband.

In addition, the Perforator has conveniently located indicator lights to show the operator when the keyboard is in the "shift" or "upper rail" position and when the matrix counting pointer is approaching the justification area.

PERFORATOR KEYBOARD BASE

TOP VIEW

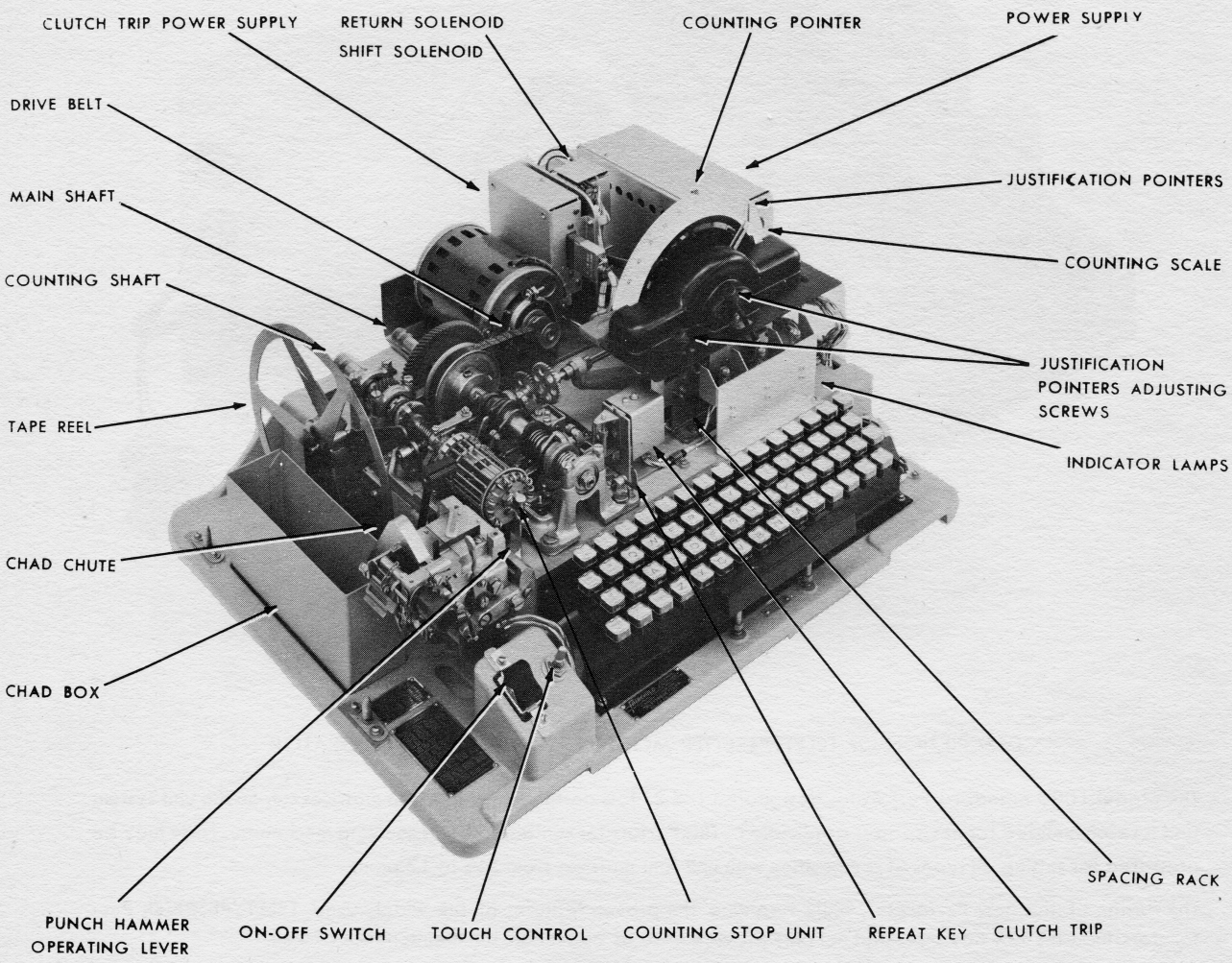

PERFORATOR KEYBOARD BASE
BOTTOM VIEW

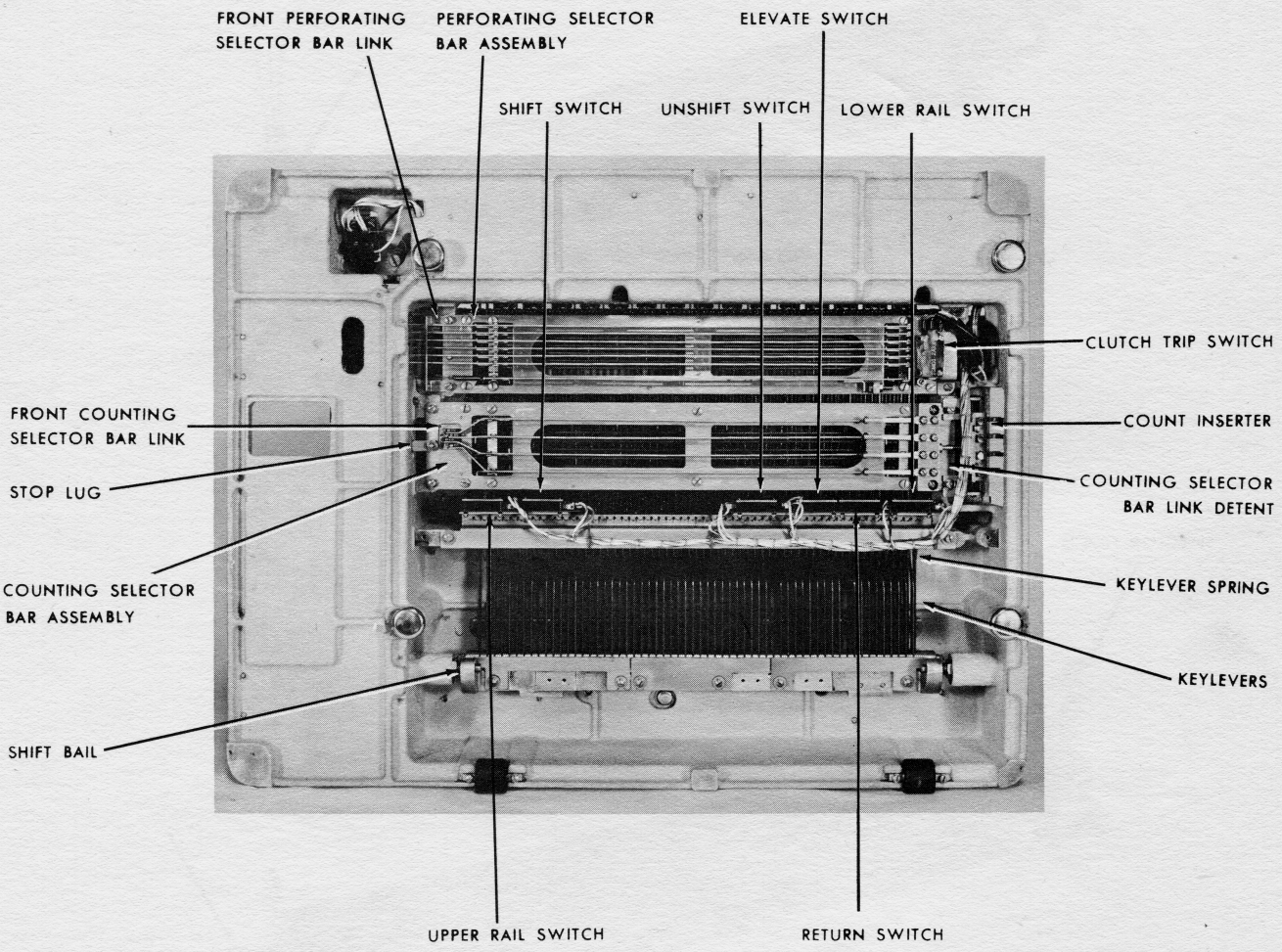

PERFORATING SELECTOR BAR ASSEMBLY

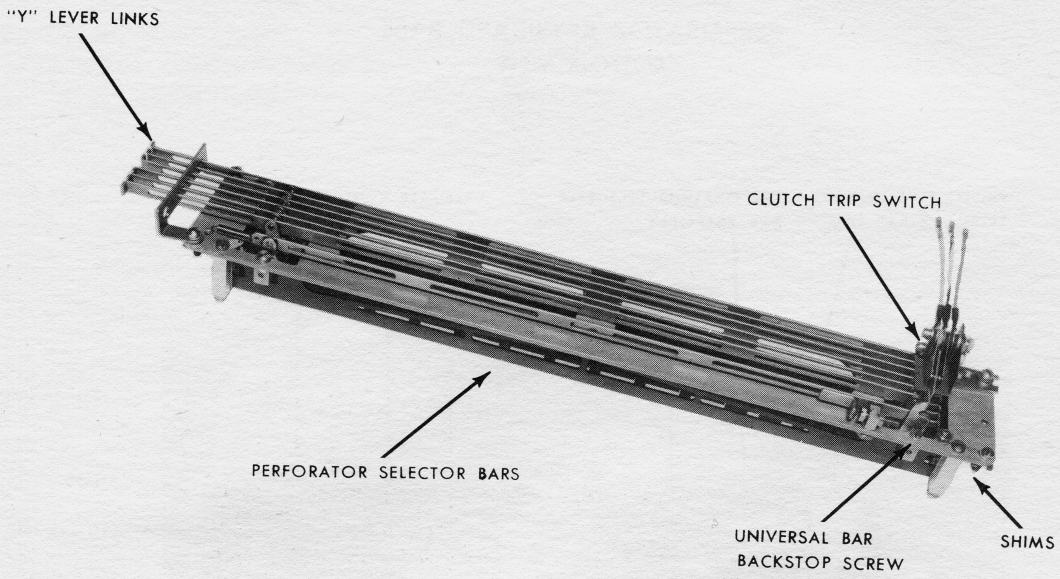

COUNTING SELECTOR BAR ASSEMBLY

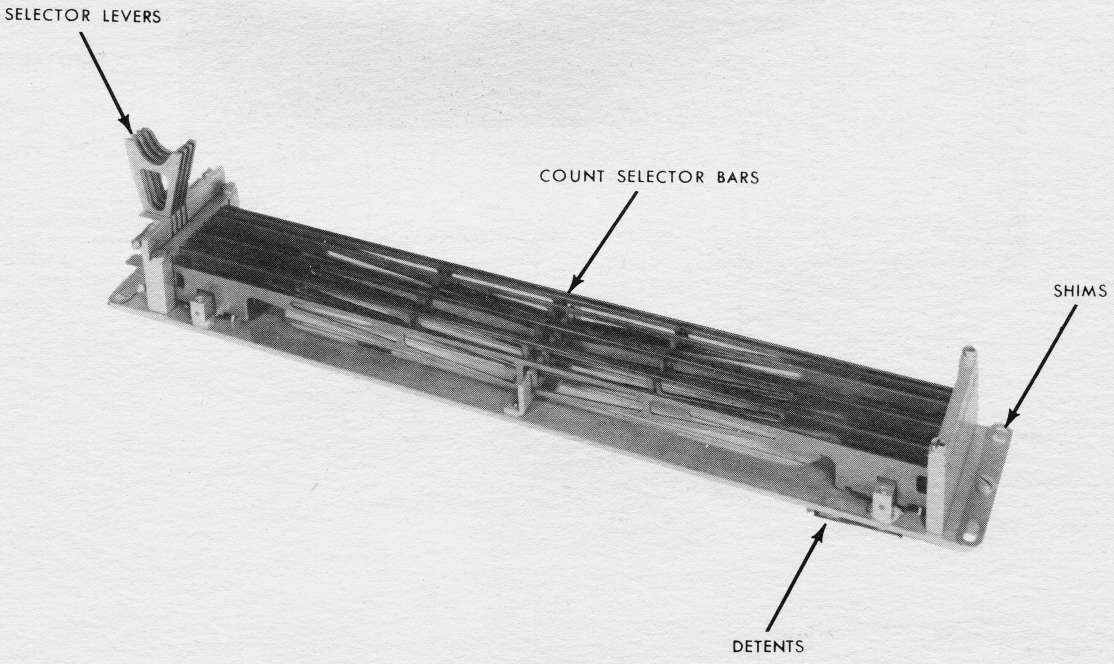

MAIN SHAFT

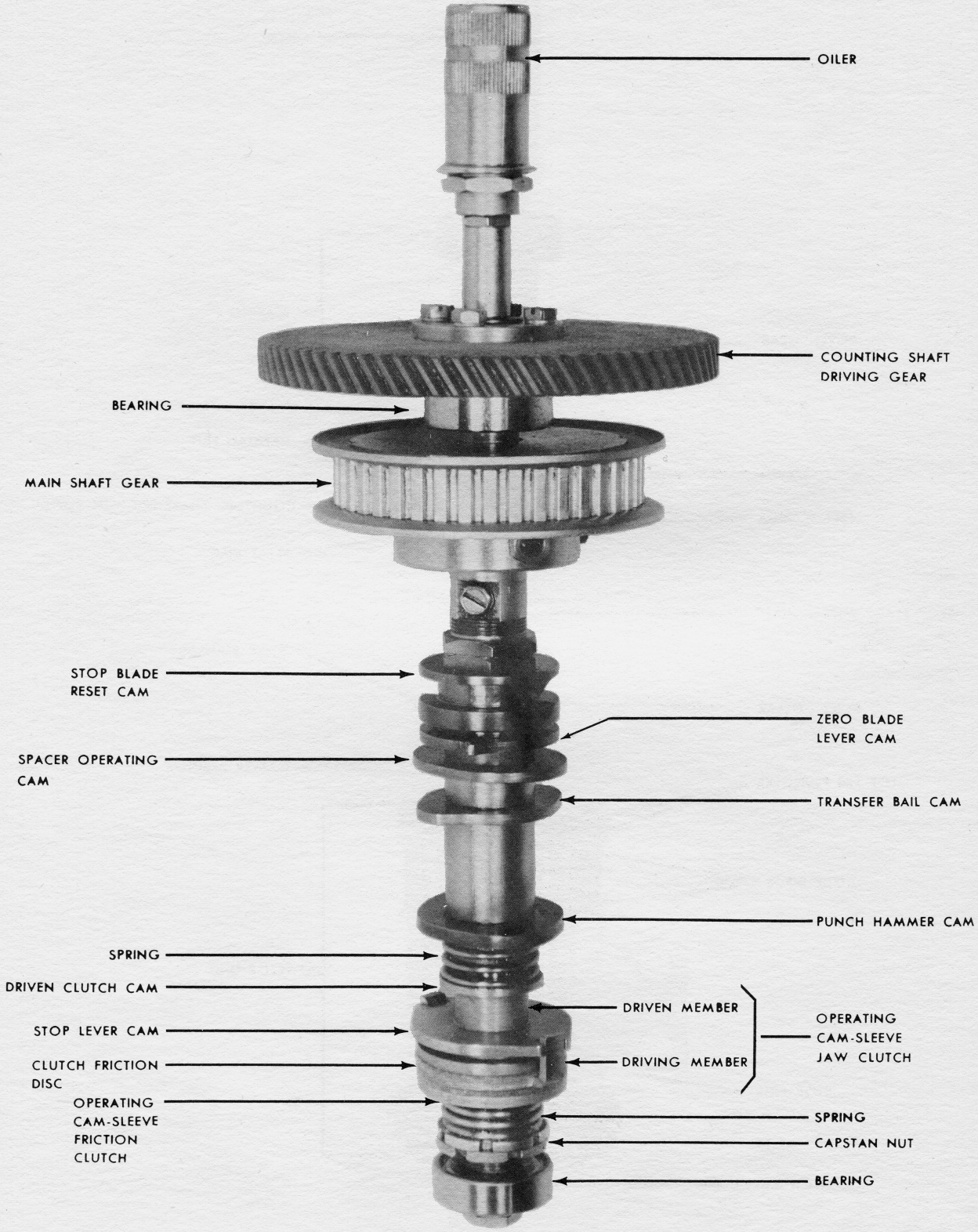
OILER
COUNTING SHAFT DRIVING GEAR
BEARING
MAIN SHAFT GEAR
STOP BLADE RESET CAM
ZERO BLADE LEVER CAM
SPACER OPERATING CAM
TRANSFER BAIL CAM
PUNCH HAMMER CAM
SPRING
DRIVEN CLUTCH CAM
DRIVEN MEMBER
STOP LEVER CAM
OPERATING CAM-SLEEVE JAW CLUTCH
CLUTCH FRICTION DISC
DRIVING MEMBER
OPERATING CAM-SLEEVE FRICTION CLUTCH
SPRING
CAPSTAN NUT
BEARING

COUNTING SHAFT

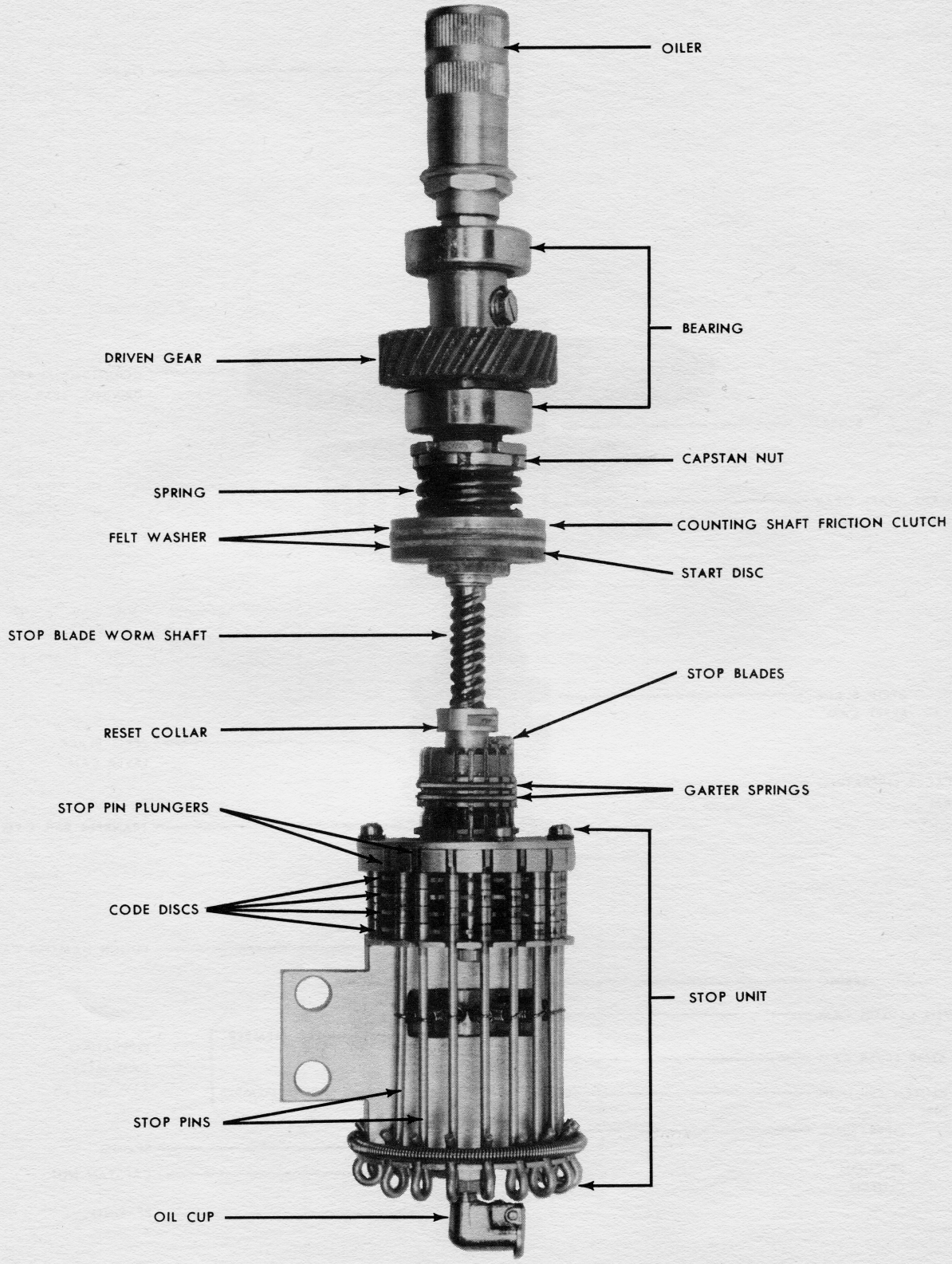

STOP PIN SELECTING CODE USED ON TELETYPESETTER PERFORATORS

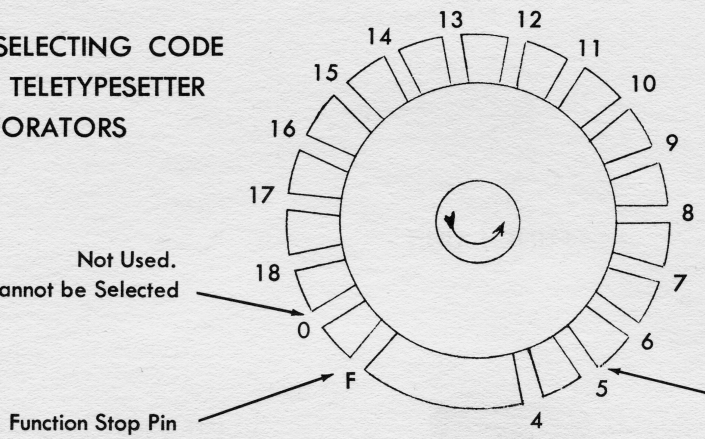

CODE DISCS				4–18 UNITS	
1	2	3	4	UNIT VALUE	STOP PIN SELECTED
			④	4	4
①	②	③	④	5	5
①				6	6
①	②			7	7
①	②	③		8	8
①		③		9	9
	②			10	10
		③		11	11
①	②		④	12	12
①			④	13	13
	②	③		14	14
	②		④	15	15
①		③	④	16	16
	②	③	④	17	17
		③	④	18	18
				–	–

NOTE:
No. 1 Code Disc is in front.


Code Disc turned clockwise against its stops.


Code Disc turned counterclockwise against its stops.

FUNCTION STOP PIN SELECTED ON ONE COMBINATION

PUNCH UNIT

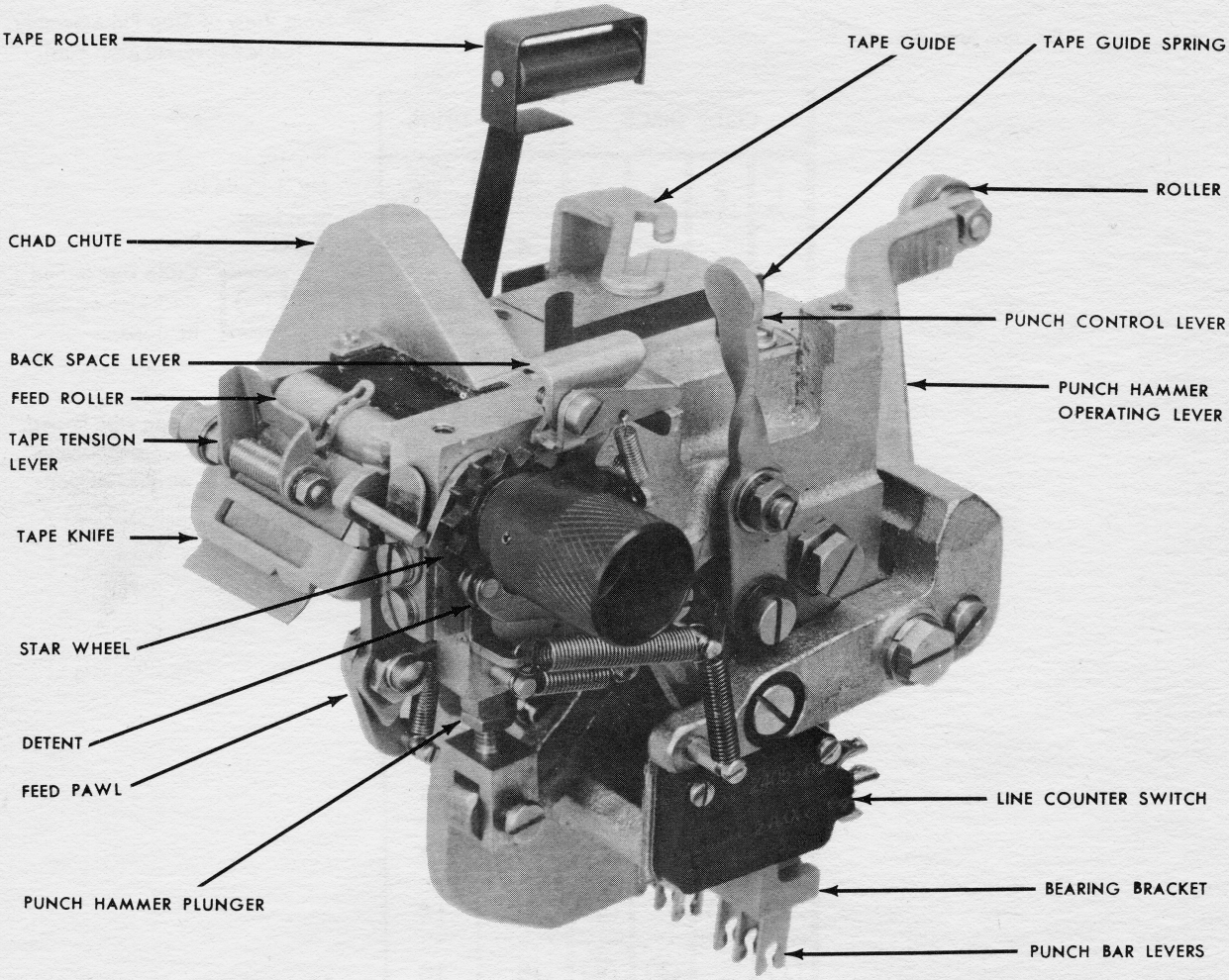
TAPE ROLLER
TAPE GUIDE
TAPE GUIDE SPRING
ROLLER
CHAD CHUTE
PUNCH CONTROL LEVER
BACK SPACE LEVER
PUNCH HAMMER OPERATING LEVER
FEED ROLLER
TAPE TENSION LEVER
TAPE KNIFE
STAR WHEEL
DETENT
FEED PAWL
LINE COUNTER SWITCH
BEARING BRACKET
PUNCH HAMMER PLUNGER
PUNCH BAR LEVERS

JUSTIFICATION POINTER SPACING RACK

FRONT VIEW

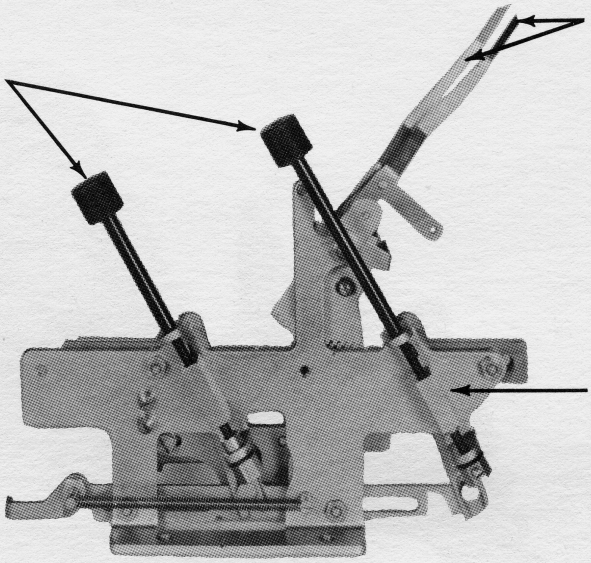

REAR VIEW

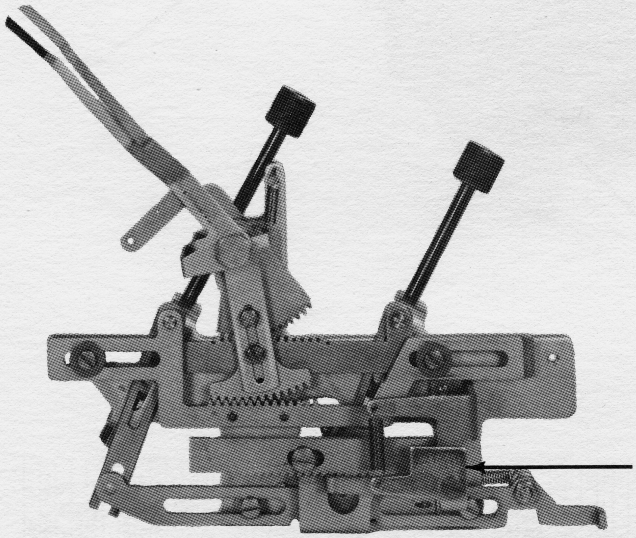

COUNT INSERTER

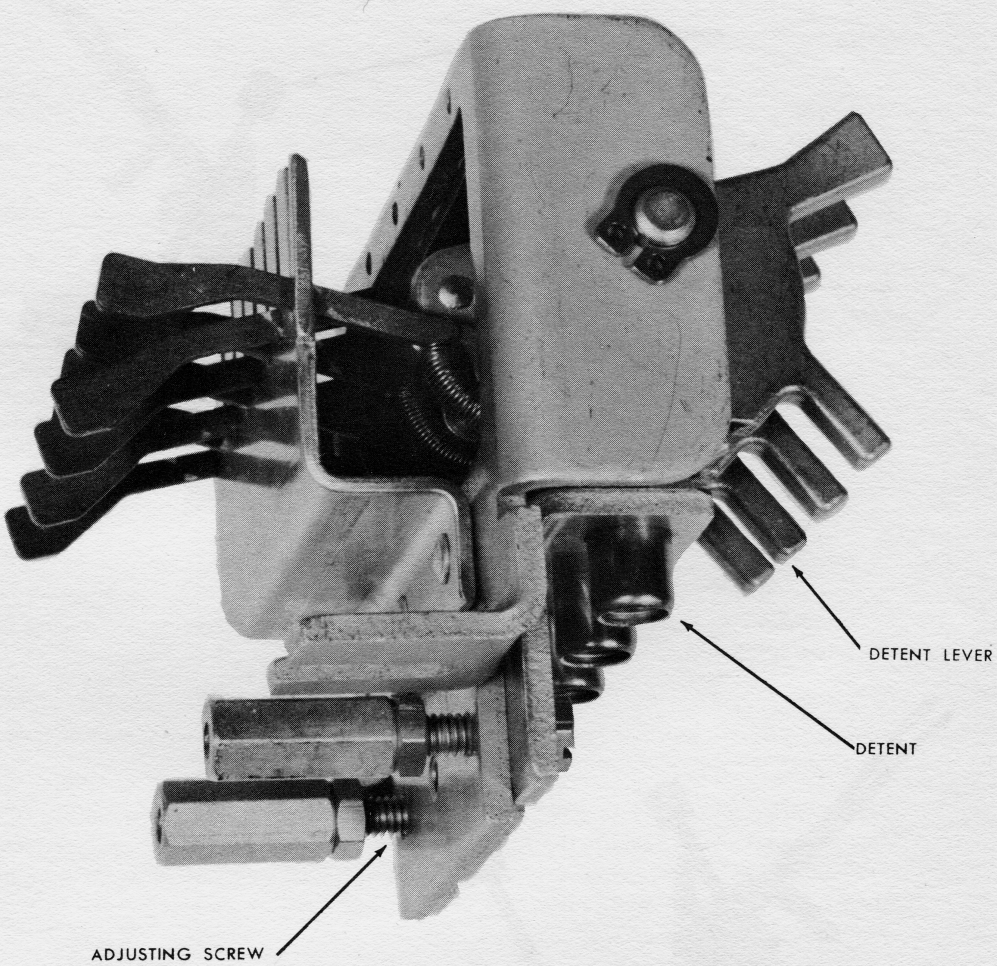

SHIFT / UNSHIFT	Tape Feed	T	O	Space Band	N	H	M	Elevate	I	R	C	L	P	G	V	E	A	S	U	D	J	F	K	Z	W	Y	Q	B	Shift	X	Unshift	Thin Space	3	PF or L.M.	$	Add-Thin Space	Em Space	8	7	@	4	Bell	Comma	Quad Left	En Space	Q R or U.M.	5	)	V Rule Em Sp	2	Em Leader	6	0	En Leader	9	Upper Rail	:	Lower Rail	Period	-	Quad Center	Rub Out
0																																	●	●		●	●																		

ADJUSTMENTS

All adjustments are listed in the sequence followed for complete readjustment of the Perforator. This fact should be kept in mind when a single adjustment is made. As numerous adjustments are inter-related, it is essential that each one be made in the sequence given, and if one adjustment is changed, it is necessary to check related adjustments.

All adjustments should be made at the midpoint between the tolerance limits whenever possible. This is only a *recommendation* and not a *limitation* of the adjustment tolerances specified herein. Adjustments made within limit values required shall be considered satisfactory.

EXAMPLE: If an adjustment requirement specifies a clearance of .010" to .030" between two levers, a .010" feeler gauge shall pass freely through the gap between the levers. A .030" feeler gauge shall *not* pass between the levers, shall perceptibly rub in the clearance between the levers, or shall cause a movement in one or the other or both of the levers when the .030" feeler gauge is inserted between the levers involved in the adjustment requirement.

In cases where the term "some clearance" is used the requirement shall be considered met if light can be seen between the parts involved, or if some perceptible movement in one or the other of the parts involved can be felt or seen.

When it is necessary to readjust any part which is held or locked by clamping screws, mounting screws or lock nuts, be sure to loosen the locking device. After readjustment is completed ed, be sure to reset and tighten the locking device.

Spring tension values given in this Bulletin were derived from measurements made with Teletypesetter spring scales. These spring scales are calibrated for use in a vertical "pull" position. When used in any other position, the reading is an indicated value. In order to obtain The proper spring tension readings, the spring scales which are included in the Teletypesetter Bulletin tool list should be used.

NOTE: In all Figures of this Bulletin, fixed pivot points are designated by solid black circles.

ALPHABETICAL ADJUSTMENT INDEX

Adjustment No.	Description	Page No.
74	Add-thin pointer	39
91	Backspace cam spring tension	46
89	Backspace pawl spring tension	46
8	Case shift indicator lamp switch	18
21	Clutch trip contact gap	21
22	Clutch trip contact spring tension	21
24	Clutch trip contact overtravel	22
75	Count inserter detent bracket	40
76	Count inserter position	40
48	Counting clutch release lever adjustment screw	30
51	Counting pointer clutch spring compression	32
52	Counting pointer clutch spring tension	32
57	Counting pointer return spring arm position	33
1	Counting selector bar assembly shims	16
58	Counting pointer return spring tension	25
33	Count selector bar assembly position	33
3	Count selector bar link detent	17
36	Counting shaft end play	27
13	Counting shaft friction clutch torque	19
66	Eccentric screw	36
62	Intermediate pawl latch	35
61	Intermediate pawl latch spring tension	34
65	Intermediate pawl spring tension	35
72	Justification pointers return spring tension	38
73	Justification pointer spacing	39
78	Justification switch	41
77	Keylever operating switches	41
9	Keylever spring tension	19
43	Left counting cross shaft	45
44	Left counting cross shaft end play	45

ALPHABETICAL ADJUSTMENT INDEX

Adjustment No.	Description	Page No.
56	Left justification pointer returned position	33
80	Line counting switch	42
10	Motor position	19
18	Non-repeat latch spring tension	20
14	Operating cam sleeve friction clutch	19
11	Operating cam sleeve jaw clutch	19
12	Operating cam sleeve jaw clutch spring tension	19
2	Perforating selector bar assembly shims	16
67	Pivot adjusting block screws friction	35
86	Punch bar levers bearing bracket	45
87	Punch bar levers detent	45
88	Punch bar levers detent spring tension	45
90	Punch control bail spring tension	46
83	Punch hammer operating lever	44
82	Punch hammer pivot screws	43
84	Punch hammer spring tension	44
85	Punch hammer stop screw	44
81	Punch unit	43
28	Repeat key activator	24
29	Repeat key actuator spring tension	24
37	Reset collar lever	27
60	Reset lug	34
53	Retaining pawl release lever	32
55	Retaining pawl spring tension	33
47	Return solenoid (Preliminary)	30
49	Return solenoid link up and downstop	31
50	Return solenoid (final)	31
46	Right counting cross shaft end play	29
45	Right counting cross shaft	29
6	Shift solenoid	18

ALPHABETICAL ADJUSTMENT INDEX

Adjustment No.	Description	Page No.
4	Shift bail	17
7	Shift bail balancing spring tension	18
5	Shift bail stop plate	17
63	Space bar lever extension guide plate	35
64	Space bar lever extension spring tension	35
70	Space bar stop	38
59	Spacer rod	34
69	Spacer rod spring tension	37
68	Spacing feed pawl spring tension	37
54	Spacing rack	33
71	Spacing rack slide return spring tension	38
17	Stop lever cam roller eccentric screw	20
19	Stop lever latch adjusting screw	20
16	Stop lever latch spring tension	20
27	Stop lever latch upstop screw	24
15	Stop lever spring tension	20
42	Stop pin spring tension	28
31	Stop unit bracket	25
94	Tape feed pawl	47
95	Tape feed pawl spring tension	47
92	Tape feed roll bearing plate	47
96	Tape feed roll detent final adjustment	48
98	Tape feed roll detent lever spring tension	49
99	Tape guide	49
93	Tape stripper plate	47
97	Tape tension lever spring tension	48
100	Tape tension spring	49
79	Tight line lockout and buzzer switch	42
34	Transfer bail arm	26
32	Transfer bail bracket	25

ALPHABETICAL ADJUSTMENT INDEX

Adjustment No.	Description	Page No.
30	Transfer bail bracket alignment	25
35	Transfer bail spring tension	26
26	Trip mechanism	23
23	Universal bar backstop screw	22
20	Universal bar downstop screw	21
25	Variable touch spring tension	22
40	Zero cam lever adjusting screw	28
41	Zero lever upstop screw	28
39	Zero lever spring tension	27
38	Zero lever stop screw	27

1 COUNTING SELECTOR BAR ASSEMBLY SHIMS

NOTE: Remove perforating selector bar assembly.

Requirement – (a) Hold front (top) counting selector bar link to the right. Clearance between front counting selector bar and lugs on counting code keylever.

Min. .015" – Max. .030" with play taken up in maximum direction.

Requirement – (b) Depress "B" character keylever. Front (top) counting selector bar link locked, all other selector bar links should be locked, or may have a lateral play Max. .020".

To Adjust – By means of shims and half shims raise, lower, or tilt counting selector bar assembly. The number of half shims for the front end to be equal, as well as the rear end.

(c) Rear counting selector bar link to the left; clearance between rear counting selector bar and the lugs on the counting code levers MIN. — .010" with play taken up in the maximum direction.

INSTRUCTIONS FOR REMOVING COUNT SELECTOR BAR ASSEMBLY

With the Perforator on its back so that it is resting on the motor casting, remove the bottom cover by backing off the two screws that hold cover to base casting. Remove the four mounting screws (1269) that mount the count selector bar assembly. Detach count inserter assembly, then remove count selector bar assembly by tilting slightly to clear count selector levers from base casting.

INSTRUCTIONS FOR REPLACING COUNT SELECTOR BAR ASSEMBLY

Secure the assembly to the Perforator base with the four mounting screws (1269), before tightening the mounting screws be sure the count selector bar assembly is positioned to the left so that the adjusting lug (141738) is against the base casting. Replace the count inserter and bottom cover.

2 PERFORATING SELECTOR BAR ASSEMBLY SHIMS

NOTE: Replace perforating selector bar assembly.

Requirement – (a) Depress a central keylever in bottom row. Front perforating selector bar link locked, all other perforating selector bar links should be locked or have a lateral play of not more than .020" All counting selector bar links should be locked or have a lateral play of not more than .030".

Requirement – (b) Recheck foregoing requirement using end keylevers in third row.

To Adjust – By means of shims and half shims raise, lower or tilt perforating selector bar assembly. The number of half shims for the front end to be equal, as well as the rear end.

INSTRUCTIONS FOR REMOVING PERFORATOR SELECTOR BAR ASSEMBLY

Position the Perforator on its back so that it is resting on the motor casting. Remove bottom plate by backing off the two screws that hold the cover to the base casting. Remove universal bar spring and switch connectors. Remove the four screws (1269) that mount the Perforator selector bar assembly and tilt the assembly slightly to remove it from the Perforator base.

INSTRUCTIONS FOR REPLACING PERFORATOR SELECTOR BAR ASSEMBLY

Re-install selector bar assembly. Check to see that the selector bar links engage their respective vertical levers on the punch unit. Secure the assembly to the perforator base with four screws (1269). Position the guide (91741) that lines up the selector bar links on the left hand side so that the links move freely without binding in the guide. Replace Universal bar spring and switch connectors.

3 COUNT SELECTOR BAR LINK DETENTS

Requirement — (a) Each count selector bar link detent roller should ride an equal distance into the right and left notches in count selector bar links, and detent rollers should ride fully on their links.

To Adjust — Position the detent springs by means of their elongated mounting holes.

Requirement — (b) Check tension in one and then the other notch in count selector bar links.
Use 8 oz. scale.
Min. ½ oz. — Max. 1 ½ ozs. to start detent moving. Bend detent springs if necessary to meet adjustment.

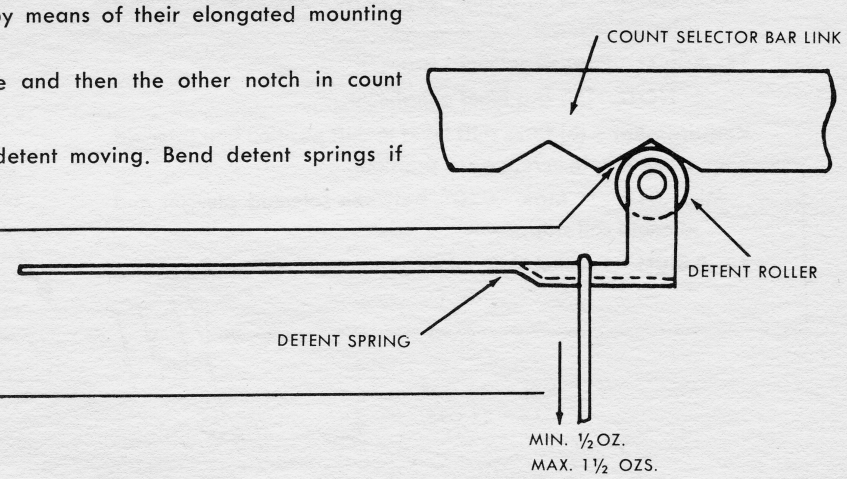

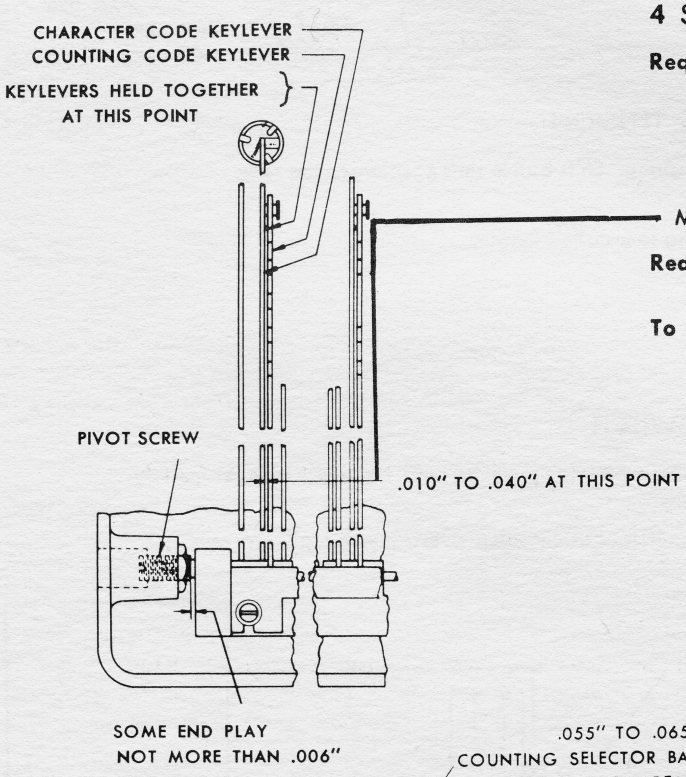

4 SHIFT BAIL

Requirement – (a) Hold forward end of extreme left counting code keylever against its corresponding character code keylever. Clearance between counting code keylever and character keylever at point in the bend of counting code keylever.

Min. .010" – Max. .040" (Check right end).

Requirement – (b) Shift bail should have end play, not more than .006".

To Adjust – Loosen shift bail pivot lock nuts and position bail.

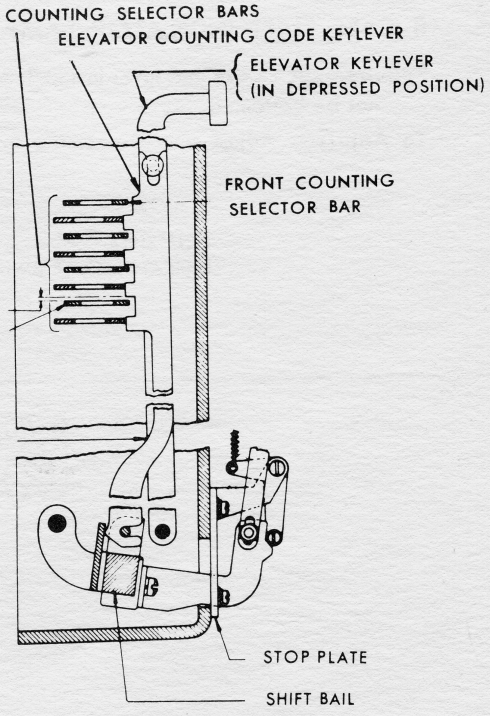

5 SHIFT BAIL STOP PLATE

Requirement – Shift bail in shift position, depress elevator keylever. Clearance between second (from rear) counting selector bar and lug on elevator counting code keylever that is immediately to the front of that selector bar.

Min. .055" – Max. .065".

To Adjust – Loosen shift bail stop plate mounting screws and position plate.

6 SHIFT SOLENOID

Requirement – (a) Case shift lever to ride centrally within shift solenoid plunger.

To Adjust – Position solenoid bracket.

NOTE: This is a blind adjustment.

Requirement – (b) Case shift lever in shift position and solenoid plunger held in rearward position.

Min. .010" – Max. .030" between solenoid plunger and solenoid coil stop.

To Adjust – Position shift solenoid.

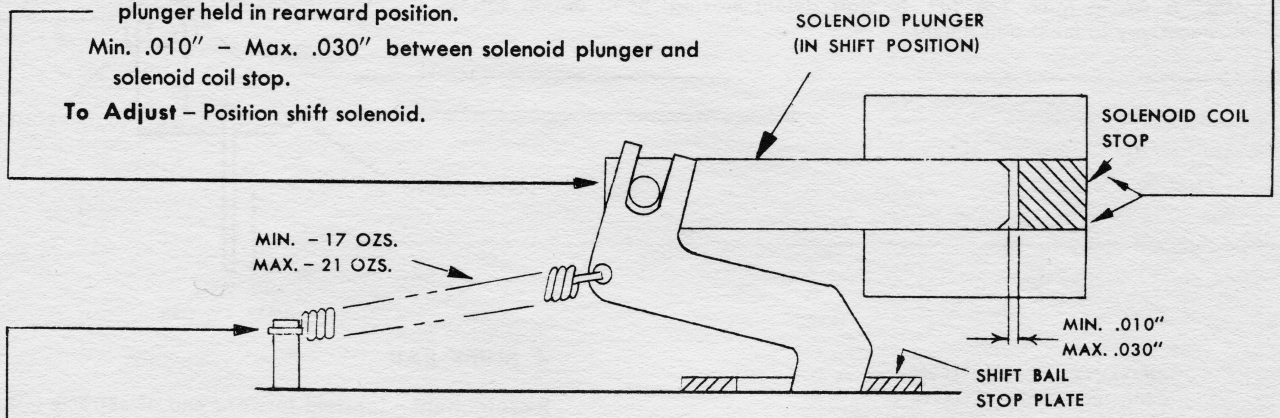

7 SHIFT BAIL BALANCING SPRING TENSION

Requirement – Unhook shift bail balancing spring. Shift bail in shift position, to the rear.

Use 32 oz. scale.

Min. 17 ozs. – Max 21 ozs. to stretch spring to installed length.

8 CASE SHIFT INDICATOR LAMP SWITCH

Requirement – Case shift lever in unshift position; Shift lamp will be "off" but switch plunger must not be bottomed.

To Adjust — Adjust switch mounting bracket to obtain some overtravel on plunger.

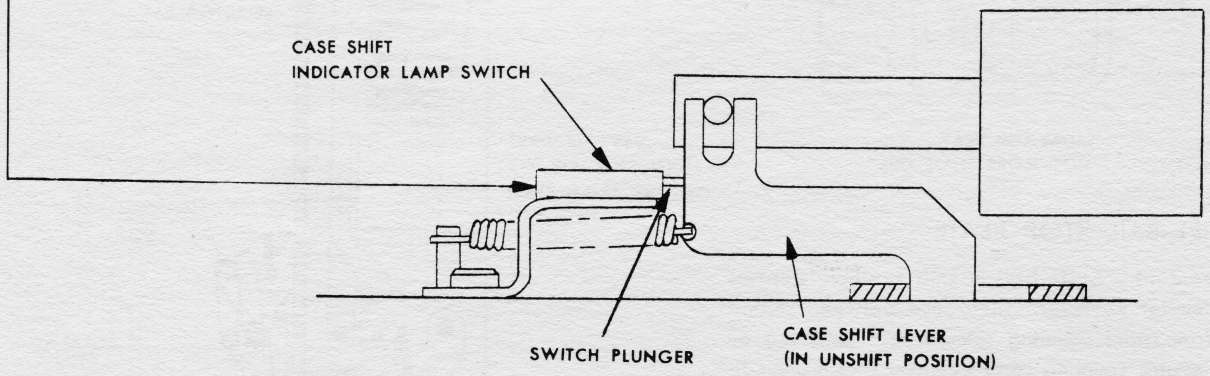

9 KEYLEVER SPRING TENSION

Requirement — The opening between ends of space keylever spring should be 1 5/16", all other keylever springs 1 1/16".

To Adjust — Bend the springs.

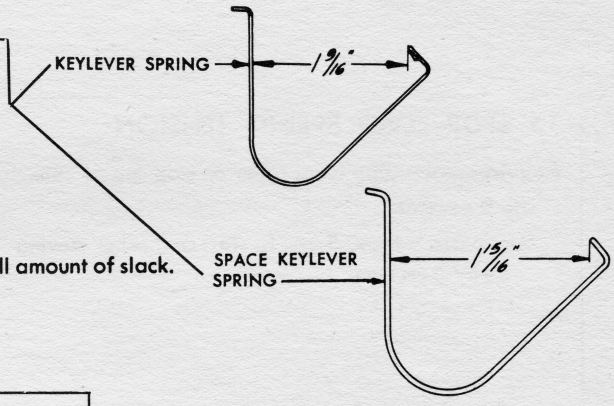

10 MOTOR POSITION

Requirement – Timing belt to ride centrally on driven pulley with small amount of slack.

Min. 3/32" between driving gear and motor casing.

To Adjust – Position pinion pulley and motor mounting plate.

11 OPERATING CAM SLEEVE JAW CLUTCH

Requirement – Operating cam sleeve in stop position.

Min. .006" – Max. .010" at closest point between clutch teeth.

To Adjust – Loosen bearing mounting screws and push main shaft to the front or rear.

12 OPERATING CAM SLEEVE JAW CLUTCH SPRING TENSION

Requirement – Stop lug in horizontal position and driven clutch member engaged by driving clutch member.

Use 12 lb. scale.

Min. 3 lbs. – Max. 4 lbs. to just spearate clutch members.

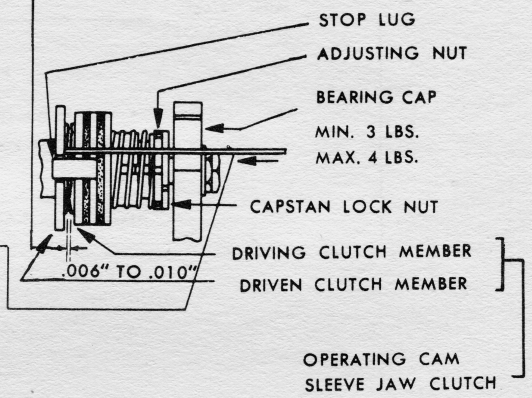

13 COUNTING SHAFT FRICTION CLUTCH TORQUE

Requirement – After motor has run for at least 10 minutes.

Use 32 oz. scale.

Min. 16 ozs. – Max. 24 ozs. to just start friction disc moving in direction opposite to that which motor is driving.

To Adjust – Loosen capstan lock nut and position capstan nut.

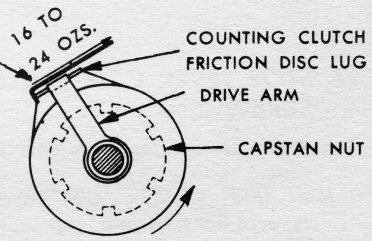

14 OPERATING CAM SLEEVE FRICTION CLUTCH

CAUTION: While checking this tension, hold left end of stop lever latch down to prevent accidental engaging of clutch jaw teeth, which might result in injury to the fingers.

Requirement – Motor running for ten (10) minutes and clutch disengaged.

Use 32 oz. scale.

Min. 24 ozs. – Max. 32 ozs. to just move clutch backward from stop position.

To Adjust – Loosen capstan lock nut and position capstan nut.

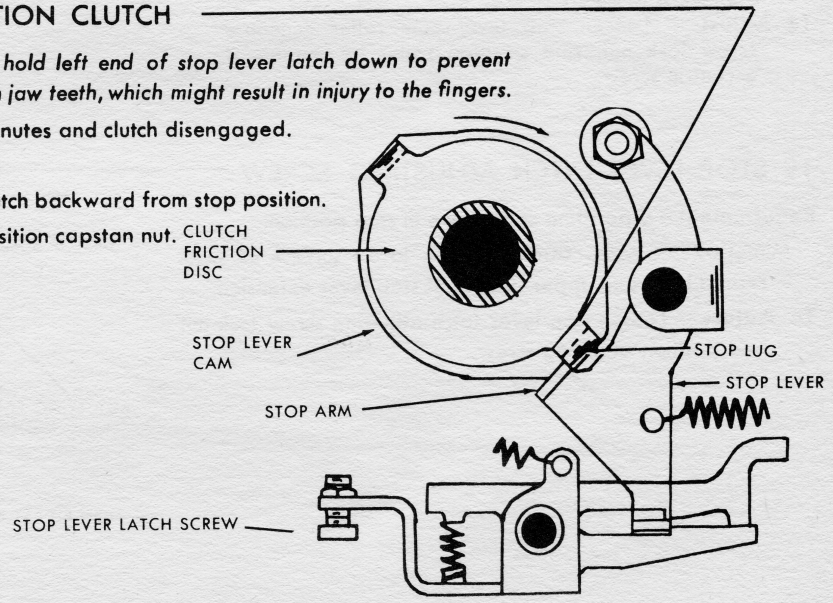

15 STOP LEVER SPRING TENSION

Requirement – Stop lever roller on stop lug of cam.

Use 8 oz. scale.

Min. 6 ozs. – Max. 8 ozs. to start cam roller moving away from cam.

16 STOP LEVER LATCH SPRING TENSION

Requirement – Stop lever roller on a stop lug of cam.

Use 8 oz. scale.

Min. ½ oz. – Max. 1½ ozs. to start stop lever latch moving.

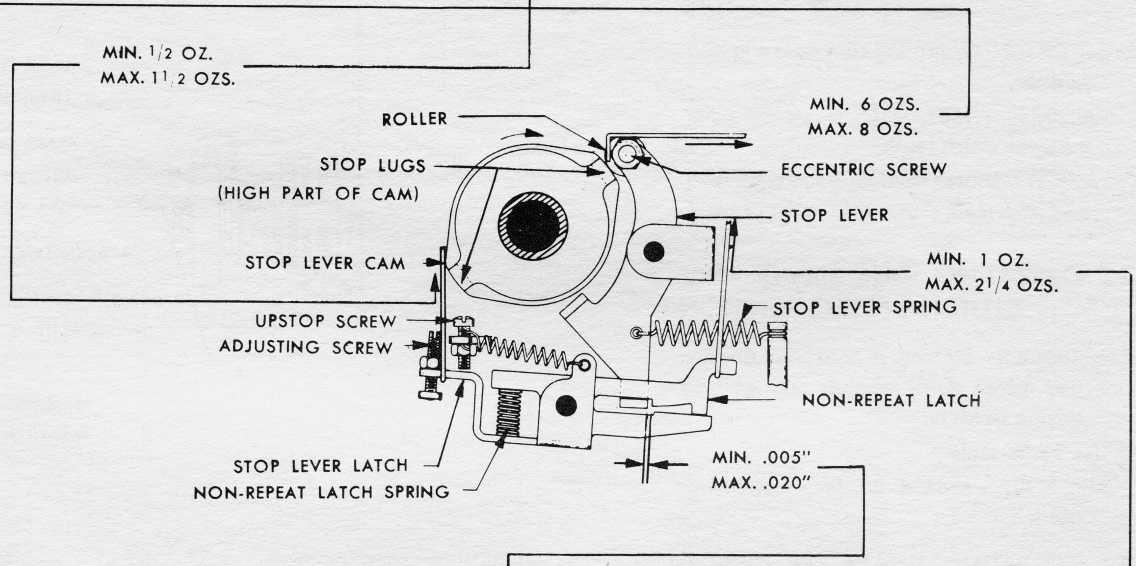

17 STOP LEVER CAM ROLLER ECCENTRIC SCREW

Requirement — Stop lever cam roller on high part of cam.

Min. .005" — Max. .020" overtravel between stop lever extension and non-repeat latch. Check both high parts of cam.

To Adjust — Loosen stop lever cam roller eccentric screw lock nut, and position roller by means of eccentric screw.

18 NON-REPEAT LATCH SPRING TENSION

Requirement – Stop lever roller on stop lug of cam.

Use 8 oz. scale.

Min. 1oz. – Max. 2¼ ozs. to start non-repeat latch moving.

19 STOP LEVER LATCH ADJUSTING SCREW

Requirement – Operating cam sleeve in stop position.

Min. .002" – Max. .006" between lower surface of non-repeat latch and upper surface of stop lever extension.

To Adjust – Loosen stop lever latch adjusting screw lock nut and position adjusting screw.

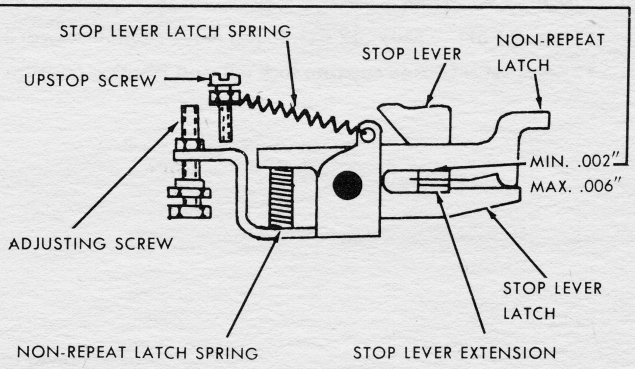

20 UNIVERSAL BAR DOWNSTOP SCREW

Requirement — Back off universal bar down-stop and backstop screws. Holding "B" character keylever depressed, turn the universal down stop screw in until it just touches the "Y" lever extension. Back off screw ¾ turn and tighten lock nut.

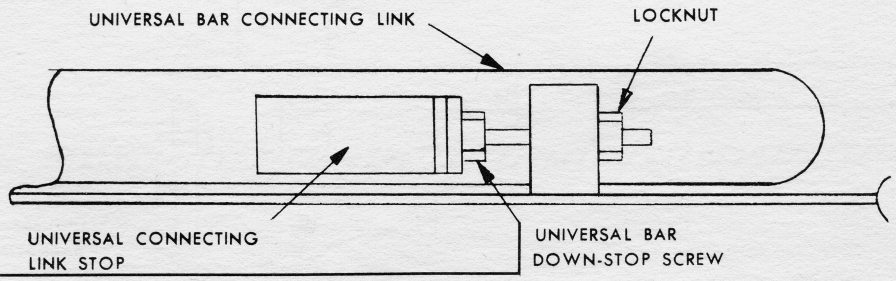

21 CLUTCH TRIP CONTACT PILE-UP GAP

Requirement – Swinger contact in rest position and bearing against the discharge contact. Min. .006"– Max. .010" between swinger contact and normally open contact.

To Adjust – Bend the normally open contact stop blade near its mounting.

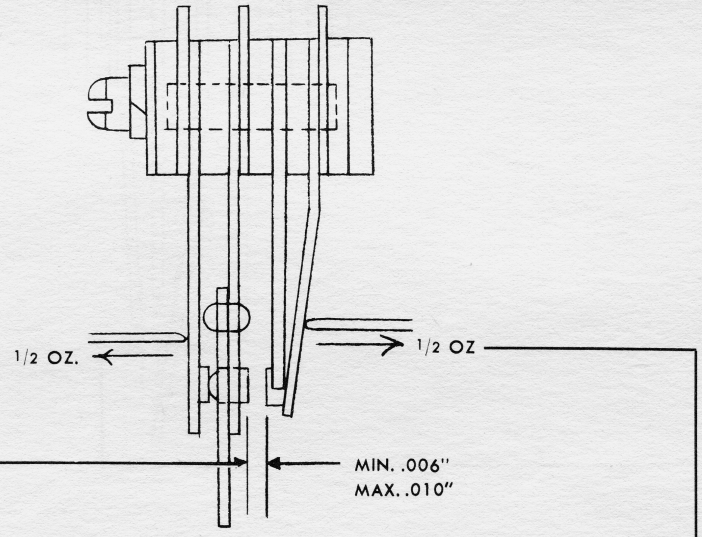

22 CLUTCH TRIP CONTACT PILE-UP SPRING TENSION

Requirement – Swinger Contact against discharge contact. ½ oz. pressure should be needed to separate contacts.

To Adjust – Form contact swinger.

Requirement – Normally open contact against its stop blade. ½ oz. pressure to separate contact from stop blade.

To Adjust – Form normally open contact spring.

23 UNIVERSAL BAR BACKSTOP SCREW ADJUSTMENT

NOTE: In order to check this adjustment, it will be necessary to remake it.

Requirement – Back off universal bar backstop screw. With "R", "Y", and "5" keylevers held depressed at the same time, turn universal bar backstop screw in until it just touches universal bar Y lever. Then turn screw in approximately two-thirds of a turn and tighten lock nut.

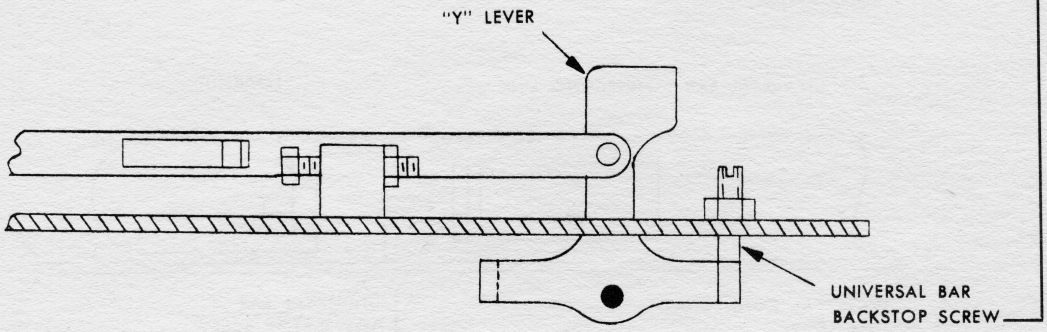

24 CLUTCH TRIP CONTACT PILE-UP OVERTRAVEL

Requirement – With the "B" keylever fully depressed the normally open contact shall close and overtravel its stop.

Min. .035" – Max. .040" overtravel

To Adjust – Position contact assembly.

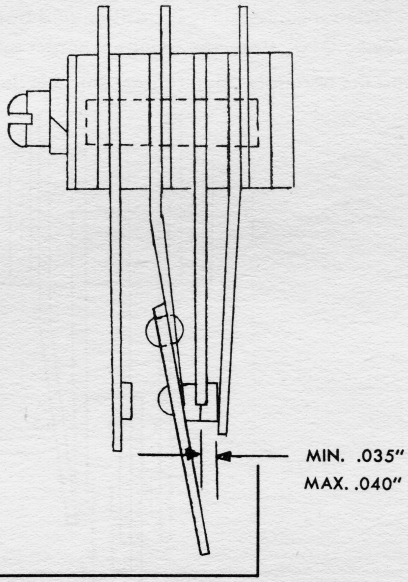

25 VARIABLE TOUCH SPRING TENSION

Requirement – Variable Touch knob in "light touch" position.

Use 8oz. scale .

Min. ¼ oz. – Max. ¾oz. to just start spring moving.

To Adjust – Adjust cord on Variable touch shaft.

26 TRIP MECHANISM ADJUSTMENTS

NOTE: 1. Armature pivot must function freely.
2. The armature should fit freely within the slot in the magnet heel piece and not bind against either side. With spring removed, the armature must fall from the magnet core freely.
3. The armature should meet the face of the magnet core squarely so that .004″ gauge will not fit between the core and armature at any point, while the armature is touching the core.

NOTE: In order to check this adjustment, it will be necessary to remake it.

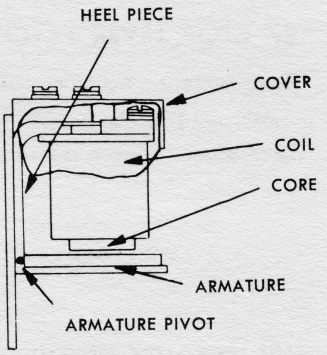

Requirement — (a) With .010″ flat gage held between armature and core move heel piece down until actuating link trips stop lever latch — tighten screws and remove gauge.

Requirement — (b) With the stop lever and stop lever latch engaged there shall be some clearance not more than .003″ between the actuating link and stop lever latch.

To Adjust — Position actuating link stop with its lock nut loosened.

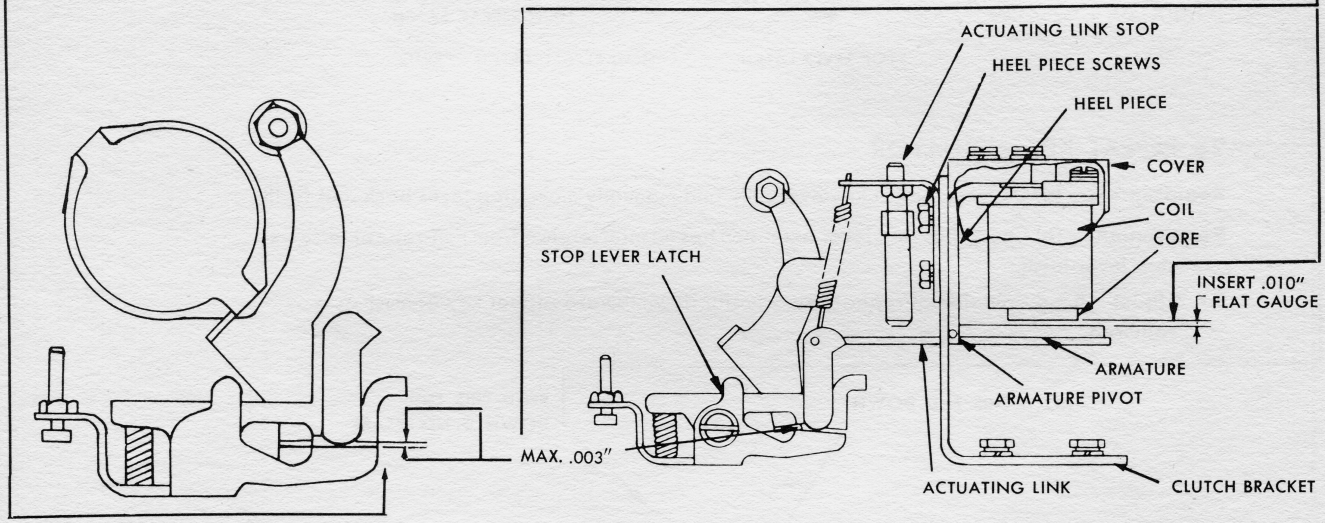

Requirement — (c) Operating Cam Sleeve in stop position.
Min. .020″ — Max. .040″ between the non-repeat latch and the actuating link.

To Adjust — Position bracket. Take up plan in actuating link. Clearance between actuating link and non-repeat latch minimum of .020″.

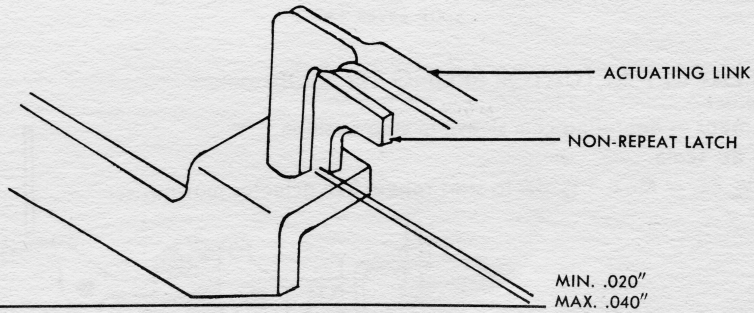

27 STOP LEVER LATCH UPSTOP SCREW

Requirement – Actuating link held against the core of electric clutch coil.
Min. .015" – Max. .025" between upstop screw and stop lever latch.

To Adjust – Loosen upstop screw lock nut and position screw.

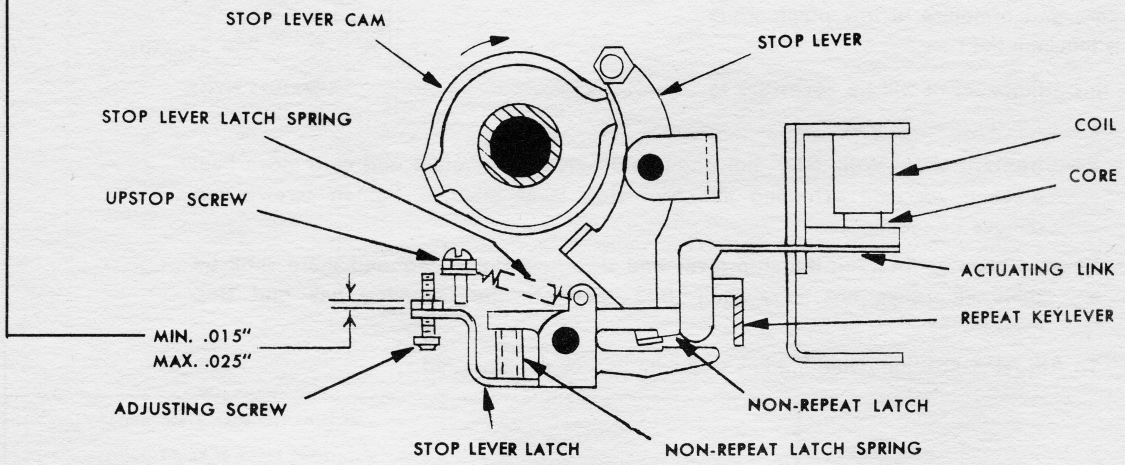

28 REPEAT KEY ACTUATOR

Requirement – (a) Depress repeat keylever fully and manually move stop lever back and forth.

Requirement – (b) Check that stop lever extension has no interference from non-repeat latch and stop lever latch.

To Adjust – Bend right side of repeat key actuator down toward repeat key as much as is required.

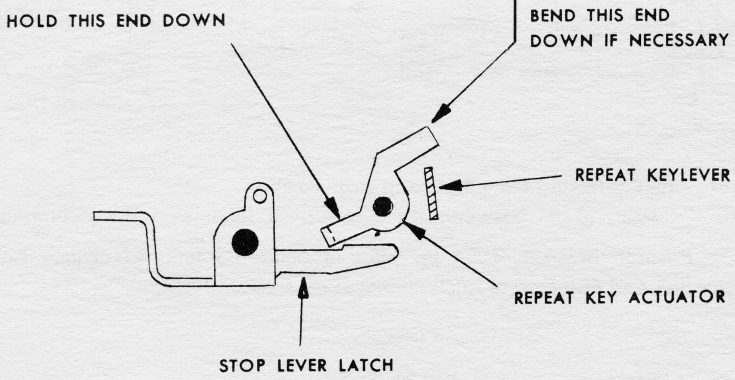

29 REPEAT KEY ACTUATOR SPRING TENSION

Requirement — operating cam sleeve in stop position.
Use 8 oz. scale.
Min. ½ oz. — Max. 1 ½ oz. to start repeat key actuator moving.

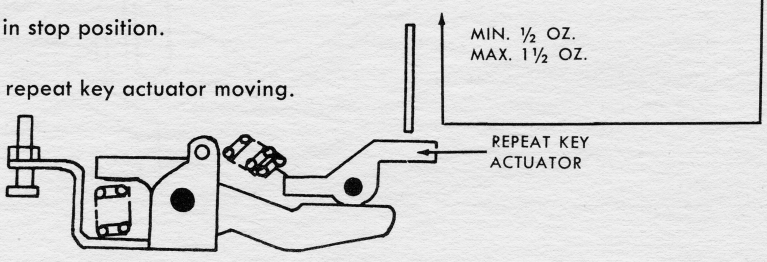

30 TRANSFER BAIL BRACKET ALIGNMENT

Requirement – "T" transfer levers should line up with the count selector levers.

To Adjust – Loosen transfer bail bracket and guide plate mounting screws and position bracket. Guide plate will maintain front to rear position of transfer bail, while the bail bracket is adjusted left to right for the transfer bail bracket adjustment.

31 STOP UNIT BRACKET

Requirement – Count code discs should line up with the "T" transfer levers.

To Adjust – Loosen stop unit bracket mounting screws and position bracket. Hold stop unit bracket down against horizontal locating surface, when tightening screws.

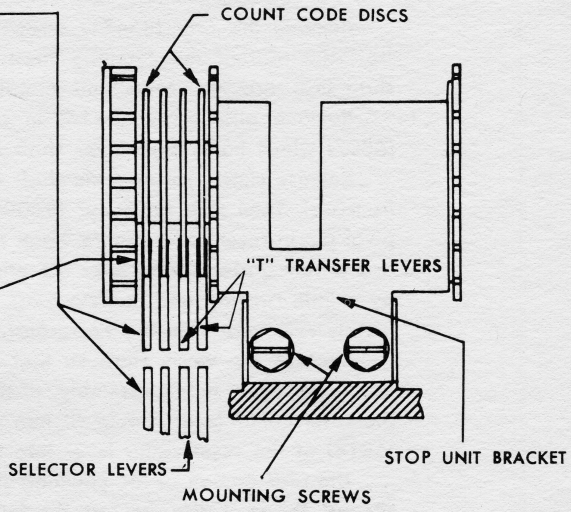

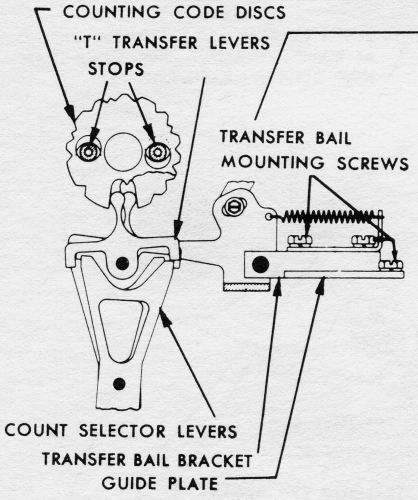

32 TRANSFER BAIL BRACKET

Requirement – Position the first and third from the rear count selector levers to left, and the second and fourth to the right. Move left end of transfer bail down until "T" transfer levers position count code discs against their stops. Under this condition, at least one code disc, should be moved clockwise against its stop and at least one code disc, should be moved counter-clockwise against its stop.

To check this requirement, hold a small screwdriver firmly in a count code disc notch and try to move code disc to left or right. If code disc is against its stop, there will be no perceptible rotational play.

To Adjust – Loosen transfer bail bracket mounting screws and position bracket to left or right. Tighten the screws, making certain that the bracket is against guide plate.

33 COUNT SELECTOR BAR ASSEMBLY POSITION

Requirement – With the front (top) counting selector lever to the right and the transfer bail roller on a high part of its cam. Min. .060" – Max. .070" between left end of the front "T" transfer lever and its corresponding count selector lever.

To Adjust — Position the counting selector bar assembly by means of its elongated mounting holes. Then position the stop plate on the counting selector bar assembly so that it touches the base casting and tighten the lock nut. With the stop plate adjusted according to the foregoing, the assembly may be removed and replaced without further adjustments, providing the stop plate is positioned against the casting when remounting the assembly.

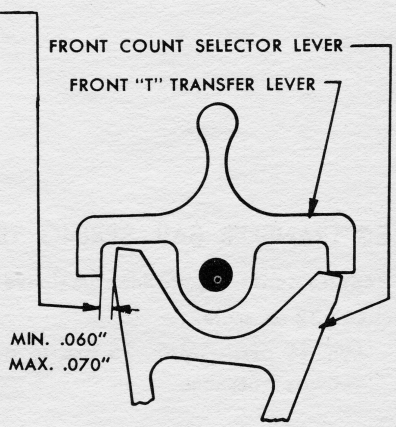

INSTRUCTIONS FOR REMOVING AND REPLACING THE COUNTING SHAFT

Remove the four (85471) screws that mount the two bearing caps (123722) from the rear of the counting shaft. The counting shaft pulls apart where worm shaft slips through washer and into sleeve at center of drive arm.

Remove pilot screw (6814) in reset collar lever (86215). Loosen set screw (6807) which holds zero lever shaft (3248) in place and withdraw shaft.

Release clutch, rotate main shaft forward until reset collar is to extreme rear of its travel. Then turn set collar (86090)—and shaft—to slip reset collar off bottom pivot pin in reset collar. Entire worm shaft can then be pulled to rear far enough to apply new garter spring over the end of the worm shaft assembly. Or, if desired by a little twisting and maneuvering, the entire worm shaft assembly can be completely removed from the Perforator.

Replace the worm shaft so that the stop blade assembly is positioned firmly inside the count index assembly, at the same time the lower pivot screw (6814) of the reset collar lever should fit into the reset collar. Replace the top pivot screw (6814) of the reset collar lever into the reset collar. Replace zero lever spring.

The rear section of the counting shaft should be replaced so that the drive arm fits into the start disc. Be sure the felt washer is in between these two parts.

Replace zero lever shaft (3248) and tighten set screw (6807). Replace the two bearing caps (123722) and mounting screws (85471).

Check the following:

Counting Shaft End play Adjustment.

34 TRANSFER BAIL ARM

Requirement — The first and third from rear count selector levers to left, and second and forth to right, rotate main shaft until transfer bail roller rests on a high part of its cam. Hook a 12 lb. scale over transfer bail roller shoulder screw nut and pull at right angles to transfer bail arm with a pull of 10 lbs. There should be some clearance not more than .006" between each cam peak and roller.

To Adjust — Loosen transfer bail arm clamping screw and position the arm.

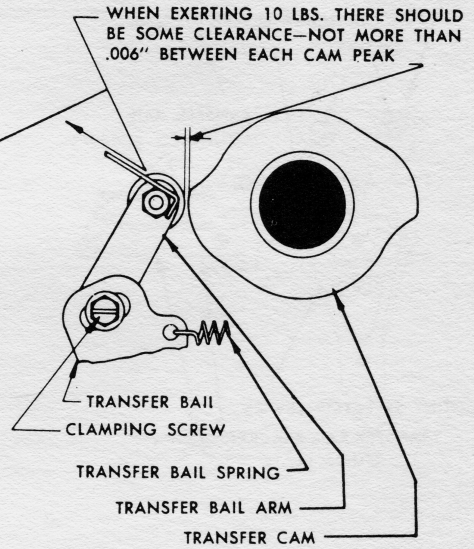

35 TRANSFER BAIL SPRING TENSION

Requirement – Operating cam sleeve in stop position.

Use 32 oz. scale.

Min. 19 ozs. – Max. 25 ozs. to adjust start roller moving away from cam.

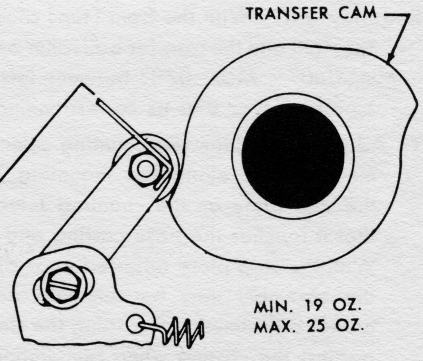

36 COUNTING SHAFT END PLAY

Requirement – No perceptible end play.

To Adjust – Loosen two bearing cap mounting screws and position rear section of counting shaft.

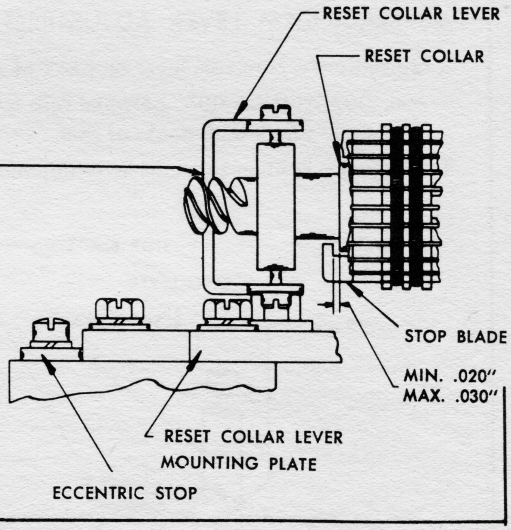

37 RESET COLLAR LEVER

Requirement – Reset collar lever roller on high part of cam. Play taken up in collar and lever for maximum clearance.

Min. .020" – Max. .030" between all stop blades and the rear side of reset collar. Check both peaks of cam.

To Adjust – Back off eccentric stop and mounting plate screws and position plate.

NOTE: When play in collar is taken up in the minimum direction, check for some clearance.

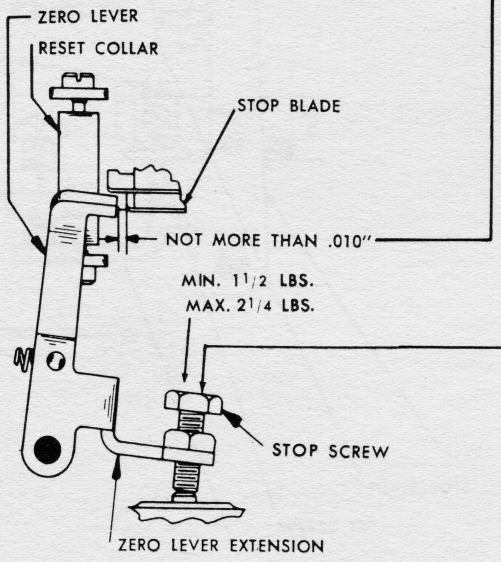

38 ZERO LEVER STOP SCREW

Requirement — With the stop blade that is in front of the zero lever in its forward detent position and the zero lever held in its forward position, there should be some clearance, not more than .010" between the front end of the zero lever and the stop blade. Check each stop blade for this same clearance.

To Adjust – Position zero lever stop screw.

39 ZERO LEVER SPRING TENSION

Requirement – Zero cam lever on low part of cam. Push down on stop screw.

Use 12 lb. scale.

Min. 1½ lbs. – Max. 2¼ lbs. to start zero lever moving.

40 ZERO CAM LEVER ADJUSTING SCREW

Requirement – Zero cam lever on peak of cam.

Min. .002" – Max. .006" between zero lever stop screw and its stop. Check both peaks of cam.

To Adjust – Position zero cam lever adjusting screw.

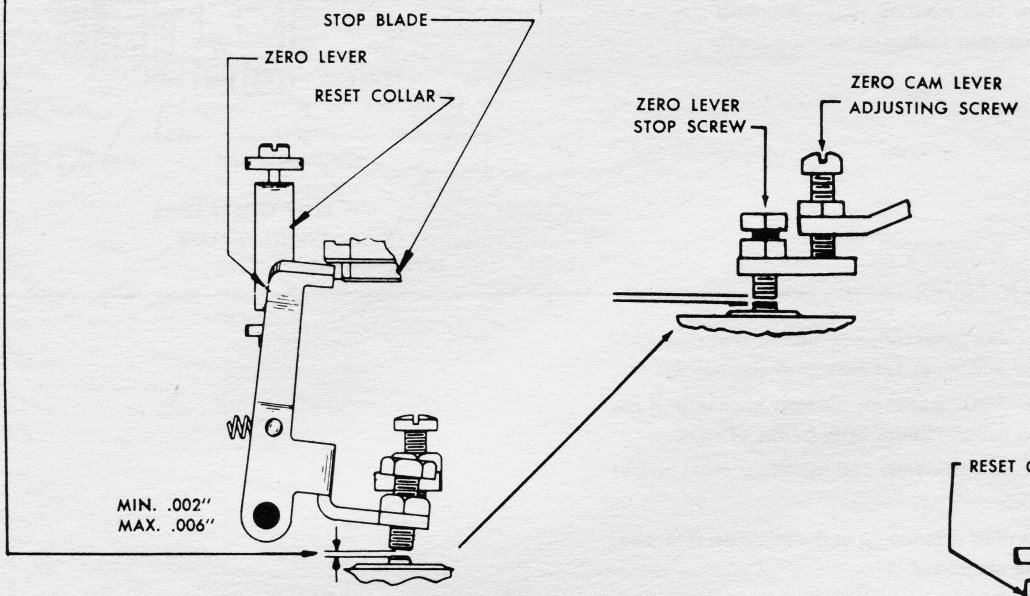

41 ZERO LEVER UPSTOP SCREW

Requirement – Zero cam lever on low part of cam.

Min. .015" – Max. .025" between zero lever and stop blades (in rear position).

To Adjust – Position zero lever upstop screw with set screw loosened.

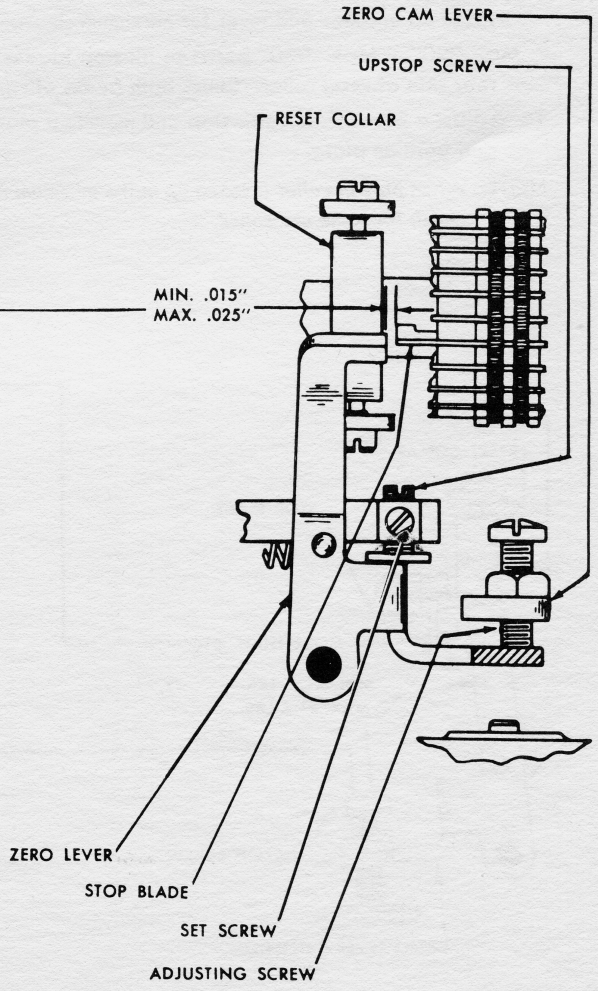

42 STOP PIN SPRING TENSION

Requirement – Stop pin in selected position. Hook scale on stop pin, front of center guide disc.

Use 32 oz. scale.

Min. 6 ozs – Max. 10 ozs. to start each pin moving.

43 LEFT COUNTING CROSS SHAFT

Requirement – (a) There should be a minimum amount of play (without binding) between left counting cross shaft gear and counting shaft worm gear. Check for one complete revolution of shaft. The shaft should also be free in its bearings without any tendency to bind.

Requirement – (b) The counting shaft friction drive arm and reset collar lever (with the reset collar in its extreme rear position) should both clear left counting cross shaft gear by at least .010".

To Adjust– Loosen left counting cross shaft left bearing bracket mounting screw and position bracket.

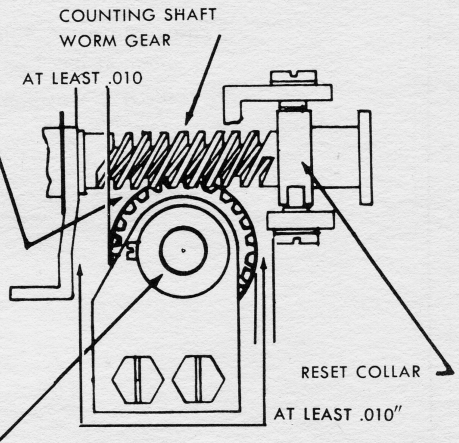

44 LEFT COUNTING CROSS SHAFT END PLAY

Requirement – Left counting cross shaft should have some end play, not more than .004".

To Adjust – Loosen set screw in collar mounted on the left end of shaft and position collar.

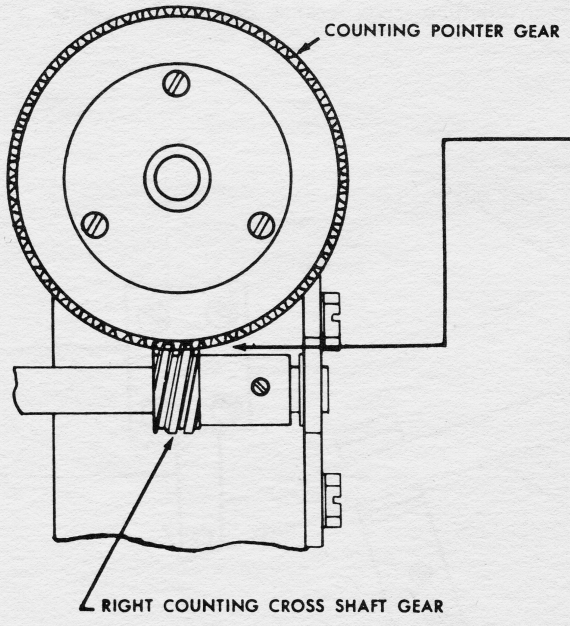

45 RIGHT COUNTING CROSS SHAFT

Requirement – Minimum amount of play without binding between the shaft worm and the counting pointer gear. Try one complete revolution of the gear.

To Adjust – Position the height of the right end bearing bracket of the right counting cross shaft by means of its elongated mounting holes.

46 RIGHT COUNTING CROSS SHAFT END PLAY

Requirement – Right counting cross shaft should have some end play, not more than .004".

To Adjust– Position the collars located on either side of the left bearing by means of their set screws.

47 RETURN SOLENOID DOWNSTOP

Requirement — Solenoid link downstop positioned 2 3/16" from base casting. The solenoid link bail should make full contact with the solenoid link downstop.

To Adjust — Position downstop link by means of its stop screws.

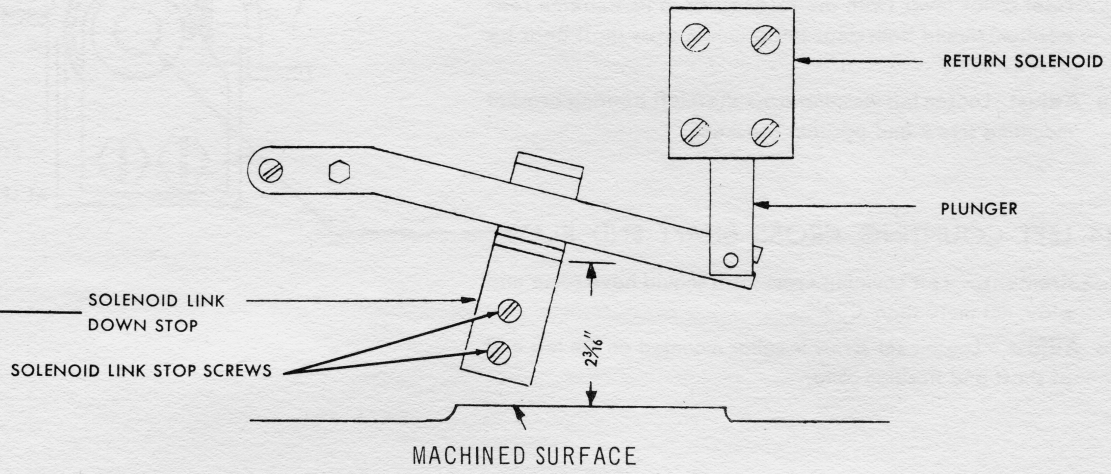

48 COUNTING CLUTCH RELEASE LEVER ADJUSTMENT SCREW

Requirement — Return solenoid in de-energized position.
Min. .010" — Max. .025" between clutch release lever adjusting screw and release plunger.

To Adjust — Loosen clutch release lever adjusting screw locknut, and position adjusting screw.

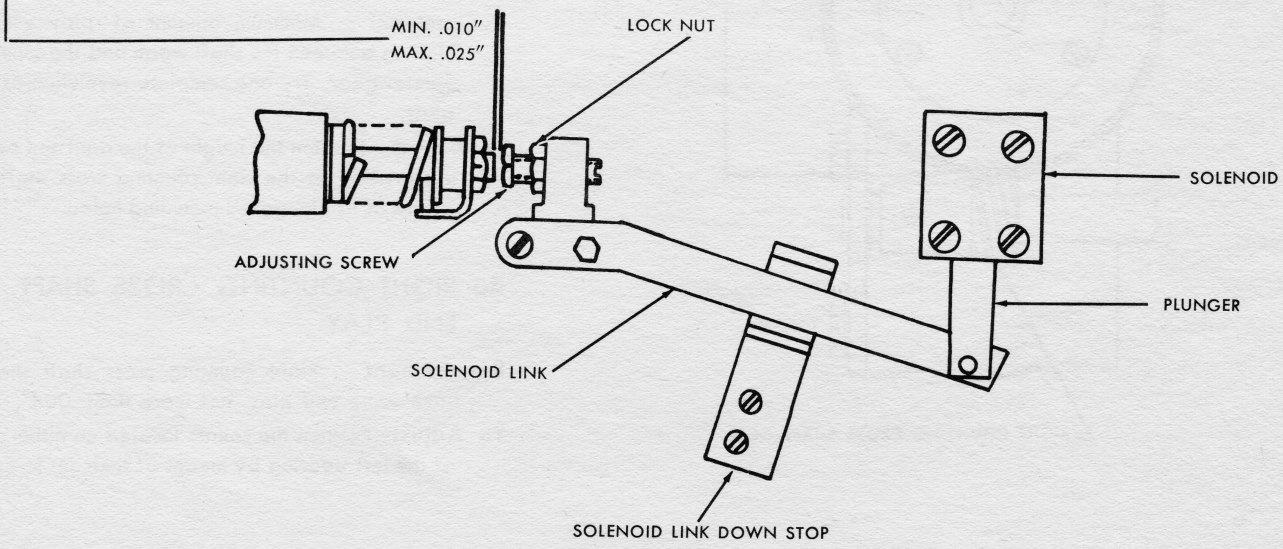

49 RETURN SOLENOID LINK UPSTOP

Requirement — Counting Pointer backstop in extreme left position counting pointer in extreme right position and return solenoid link stop screws position tight.

To Adjust — move solenoid link bail manually upward until the counting pointer returns to left end of scale. Tighten return solenoid link stop screws. The solenoid link bail should make full contact with the solenoid upstop in "up" position; also "down" position.

NOTE: Recheck counting clutch release lever adjusting screws adjustment. Recheck return solenoid downstop.

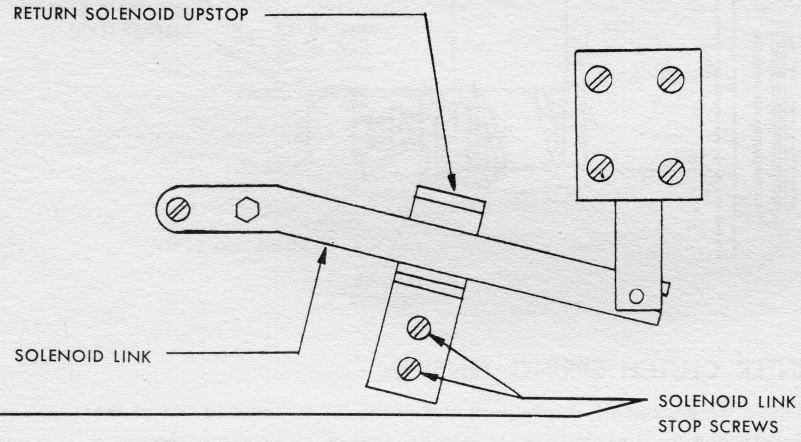

50 RETURN SOLENOID (Final Adjustment)

NOTE: This is a "blind" adjustment.

Requirement — Return solenoid link bail against its upstop and solenoid plunger held in the upward position.

Min. 010" — Max. .030" between solenoid plunger and solenoid coil stop when return solenoid link bail is against its upstop and the solenoid plunger is free from binds.

To Adjust — Loosen solenoid mounting screws and move solenoid up or down.

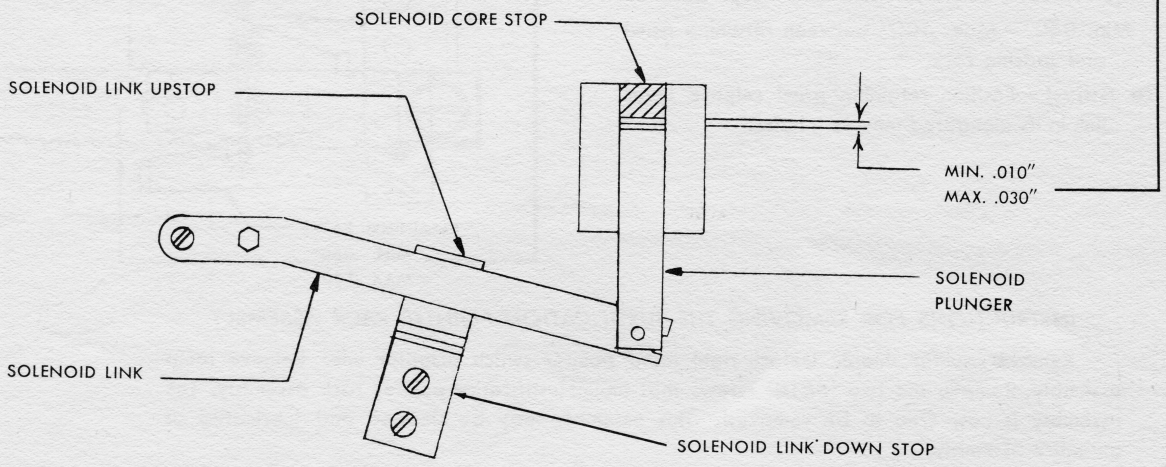

51 COUNTING POINTER CLUTCH SPRING COMPRESSION

Requirement–Return solenoid de-energized, matrix counting pointer moved to right end of scale.

Use 12 lbs. scale.

Min. 10 lbs. – Max. 12 lbs. to release pointer.

To Adiust – Hold adjusting collar with a wrench, and loosen lock nut on release plunger. Then with a wrench, applied to flats at rear end of the plunger, rotate plunger clockwise to increase tension or counter-clockwise to decrease tension.

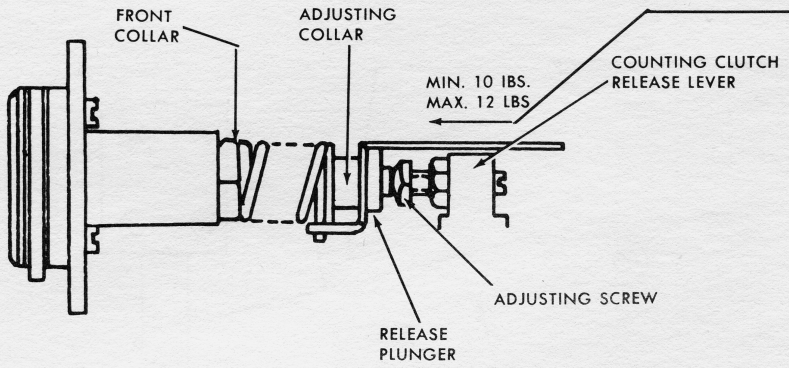

52 COUNTING POINTER CLUTCH SPRING TENSION

Requirement – Return solenoid de-energized, apply push end of the 12 lb. scale to end of the lug on spring stop. (Rotate stop counter–clockwise to increase tension, clockwise to decrease spring tension.) At a pressure of 3 to 3 1/2 lbs. tighten lock nut tightly enough to hold this pressure requirement. Hold adjusting collar with a wrench and make final tightening of lock nut.

Recheck this adjustment by applying the push end of a 12 lb. scale to the end of spring which engages spring stop. It should require 3 to 3 1/2 lbs. to start spring moving away from spring stop.

Recheck counting pointer clutch spring compression.

53 RETAINING PAWL RELEASE LEVER

Requirement – Return solenoid link in "up" position.

Min. .060" – Max. .100" between retaining pawl and spacing rack.

To Adjust – Position retaining pawl release lever link in its elongated mounting holes.

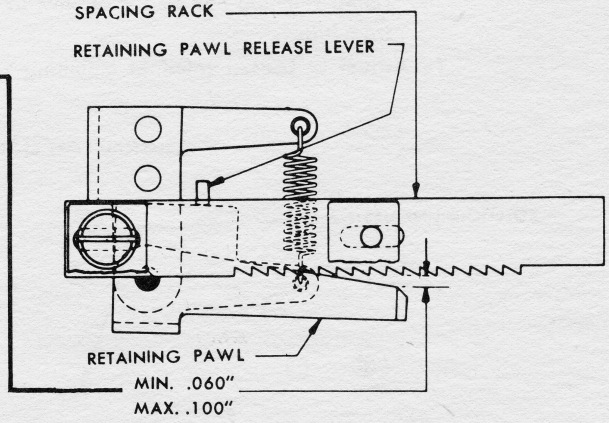

INSTRUCTIONS FOR REMOVING THE JUSTIFICATION POINTER RACK ASSEMBLY

Remove counter shield. Detach right hand pointer switch actuator link. Remove lamp assembly. Remove the two (6810) screws that mount justification pointer rack assembly. The assembly is now free to be removed. This assembly may be cleaned and lubricated as an entire assembly.

54 SPACING RACK

Spaceband justification rack removed.

Requirement–Spacing rack in returned position, there should be some clearance not more than .004", between retaining pawl and second full tooth (third notch) on spacing rack. Check to see that pawl does not bind on point of tooth as it is withdrawn.

To Adjust – Loosen spacing rack clamping screw and position rack.

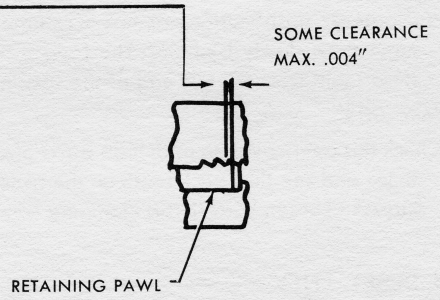

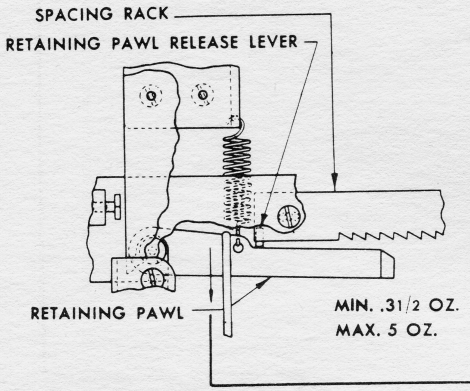

55 RETAINING PAWL SPRING TENSION

Spaceband justification rack removed.

Requirement – Spacing rack in return position.

Use 8 oz. scale.

Min. $3\frac{1}{2}$ ozs. – Max. 5 ozs. to start pawl moving..

56 LEFT JUSTIFICATION POINTER RETURNED POSITION

Requirement – Spaceband pointers in returned position, there should be some clearance not more than .010" between ends of pointers.

To Adjust – Position left hand pointer by means of clamping screw which fastens the left hand pointer to the gear segment.

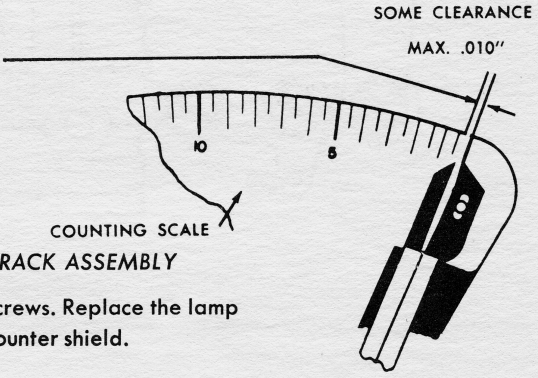

INSTRUCTIONS FOR REPLACING THE JUSTIFICATION POINTER RACK ASSEMBLY

Replace the justification pointer rack assembly with the two (6810) screws. Replace the lamp assembly. Connect the right hand pointer switch actuator link. Replace counter shield.

Check the following adjustments:

Retaining pawl release lever.
Spacing rack.

57 COUNTING POINTER RETURN SPRING ARM POSITION

Requirement – Counting pointer against right hand stop. Length of counting pointer return cord should be such that spring arm is $\frac{1}{16}$" to $\frac{3}{16}$" away from spring post.

58 COUNTING POINTER RETURN SPRING TENSION

Requirement – Counting Pointer approximately in center of scale.

Use 8 oz. scale.

Min. 3 ozs. – Max. 5 ozs. to start arm moving.

59 SPACER ROD

Requirement – Justification pointers in returned position, depress space bar keylever and rotate main shaft slowly by hand. The feed pawl should engage the spacing rack and cause the third tooth from the left end of the spacing rack to overtravel retaining pawl.

Min. .004" – Max. .012".

Check this overtravel on both high parts of cam. Rotate shaft and depress space bar twelve times and see that each tooth on the spacing rack overtravels the retaining pawl.

To Adjust –Loosen spacer rod clamping screws and adjust length of spacer rod.

60 RESET LUG

Requirement – With spacer bail roller on a high part of cam, intermediate pawl should overtravel latching surface of its latch.

Min. .004" – Max. .020".

Check for this same overtravel with spacer bail roller on opposite high part of cam.

To Adjust – Loosen reset lug mounting screws and position the lug.

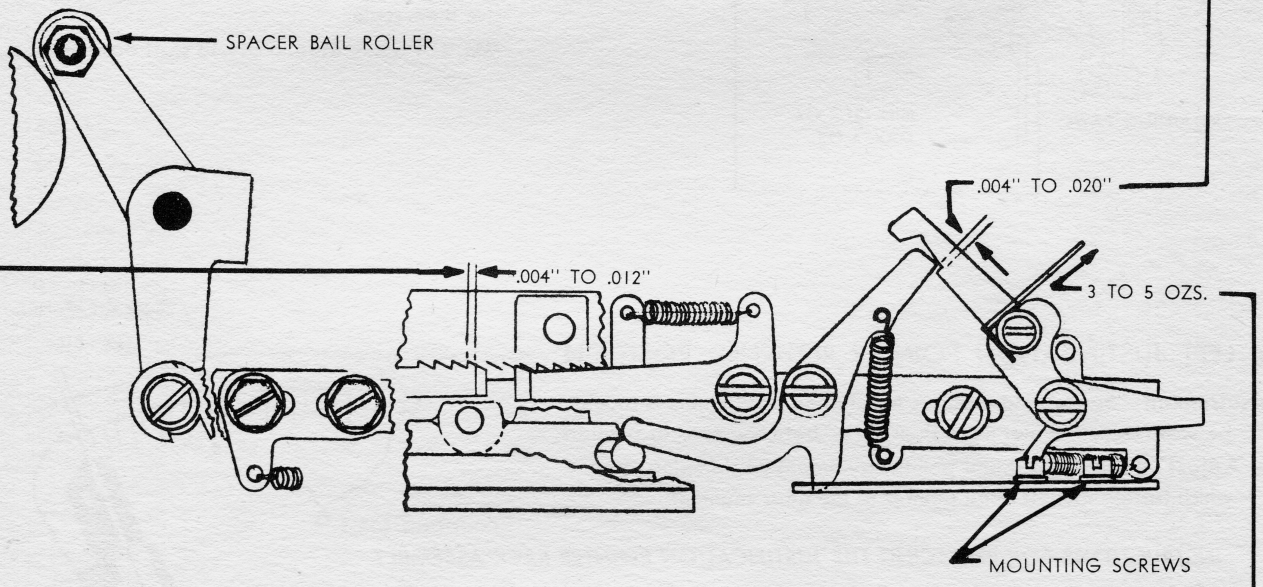

61 INTERMEDIATE PAWL LATCH SPRING TENSION

Requirement – With spacer bail roller on high part of cam.

Use 8 oz. scale.

Min. 3 ozs. – Max. 5 ozs. to start latch moving.

62 INTERMEDIATE PAWL LATCH

Requirement – Operating cam sleeve in its stop position, depress space bar slowly. The intermediate pawl should release at the same time or slightly before operating cam sleeve jaw clutch stop lever is released.

To Adjust – Loosen intermediate pawl latch clamping screw and position latch.

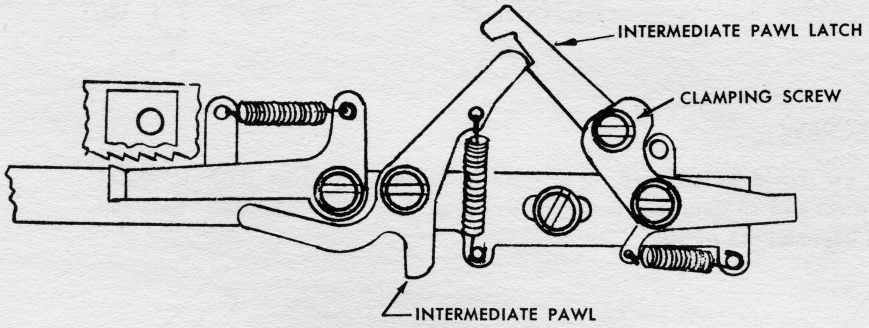

63 SPACE BAR LEVER EXTENSION GUIDE PLATE

Requirement – Spacer bail roller on a high part of its cam, depress space bar to its stops.

Min. .020" – Max. .030" between end of intermediate pawl latch arm and space bar lever extension. Check both high parts of cam.

To Adjust – Loosen guide plate mounting screws and position guide plate.

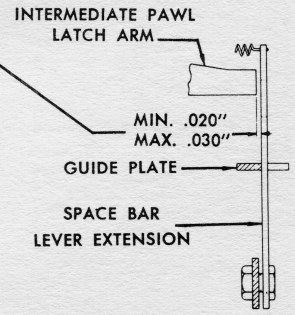

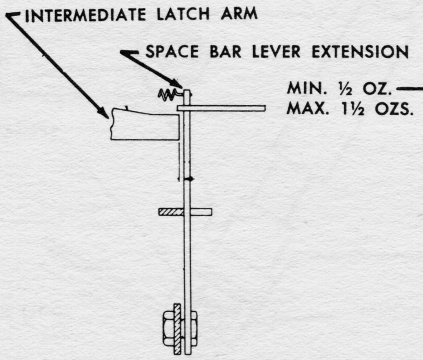

64 SPACE BAR LEVER EXTENSION SPRING TENSION

Requirement – Operating cam sleeve in its stop position.

Use 8 oz. scale.

Min. 1/2 oz. – Max. 1 1/2 ozs. to start extension moving.

65 INTERMEDIATE PAWL SPRING TENSION

Requirement – Spacer bail roller on high part of cam, intermediate pawl latch held away.

Use 8 oz. scale.

Min. 3 ozs. – Max. 5 ozs. to start pawl moving.

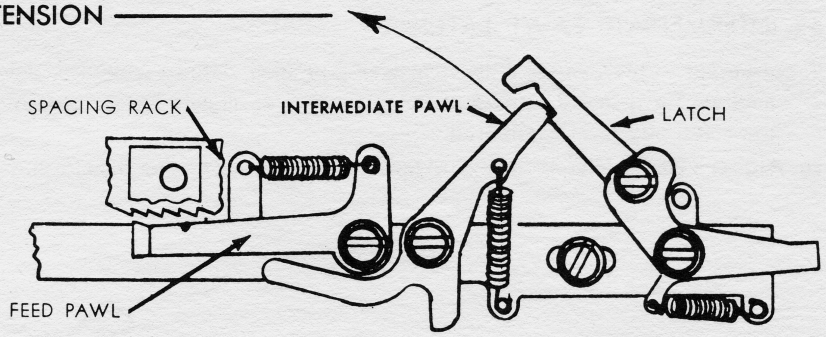

66 ECCENTRIC SCREW

The eccentric screw should be adjusted to provide a clearance of from .020" to .050" between feed pawl and spacing rack and a clearance of from .020" to .060" between feed pawl and intermediate pawl.

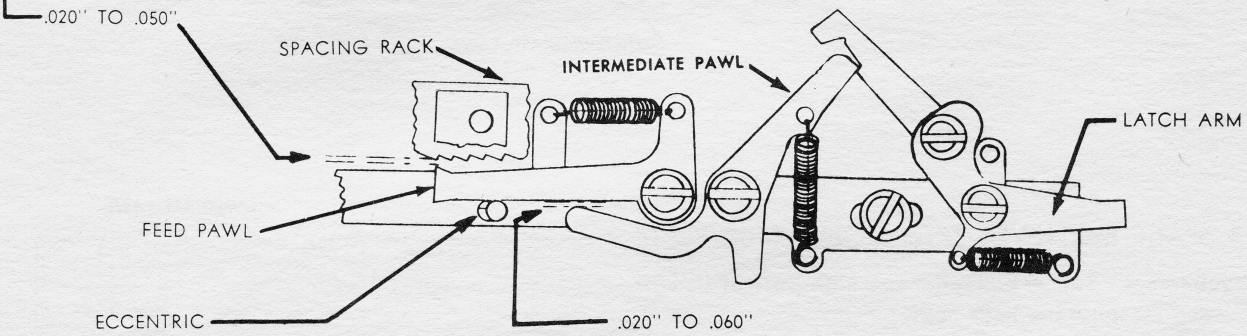

67 PIVOT ADJUSTING BLOCK SCREWS FRICTION

Requirement – Pivot adjusting blocks near center of their screws.

Use 32 oz. scale.

Min. 20 ozs. – Max. 30 ozs. to start each adjusting screw turning.

To Adjust – Loosen hexagonal nut screw and position nut.

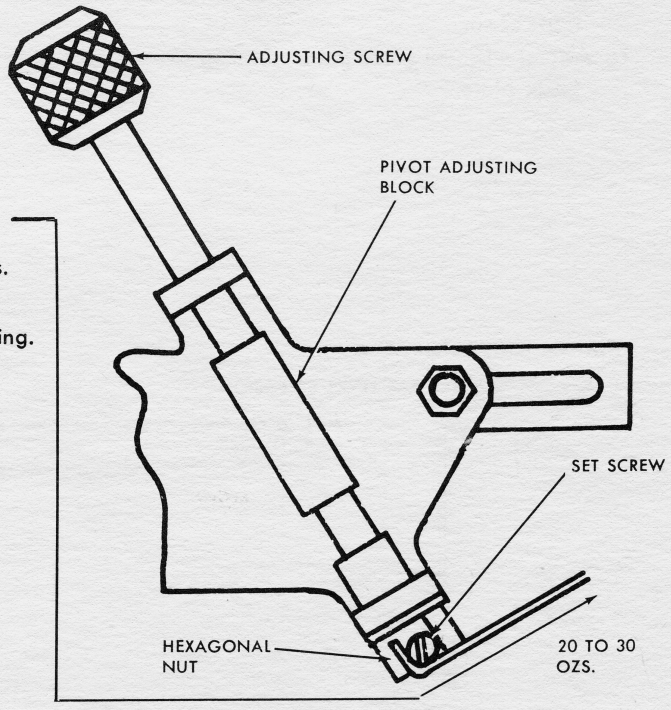

68 SPACING FEED PAWL SPRING TENSION

Requirement – Intermediate pawl latched.

Use 8 oz. scale.

Min. 1 oz. – Max. 3 ozs. to start feed pawl moving away from vertical extension on intermediate pawl.

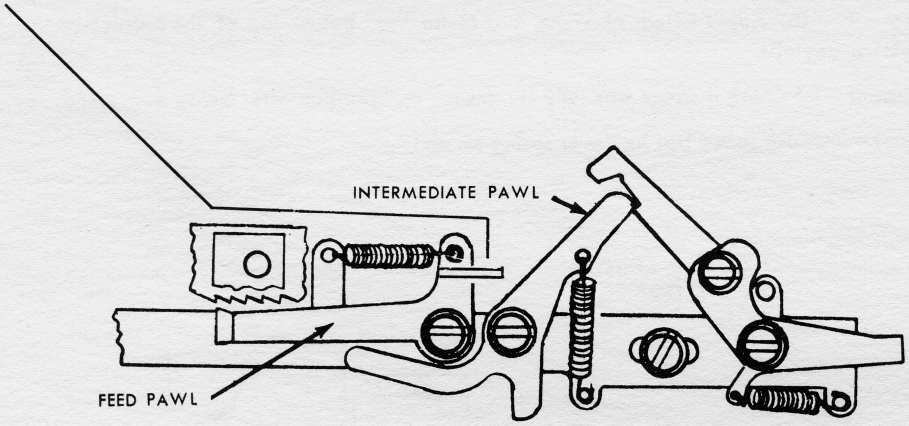

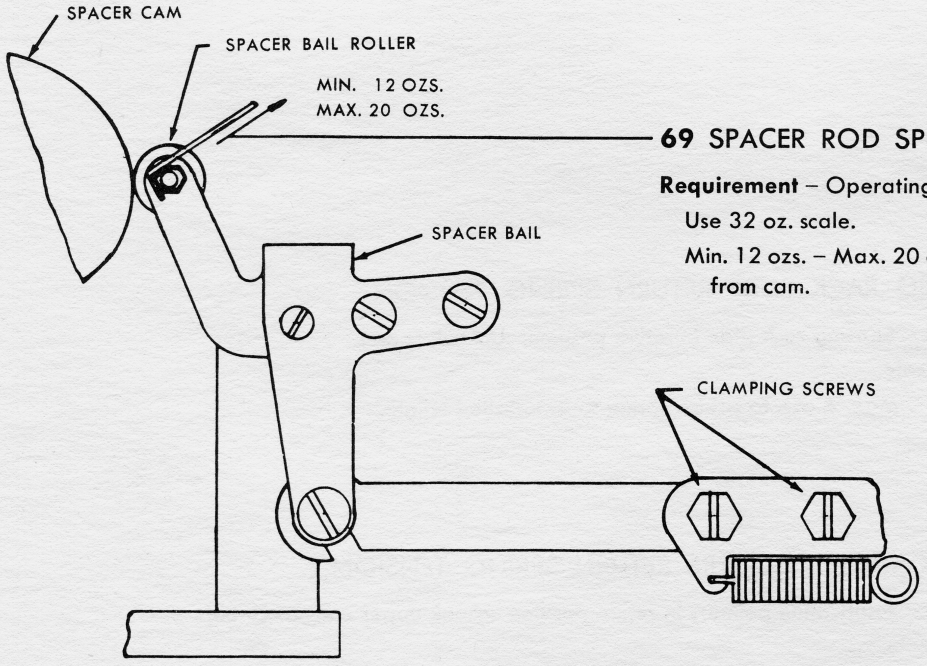

69 SPACER ROD SPRING TENSION

Requirement – Operating cam sleeve in stop position.

Use 32 oz. scale.

Min. 12 ozs. – Max. 20 ozs. to start roller moving away from cam.

70 SPACE BAR STOP

Requirement – (a) Space bar depressed.

Min. .030" – Max. .050" between space bar and stop screws with pressure of 2 1/2 lbs. near space bar keylever guide.

To Adjust – Adjust space bar stop screws.

Requirement – (b) Adjust height of space bar to be 7/32" below top of the fourth row keylever keytops.

Requirement – (c) Check if space bar fully returns to "up" position after being depressed.

To Adjust – Increase space bar keylever spring tension.

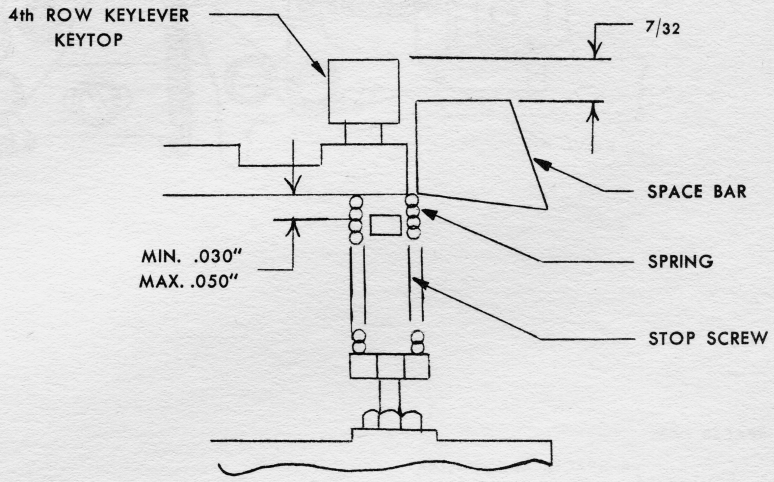

71 SPACING RACK SLIDE RETURN SPRING TENSION

Requirement – Spacing rack slide in return position. Unhook spring.

Use 8 oz. scale.

Min. 4 ozs. – Max. 6 ozs. to stretch spring to its installed length.

72 JUSTIFICATION POINTERS RETURN SPRING TENSION

Requirement – Justification pointers in return position unhook upper ends of springs.

Use 8 oz. scale.

Min. 2 1/2 ozs. – Max. 4 1/2 ozs. pull to installed length for each spring.

73 JUSTIFICATION POINTER SPACING

Requirement – Right justification pointer advanced 12 spaces, the pointer should pass the 11th space division on the scale.

To Adjust – Position the right pivot adjusting block by means of its adjusting knob.

74 ADD-THIN JUSTIFICATION POINTER

Requirement – Add–thin justification pointer advanced 12 spaces, the pointer should pass the 16th space division on the scale.

To Adjust – Position the left pivot adjusting block by means of its adjusting knob.

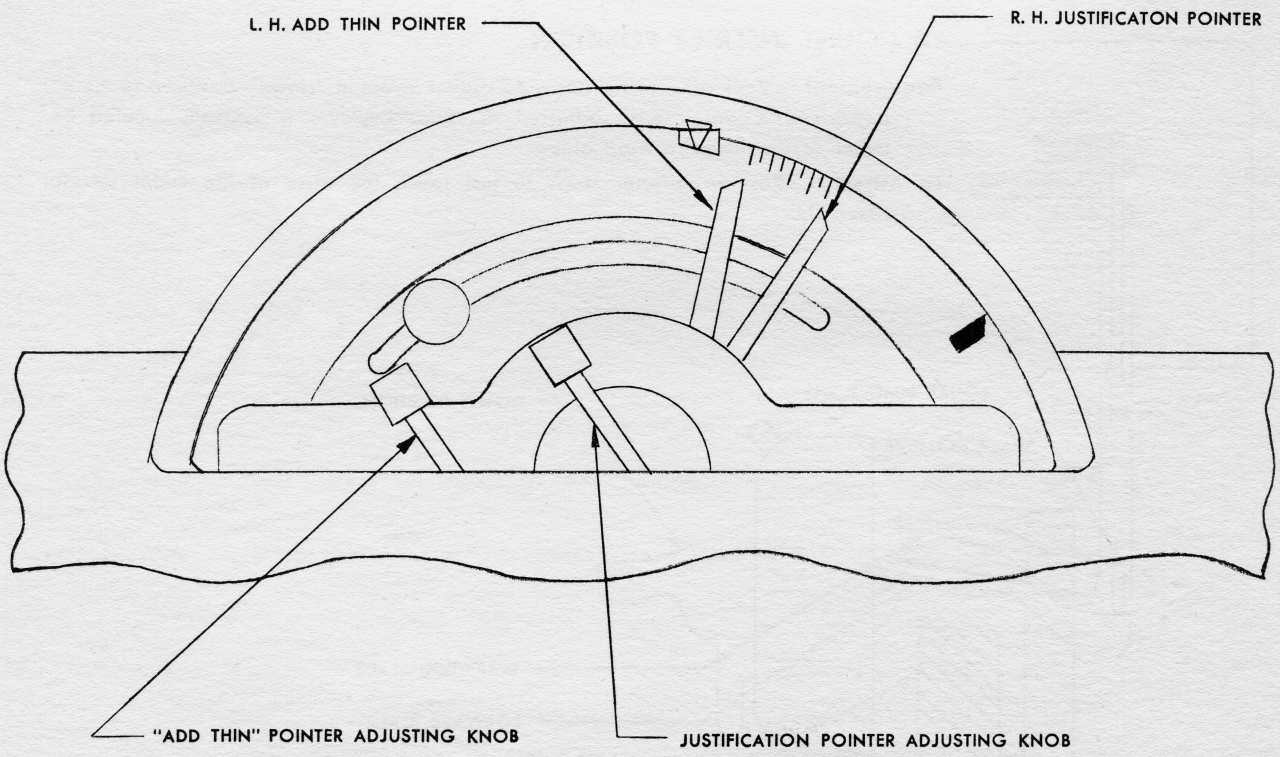

75 COUNT INSERTER DETENT BRACKET

Requirement – All detent levers in "down" position.

Use 64 oz. scale.

Min. 20 ozs. – Max. 40 ozs. to move the detent levers out of detent position.

To Adjust – Position height of detent bracket.

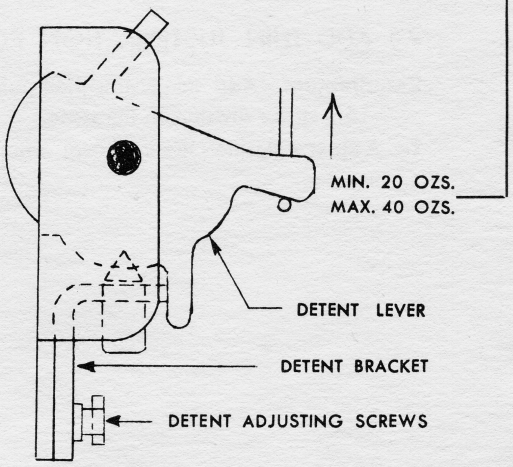

76 COUNT INSERTER POSITION

Requirement — Back off inserter stops. All detent levers in "down" position; space bar depressed. Count inserter adjusted so space keylever is centrally located between forward and rarward blades.

To Adjust — Position inserter stops to just touch the base of the count selector assembly.

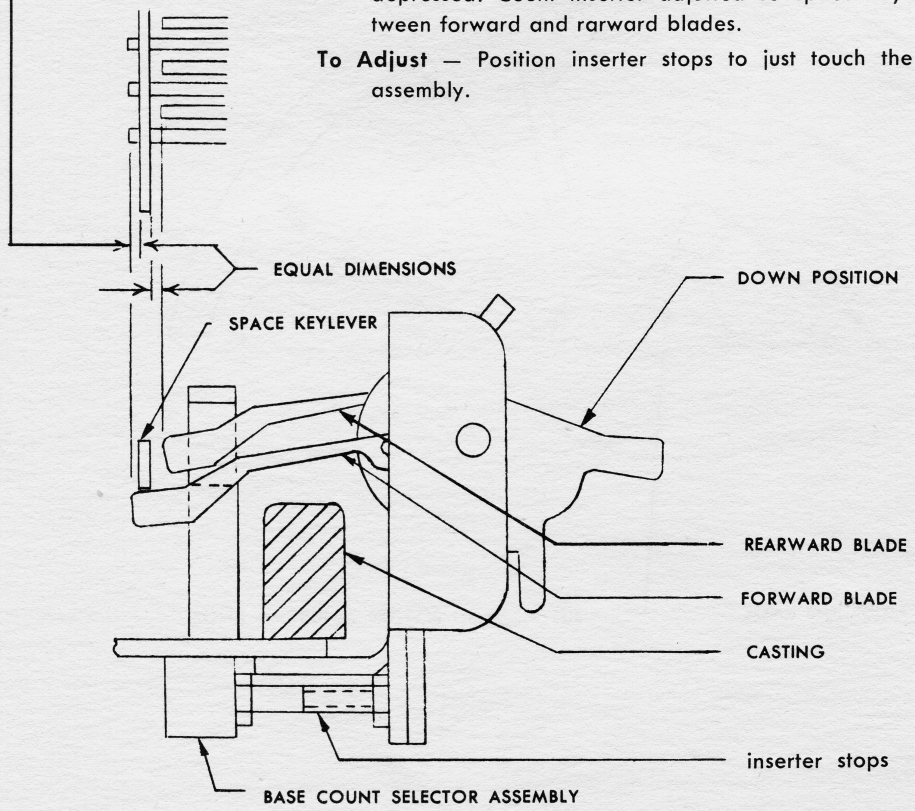

77 KEYLEVER OPERATING SWITCHES

NOTE: 1. To check this adjustment it will be necessary to remake it.

2. Whenever the Trip-off point adjustment is remade, the "keylever operated switches" adjustments have to be remade.

Requirement – Loosen switch screws, depress respective keylevers. Switches should "make" simultaneously or slightly before the electric clutch switch and centrally engage the switch plunger.

To Adjust – Position switches to keylevers, tighten screws.

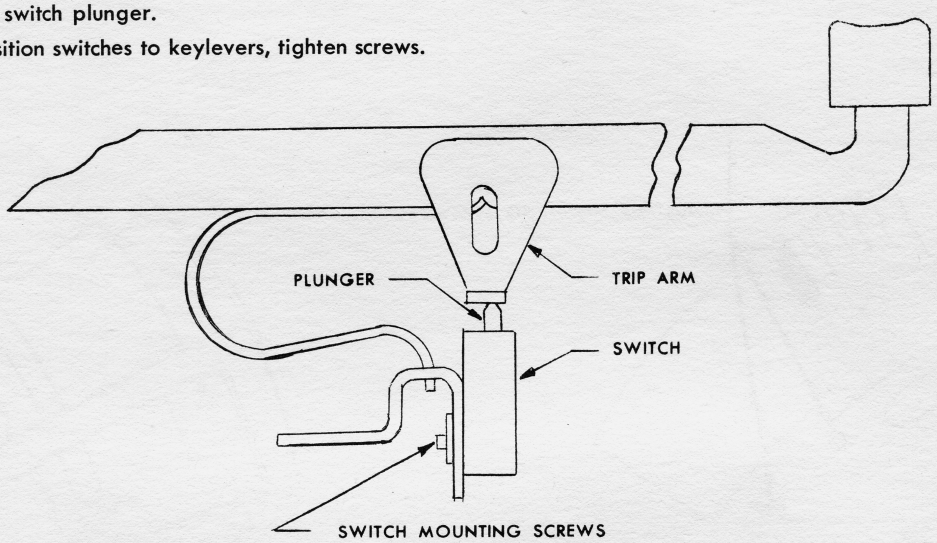

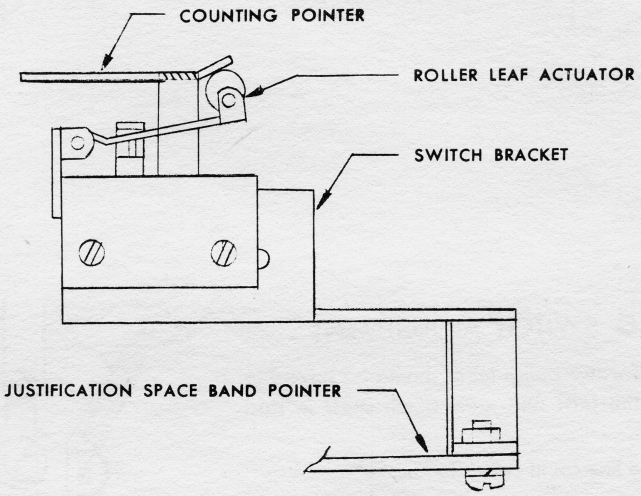

78 JUSTIFICATION SWITCH

Requirement – Justification light should go "ON" when counting pointer approaches right-hand pointer within 2 scale divisions.

To Adjust – Position switch with mounting screws loosened. Tighten screws.

79 TIGHT LINE LOCKOUT AND BUZZER SWITCH

Requirement.– Both switches to "make" in unison when counting pointer reaches "zero" position.

To Adjust – Position clamping screw and position two-switch assembly.

Requirement – Buzzer switch to have maximum sound.

To Adjust – Bend vibrator spring.

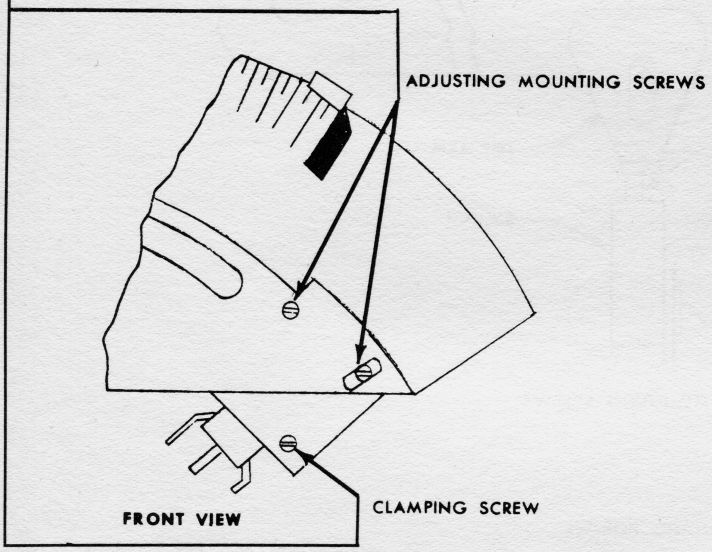

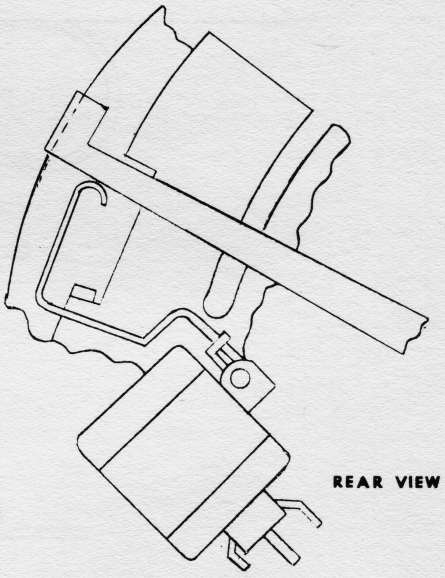

80 LINE COUNTING SWITCH ADJUSTMENT

Requirement– The perforator punch lever should be turned to "On" position (to the left) and main clutch shaft in stop position.

To Adjust – Position the line count switch to "make".

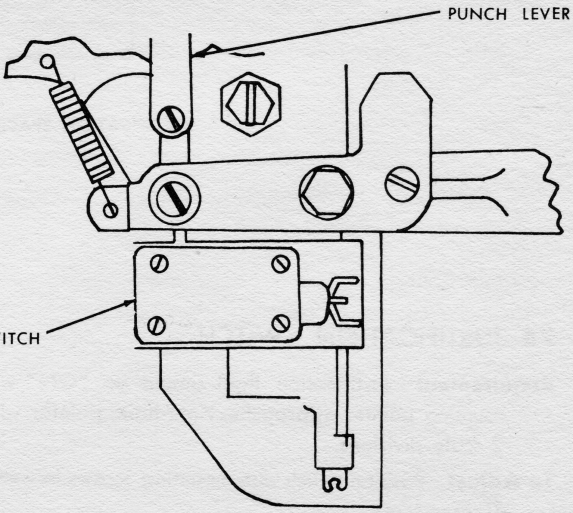

81 PUNCH UNIT

Requirement – The punch hammer operating lever roller should ride fully on cam and the roller screw should clear bail bracket (unoperated position).

Min. .025" – Max. .060" clearance between upper edges of front and rear selector bar links and tops of slots in their respective punch bar levers.

NOTE: In mounting punch unit, see that clearance between front selector bar link and its punch bar lever is approximately equal (within 1/64") to clearance between rear selector link and its punch bar lever.

To Adjust–Loosen punch unit bracket and locating plate mounting screws and position bracket. Then position the locating plate securely against bracket.

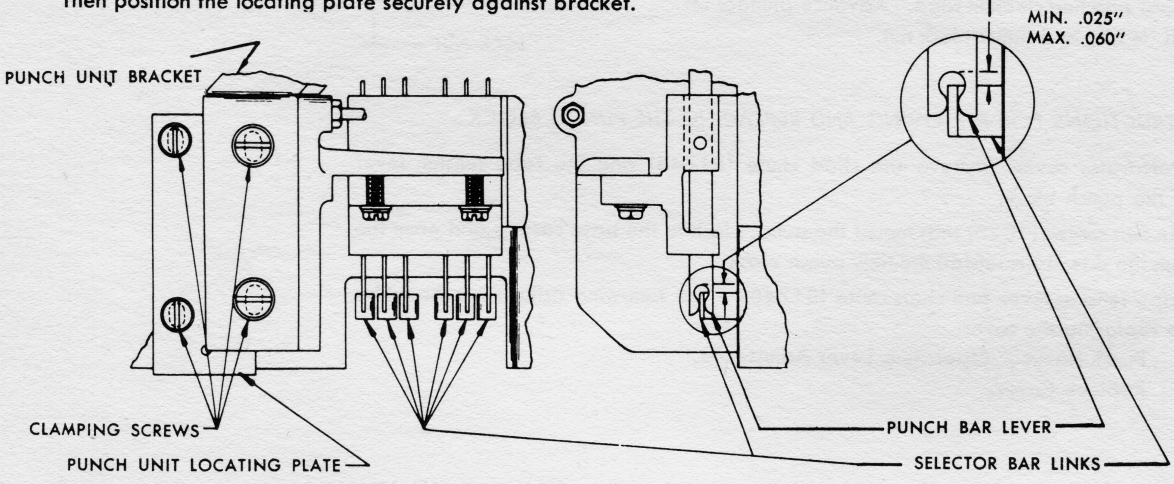

82 PUNCH HAMMER PIVOT SCREWS

Requirement – Punch hammer in its lower (unoperated) position punch bars should line up under their respective punches when viewed from left end of Perforator. Some end play, not more than .004".

To Adjust – Loosen punch hammer pivot screws lock nuts and position pivot screws.

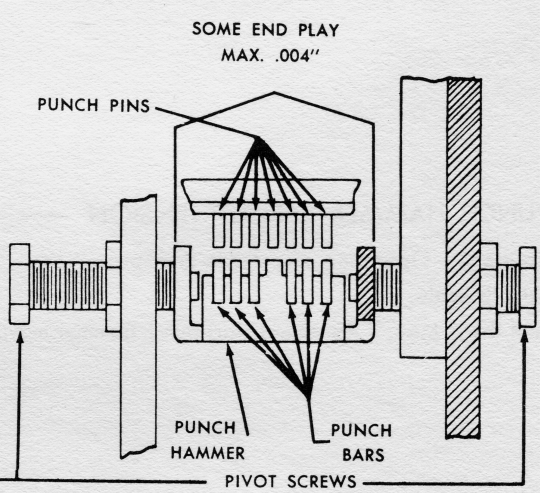

INSTRUCTIONS FOR REMOVING AND REPLACING THE PUNCH UNIT ASSEMBLY

Before removing the punch unit be sure to note if the assembly is positioned against the locating plate. If the assembly is not positioned properly then it will be necessary to remake all punch unit adjustments after replacing punch unit assembly. Remove line counter switch. Remove the two mounting screws that position the punch unit assembly to the Perforator base. By slightly twisting to the front, the entire assembly may be removed.

Replace the punch unit assembly being sure that the punch levers are positioned over the selector bar links and that the punch unit assembly is positioned within the locating plate attached to the base casting.

Check the following:

Punch unit adjustment.

83 PUNCH HAMMER OPERATING LEVER

NOTE: To check this adjustment, it will be necessary to remake it.

To Adjust – Loosen punch hammer stop screw lock nut and back off screw. Connect power cord to proper power supply. With the punch control lever in the "ON" position (to left) and with tape inserted in the punch block, operate the "RUBOUT" keylever. Loosen punch hammer operating lever adjustable plunger lock nut and back off plunger until there is a failure of perforations in the tape. Continue to operate the "RUBOUT" keylever and advance plunger until all holes are just punched clean in tape. Advance plunger an additional 1/4 turn and tighten lock nut.

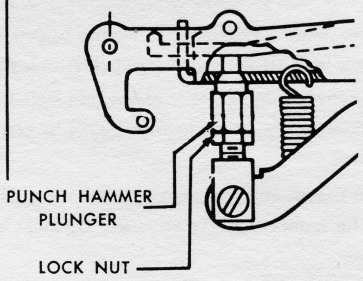

INSTRUCTIONS FOR REMOVING AND REPLACING THE PUNCH BLOCK

Remove Perforator cover. Remove the chad chute (81748) and the tape tension lever assembly from the punch block.

Remove the two screws (1026) that mount the punch block to the base casting and ease the punch block from the dowels, re-install the new punch block.

Replace tape tension lever and chad chute (81748). The following adjustment should be checked before replacing the cover:

Punch Hammer Operating Lever Adjustment.
Replace Cover.

84 PUNCH HAMMER SPRING TENSION

Requirement – Operating cam sleeve in stop position.

Use 12 lb. scale.

Min. 4 lbs. – Max. 7 lbs. to just start punch hammer moving.

85 PUNCH HAMMER STOP SCREW

Requirement – Operating cam sleeve in stop position and punch control lever in "ON" position, (to left) there should be some clearance, not more than .006", between punch hammer stop screw and punch hammer.

To Adjust – Loosen punch hammer stop screw lock nut and position stop screw.

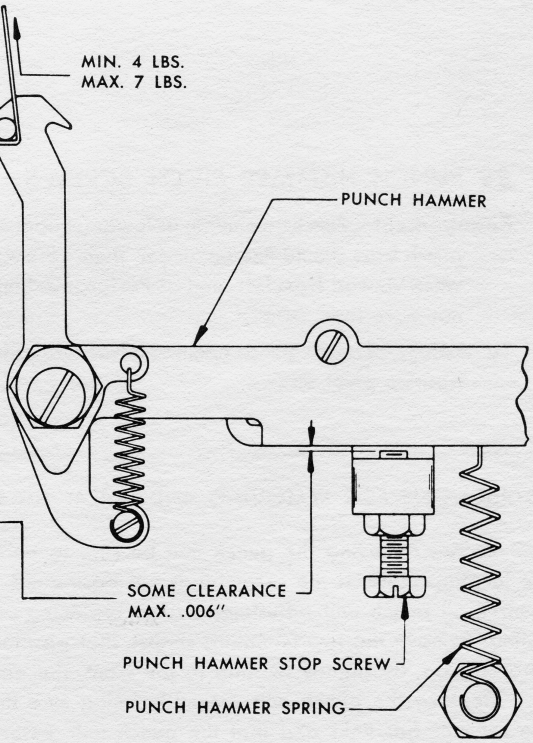

86 PUNCH BAR LEVERS BEARING BRACKET

Requirement – With three fingers of the right hand, hold depressed "R", "Y", and "5" keylevers in such a manner that the three keylevers lock each other. (This may be checked by observing that the right or left edges of the six punch bar levers are aligned.) Under this condition, right edges of the projections of punch bars should align with left edges of the punch pins. This may be checked mechanically as follows: Set up the foregoing condition and trip main clutch by manually lifting left end of stop lever latch. If adjustment is correct at least one and not more than two code perforations should be perforated on each side of feed hole.

To Adjust – Loosen punch bar levers bearing bracket mounting screws and position the bracket.

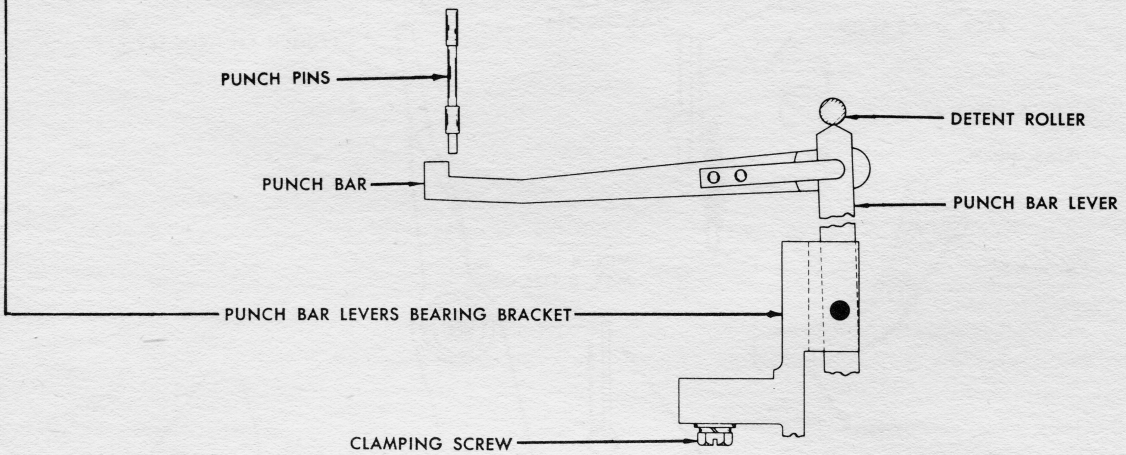

87 PUNCH BAR LEVER DETENT

Requirement – Center punch bar lever detent roller over the six punch bar levers, detent bracket should have some end play not more than .020".

To Adjust – Position detent bracket by two pivot screws.

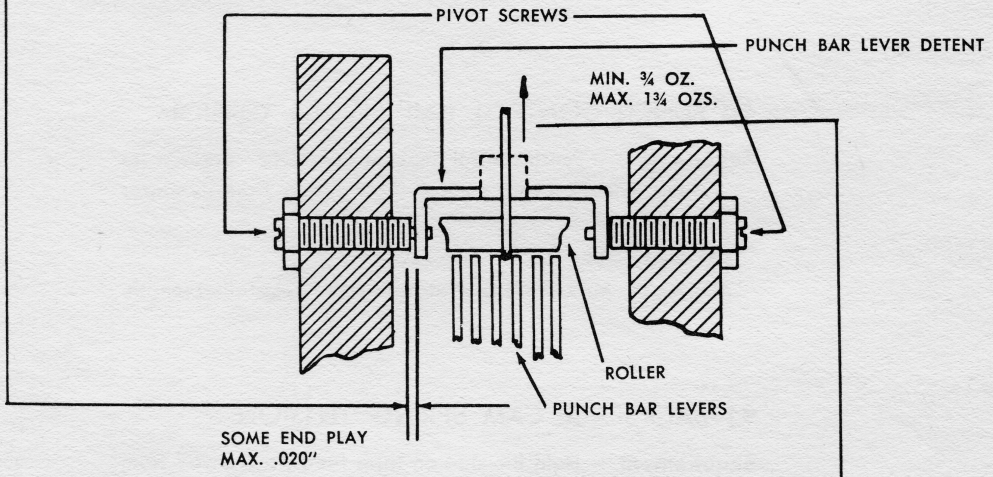

88 PUNCH BAR LEVERS DETENT SPRING TENSION

Requirement – Hold the "Rubout" keylever fully depressed.

Use 8 oz. scale.

Min. 3/4 oz. – Max. 1 3/4 ozs. to start detent moving.

89 BACKSPACE PAWL SPRING TENSION

Use 8 oz. scale

Min. 1 oz. – Max. 1 1/2 ozs. to start pawl moving away from its stop.

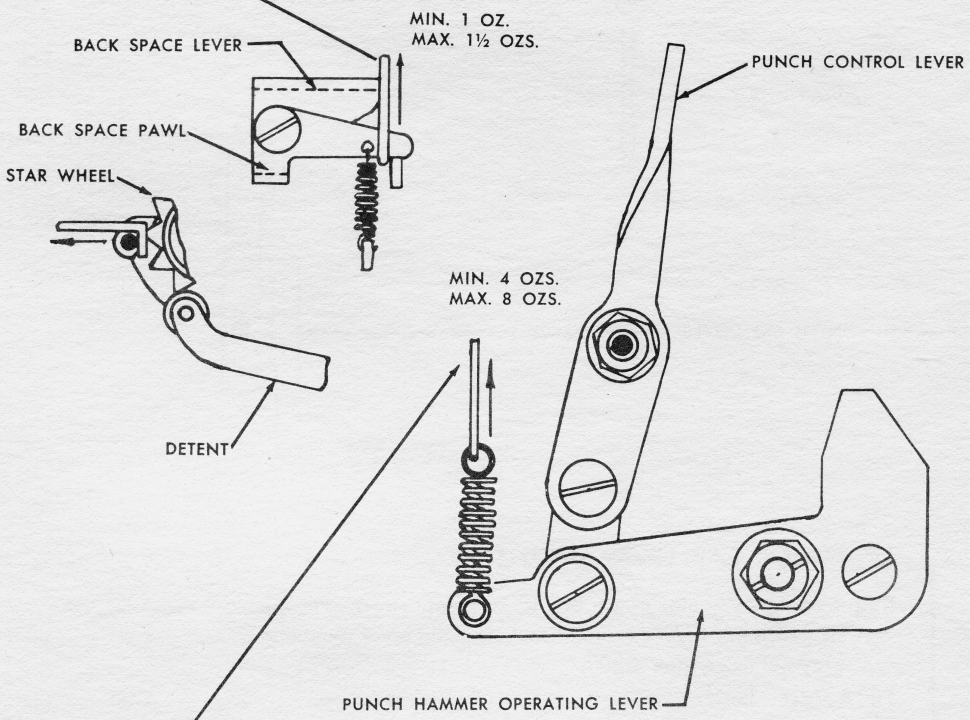

90 PUNCH CONTROL BAIL SPRING TENSION

Requirement – Punch control lever in the "OFF" position (to right), unhook punch control lever spring from its upper spring post.

Use 8 oz. scale.

Min. 4 ozs.–Max. 8 ozs. to stretch spring to its installed length.

91 BACKSPACE CAM SPRING TENSION

Requirement – Hold the stud on tape feed pawl away from backspace cam. Refer to page 8 for location.

Use 8 oz. scale.

Min. 3 ozs. – Max. 5 ozs. to start cam moving.

92 TAPE FEED ROLL BEARING PLATE

Requirement – Feed roll should rotate freely when feed pawl, tape tension lever, and feed roll detent lever are held away from feed roll.

To Adjust – Loosen bearing plate mounting screws and position plate.

93 TAPE STRIPPER PLATE

Requirement – Some clearance not more than .010" between upper edge of tape stripper plate and feed roll. Try one complete revolution of feed roll.

To Adjust – Loosen tape stripper plate mounting screws and position plate.

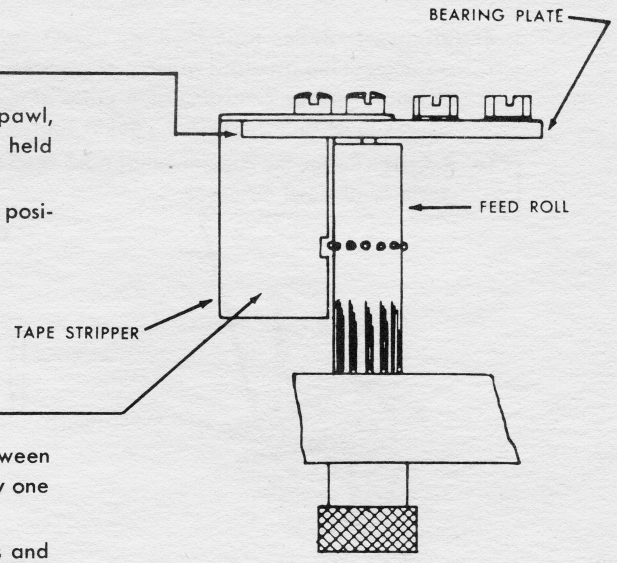

94 TAPE FEED PAWL

Requirement – Main shaft rotated until selected punch bars just touch ends of punches. Tape feed pawl should engage a tooth on feed roll ratchet without overtravel.

To Adjust – Loosen feed pawl eccentric mounting nut and screw and position feed pawl by means of the eccentric. (Large part of eccentric to the left.)

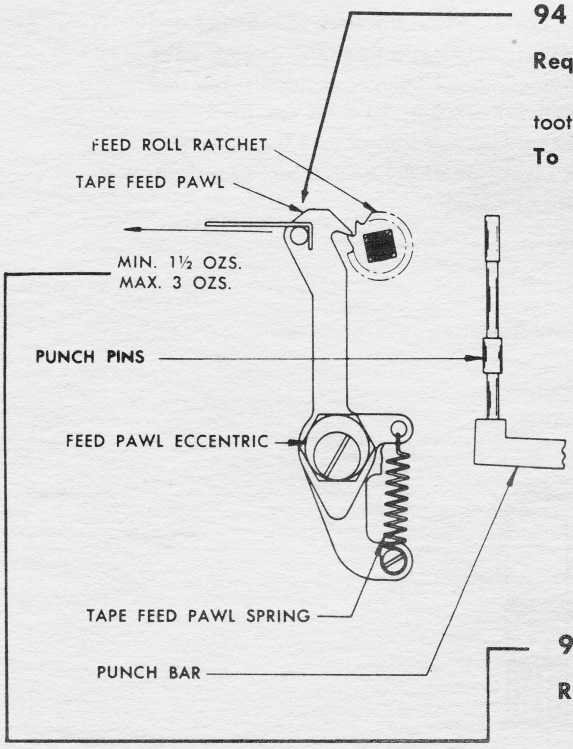

95 TAPE FEED PAWL SPRING TENSION

Requirement – Cam sleeve in stop position.

Use 8 oz. scale.

Min. 1 1/2 ozs. – Max. 3 ozs. to start pawl moving away from tape feed roll.

96 TAPE FEED ROLL DETENT FINAL

Requirement – Refine tape feed roll detent adjustment if necessary so that the perforations in tape meet the standard spacing of ten holes to the inch. This may be checked by perforating a length of tape consisting of a series of nine "blanks" (tape key) followed by a "Rubout" combination and checking it against tape gauge (catalog No. 2215).

To Adjust – Refine the adjustment of tape feed roll detent by means of its eccentric and recheck tape feed pawl adjustment.

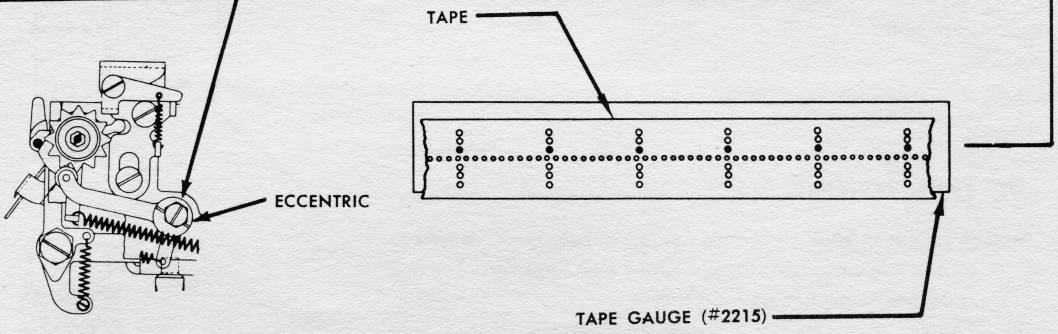

INSTRUCTIONS FOR INSTALLING AND ADJUSTING FEED PAWL

BACKSPACE DEFLECTING PLATE (NO. 132063)

Attach feed pawl backspace deflecting plate (No. 132063) to punch assembly with knife screws.

To Adjust — If necessary, move deflecting plate either up or down to meet following requirements.

Perforator punch lever turned to "ON" position and main clutch shaft in stop position — there should be a minimum of clearance between each tooth of the feed roll ratchet and the engaging edge of the feed pawl, when each tooth is held opposite the engaging edge of the feed pawl. If this clearance cannot be maintained, some contact is permissible, but should not interfere with the backspacing of the feed roll ratchet. Turn on the perforator motor, strike the rubout keylever and depress the repeat key. The tape should be perforated uniformly with the rubout combination, and for each revolution of the perforator main shaft, the feed roll ratchet should be observed to advance one tooth.

97 TAPE TENSION LEVER SPRING TENSION

Use 8 oz. scale.

Min. 5 ozs. – Max. 5 1/2 ozs. to start lever moving away from tape feed roll.

To Adjust – Loosen tape tension lever shaft lock nut and rotate shaft clock-wise to increase tension or counter-clockwise to decrease tension.

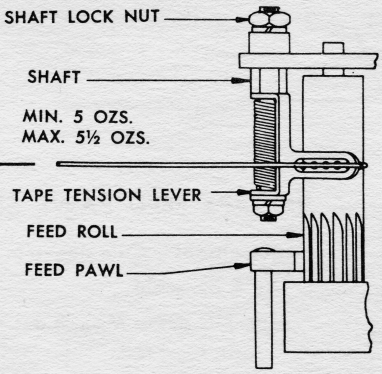

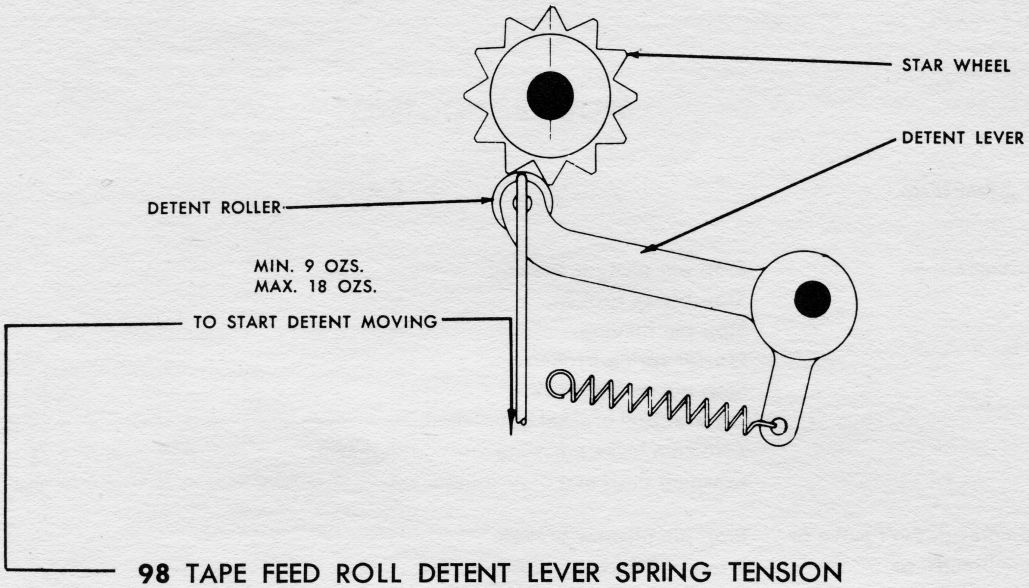

98 TAPE FEED ROLL DETENT LEVER SPRING TENSION

Requirement – Detent roller between two teeth on star wheel.

Use 32 oz. scale.

Min. 9 ozs. – Max. 18 ozs. to start the roller moving away from star wheel.

99 TAPE GUIDE

Requirement – The tape guide should be parallel to top casting and as far to right as possible.

To Adjust – Loosen tape guide mounting screws and position guide.

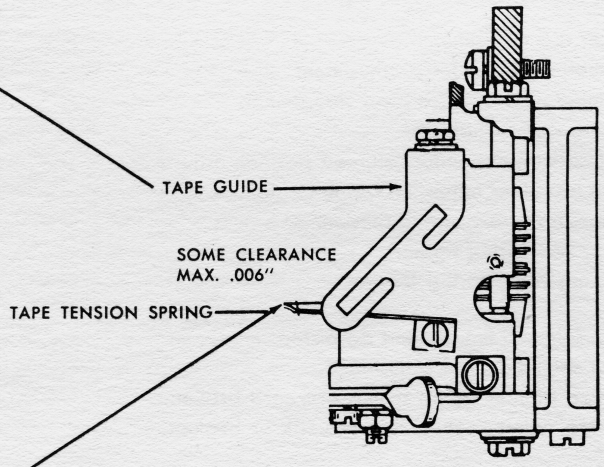

100 TAPE TENSION SPRING

Requirement – Some clearance, not more than .006" between spring and plate over which tape rides.

To Adjust – Loosen tape tension spring mounting screw and position spring.

TROUBLE SHOOTING

SYMPTOM	CAUSE	ADJUSTMENT NO.
Counting pointer spins	Stop pin plunger broken.	
	Stop blade broken.	
	Stop pin binding.	
	Garter spring broken.	
	Stop pin spring weak.	
	Transfer bail bracket adjustment.	**32**
	Zero cam lever adjusting screw adjustment.	**40**
	Counting shaft end play adjustment.	**36**
Counting pointer doesn't move or moves intermittently or counts incorrectly.	Stop pin plunger broken.	
	Transfer bail bracket adjustment.	**32**
	Transfer bail arm adjustment.	**34**
	Zero lever upstop screw adjustment.	**41**
	Reset collar lever adjustment.	**37**
	Left counting cross shaft adjustment.	**43**
	Count inserter position.	**76**
	Count inserter detent bracket.	**75**
Counting pointer counts same unit value each time.	Transfer bail arm adjustment.	**34**
Counting pointer slips.	Counting shaft friction clutch torque adjustment.	**13**
	Counting pointer clutch spring compression adjustment.	**51**
	Counting pointer broken. (Segments)	
Spaceband justification pointers fail to operate.	Spacer rod adjustment.	**59**
	Intermediate pawl latch adjustment.	**62**
	Retaining pawl release lever adjustment.	**53**
	Spacing rack adjustment.	**54**
	Left justification pointer returned position adjustment.	**56**
	Space bar lever extension spring tension.	**64**
	Intermediate pawl spring tension.	**65**
	Spacer rod spring tension	**69**
	Retaining pawl spring tension.	**55**
Counting pointer fails to return.	Return solenoid link up and downstop.	**49**
	Return solenoid final adjustment.	**50**
	Counting pointer return spring arm cord broken.	
	Counting pointer return spring weak or broken.	

TROUBLE SHOOTING

SYMPTOM	CAUSE	ADJUSTMENT NO.
Counting pointer fails to move on first key stroke.	Excessive gear backlash.	
	Left and right cross shafts end play..	44, 46
	Pointer release plunger front and rear collars play (should be minimum).	
Tape fails to perforate properly.	Punch hammer operating lever adjustment.	83
	Punch block cutting ability poor (should be replaced with a new or reconditioned block).	
	Chads backed up into chad chute.	
	Punch bar levers bearing bracket adjustment.	86
	Punch hammer pivot screws adjustment.	82
	Tape feed pawl adjustment.	94
Tape fails to feed or does not feed properly.	Tape feed roll detent final adjustment.	96
	Tape tension lever spring tension.	97
	Tape feed roll bearing plate adjustment.	92
	Punch hammer operating lever adjustment.	83
	Punch hammer stop screw adjustment.	85
	Punch hammer spring tension.	84
	Tape feed pawl spring tension.	95
	Tape feed roll detent lever spring tension.	98
	Tape binds in tape container.	
	Roll of tape inserted upside down.	
Tape weaves.	Tape tension spring adjustment.	100
Main clutch and keyboard failure, timing off, heavy touch, lockups, etc.	Universal bar downstop screw.	20
	Clutch trip contact gap.	21
	Clutch trip contact spring tension.	21
	Universal bar backstop screw adjustment.	23
	Variable touch spring adjustment.	25
	Clutch trip contact overtravel.	22
	Stop lever latch adjusting screw adjustment.	19
	Stop lever cam roller eccentric screw adjustment.	17
	Stop lever latch upstop screw adjustment.	27
	Selector bar assembly parts binding or dirty (clean periodically).	
	Stop lever and stop lever latch binding.	
	Operating cam sleeve friction clutch adjustment.	14
	Stop lever and stop lever latch spring tensions heavy or weak.	15, 16
	Trip mechanism adjustment.	26
	Stop lever latching extension or non-repeat latch have burrs.	
	Keylever spring tension weak.	9
	Count selector bar assembly adjustment.	1
	Perforator selector bar assembly adjustment.	2

TROUBLE SHOOTING

SYMPTOM	CAUSE	ADJUSTMENT NO.
Keystroke doubles.	Worn edges on stop lever, stop lever latch, or non-repeat latch. (Worn parts should be replaced.)	
Spaceband pointer fails to return.	Retaining pawl release lever adjustment.	53
	Reset lug adjustment.	60
	Justification pointer return spring tension.	72
	Spacing rack slide return spring tension.	71
	Intermediate pawl latch spring tension.	61
	Return solenoid preliminary adjustment	47
	Counting clutch release adjustment screw.	48
	Return solenoid up and downstop adjustment.	49
	Return solenoid final adjustment.	50
Perforator fails to shift or unshift correctly.	Counting selector bar assembly shims adjustment.	1
	Shift bail adjustment.	4
	Shift bail stop plate adjustment.	5
	Shift solenoid adjustment.	6
	Shift bail balancing spring adjustment.	7
	Keylevers spring tension.	9
	Shift and unshift keylever operated switches.	
Indicator lights fail to operate correctly.	Keylever operating switch adjustment.	77
	Justification switch adjustment.	78
	Switches defective.	
	Bulbs defective.	
Tight line and buzzer switches do not work simultaneously.	Tight line buzzer switch adjustment.	79
Excessive noise or vibration	Motor position adjustment.	10
	Perforator cover not positioned properly.	

LUBRICATION CHART

GENERAL LUBRICATION SPECIFICATIONS

Unless otherwise specified, one or two drops of oil at each of the places indicated (1 to 73 inclusive) will be sufficient. Use oil for lubrication at all of the places listed below, except where the use of grease is specified.

Oil both loops of all helical springs that exert a nominal tension of less than 2½ pounds. Apply grease to both loops of all helical springs that exert a nominal tension of 2½ pounds or more. Apply thin film of grease on all cams and gears.

The following lubricants are suggested for use on all **TELETYPESETTER** equipment:

KS-7470 Oil, Part No. 88970 – 1 Qt.; Part No. 88971 – 1 Gal.
KS-7471 Grease, Part No. 88973 – 1 Lb.

For best operating results the **TELETYPESETTER** Standard Light Touch "1000" Perforator should be thoroughly cleaned and lubricated approximately every month unless otherwise specified. To clean and lubricate individual assemblies the following procedure is recommended:

(a) Remove Perforator cover.
(b) Remove the two screws (8185) that mount the punch unit assembly and remove the punch unit assembly.
(c) Remove the two screws (6810) that mount the justification pointer rack and remove the justification pointer rack.
(d) Remove the two bearing caps (123722) that position the counting shaft.
(e) Remove the rear section of the shaft.
Be sure that the small felt washer and bearing sleeve are removed with the shaft.
(f) Remove the pilot screw (6814) in reset collar lever (86215). Unhook zero lever spring.
Loosen set screw (6807) which holds the zero lever shaft (3248) in place and withdraw shaft. Depress any key (to release clutch) and turn main shaft forward until reset collar is to extreme rear of its travel. Then turn reset collar (86090)–and shaft–to slip reset collar off bottom pivot pin in reset collar. By a little twisting and maneuvering the entire worm shaft assembly can be completely removed from the Perforator.
(g) Remove the two bearing caps (123722) that position the main shaft.
Lift the main shaft out of engagement from its related levers, reinstall roller (85784) and roller (85261) if they came off when the shaft was removed.

The individual parts and assemblies should be cleaned and the excessive oil removed. Carbon tetrachloride or other non-inflammable cleaning fluid may be used for cleaning.

After cleaning and lubricating the assemblies of the Standard Light Touch "1000" Perforator, the procedure for reassembling the Perforator is as follows:

(a) Mount the main shaft and the counting shaft.
(b) Replace bearing caps.

Check the following adjustments:

MAIN CLUTCH ADJUSTMENT

(Operating Cam Sleeve Jaw Clutch Adjustment)

With the operating cam sleeve in the stop position (the driven clutch member fully cammed out of mesh with the driving clutch member), the clutch teeth should be separated by from .006″ to .010″. This clearance may be obtained by loosening the four screws which hold the main shaft bearing caps and adjusting the position of the main shaft to the front or rear.

COUNTING SHAFT END PLAY ADJUSTMENT

The counting shaft should have no perceptible end play. To adjust, position the rear section of the counting shaft by means of the four screws which hold the counting shaft bearing caps.

(c) Replace reset collar lever pilot screw, zero lever shaft (tighten set screw), and rehook spring.
(d) Replace justification pointer rack.
(e) Replace punch unit (position the punch unit bracket securely against the locating plate).
(f) Replace cover.

1. Oil Plug (at rear of shaft) – r
2. Ball Bearings – two places.
3. Pulley Sleeve – oil freely.
4. Operating Clutch Sliding Mem
5. Operating Clutch Felt Washer oil twice weekly.
6. Driven Clutch Cam and Follow
7. Oil Plug (at rear of shaft) – r
8. Ball Bearings – two places.
9. Counting Clutch Felt Washers –
10. Stop Shaft Worm and Gear –
11. Stop Blades – all points of c
12. Stop Pins – all points of conta
13. Code Discs – all points of conta
14. Stop Pin Plungers.
15. Stop Pin Rollers.
16. Oil Cup (at front of unit) – fill

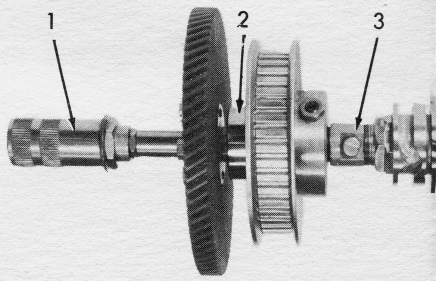

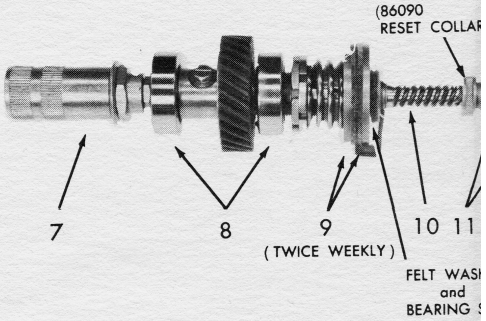

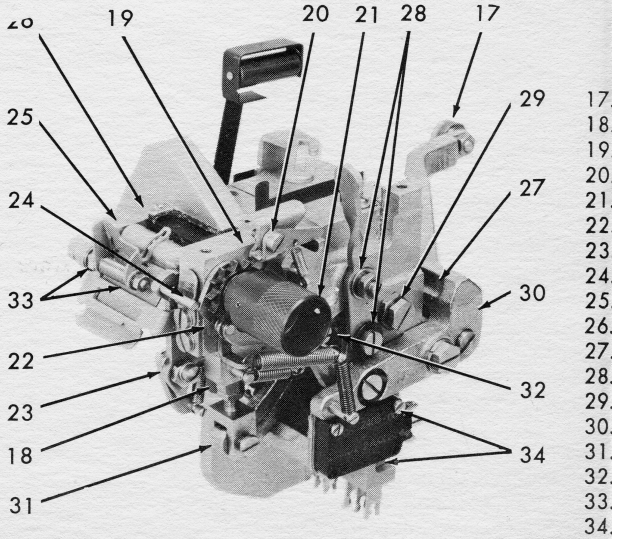

RICATION CHART TTS STANDARD LIGHT

ECIFICATIONS

the places indicated (1 to 73
ne places listed below, except

nsion of less than 2 1/2 pounds.
ert a nominal tension of 2 1/2
gears.
TYPESETTER equipment:
971 – 1 Gal.

1. Oil Plug (at rear of shaft) – remove and fill with oil.
2. Ball Bearings – two places.
3. Pulley Sleeve – oil freely.
4. Operating Clutch Sliding Member – oil freely.
5. Operating Clutch Felt Washers – saturate with oil twice weekly.
6. Driven Clutch Cam and Follower – grease.
7. Oil Plug (at rear of shaft) – remove and fill with oil.
8. Ball Bearings – two places.
9. Counting Clutch Felt Washers – saturate with oil twice weekly.
10. Stop Shaft Worm and Gear – grease.
11. Stop Blades – all points of contact.
12. Stop Pins – all points of contact.
13. Code Discs – all points of contact.
14. Stop Pin Plungers.
15. Stop Pin Rollers.
16. Oil Cup (at front of unit) – fill with oil.

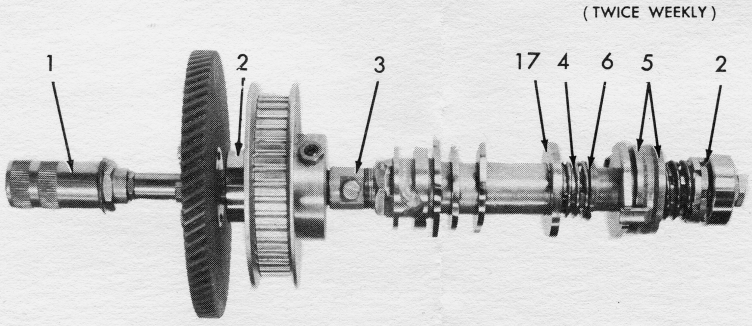

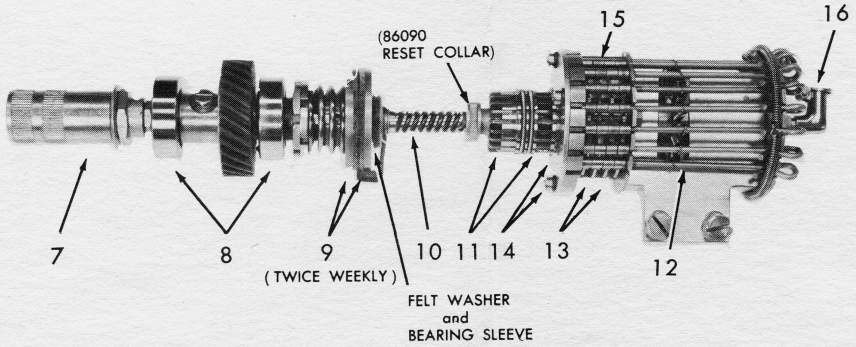

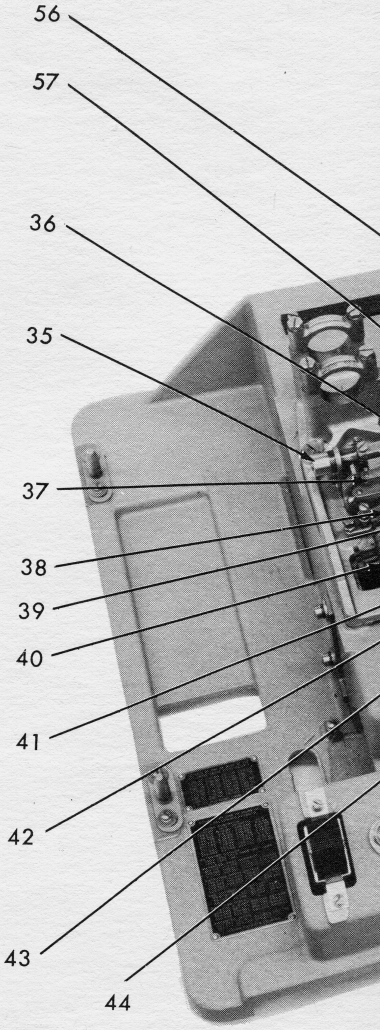

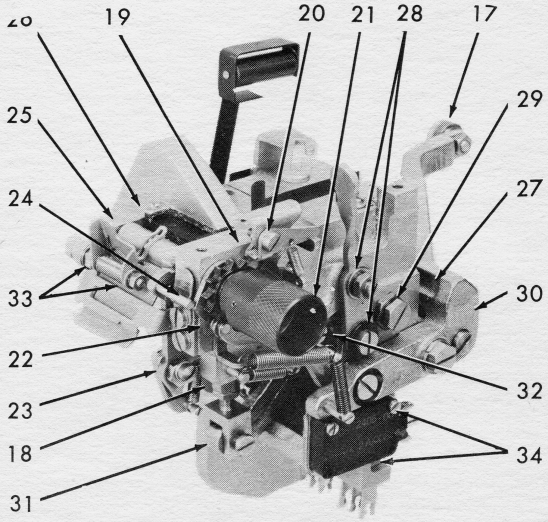

17. Punch Hammer Roller – grease.
18. Punch Hammer Adjusting Nut.
19. Back Space Lever – in the guides.
20. Back Space Pawl at the shoulder screw.
21. Detent Eccentric Bushing.
22. Detent Roller.
23. Feed Pawl Eccentric Bushing.
24. Feed Pawl Release Cam.
25. Feed Roll Bearing.
26. Punch Block Oil Hole.
27. Punch Control Bail Pivots – two places.
28. Punch Control Lever Pivots and Joints.
29. Punch Hammer Bearings – two places (inside).
30. Punch Hammer Lever Shaft – two oil holes.
31. Punch Joint Bearings – two places.
32. Punch Bars – all points of contact.
33. Tape Tension Lever Bearings – two places.
34. Vertical Levers – all points of contact

NDARD LIGHT TOUCH "1000" PERFORATOR

PERFORATOR BASE

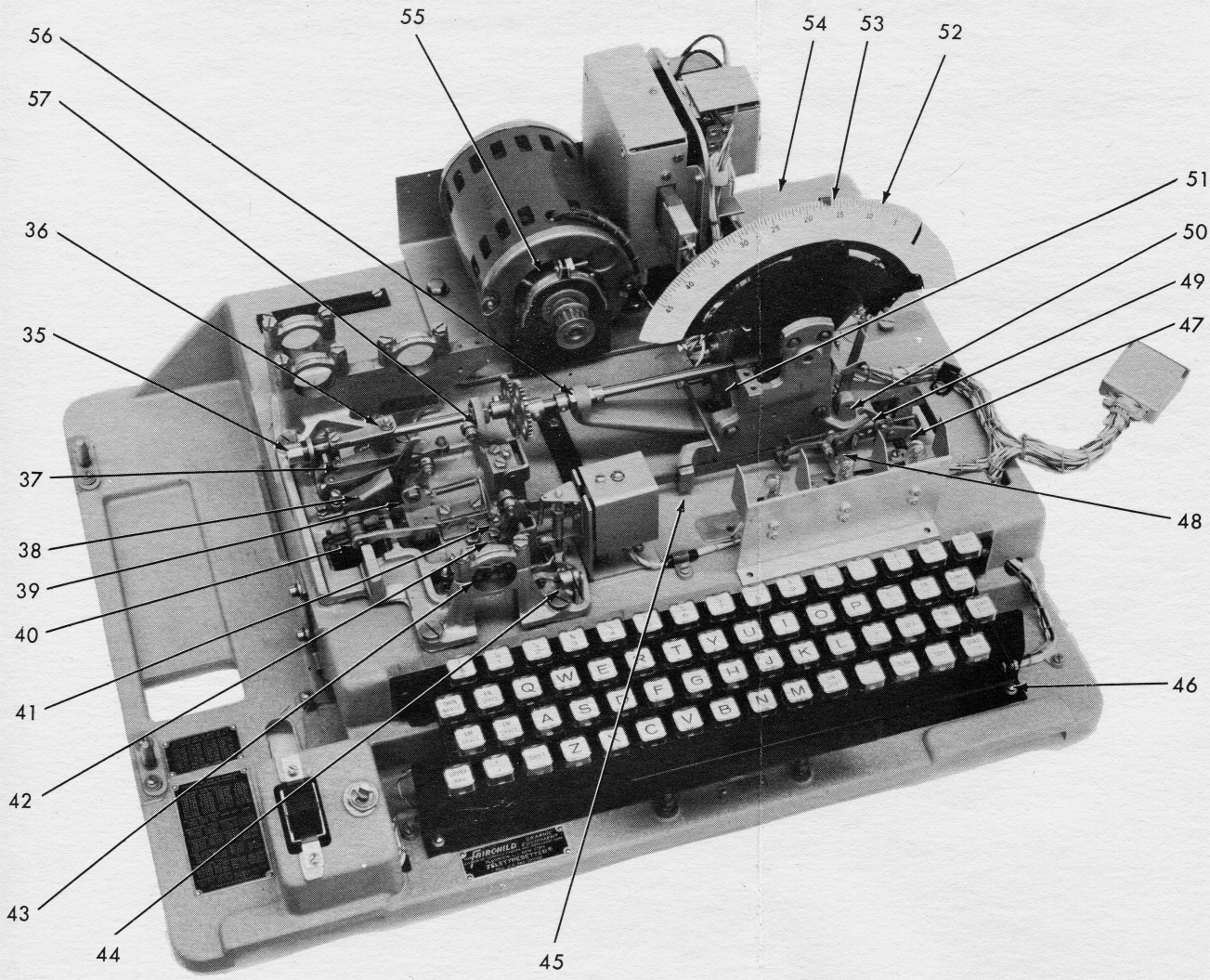

35. Cross Shaft Bearings – two places.
36. Reset Collar Lever Bearings – two places.
37. Reset Collar Lever – all points of contact.
38. Zero Lever Bearings – two places.
39. Transfer Bail Bearings – two places.
40. "T" Transfer Levers – all points of contact.
41. Stop Lever Latch – all points of contact.
42. Stop Lever Bearings – two places.
43. Non-Repeat Latch – all points of contact.
44. Repeat Key Bearing.
45. Spacer Rod – all points of contact.
46. Space Bar Lever Extension – at the guide.
47. Intermediate Pawl Latch – all points of contact.
48. Feed Pawl Bearing.
49. Intermediate Pawl – all points of contact.
50. Spring Arm Bearings.
51. Retaining Pawl Release Lever Bearings.
52. Release Lever Bearings.
53. Adjusting Collar – at prongs.
54. Solenoid Linkages.
55. Motor – two oil holes.
56. Counter Shaft Bearing.
57. Spacer Bail Bearings and Roller.

58. Just
59. Left
60. Pivo
61. Reta
62. Spa
63. Spa
64. Righ

"1000" PERFORATOR

R BASE

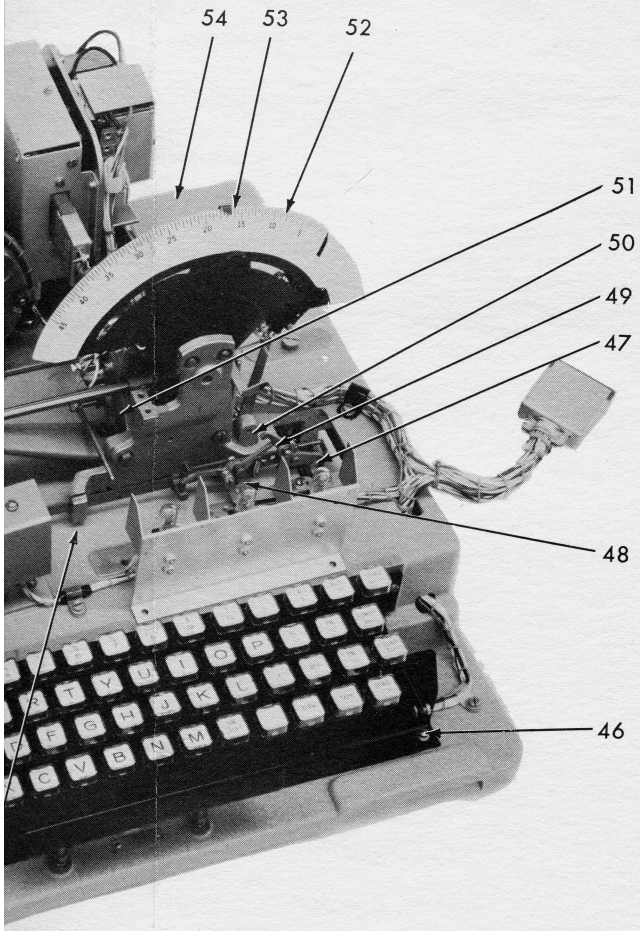

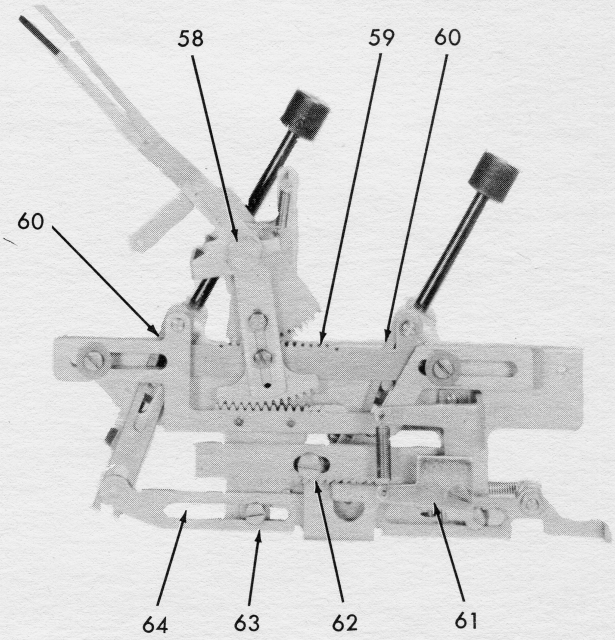

two places.
rings – two places.
l points of contact.
wo places.
two places.
ll points of contact.
points of contact.
wo places.
points of contact.

s of contact.
ion – at the guide.
n – all points of contact.

points of contact.

Lever Bearings.

ongs.

nd Roller.

58. Justification Pointers – all points of contact.
59. Left Pointer Rack – all points of contact.
60. Pivot Adjusting Blocks – at guides.
61. Retaining Pawl Bearings.
62. Spacing Rack – all points of contact.
63. Space Rack Slide – all points of contact.
64. Right Pointer Rack – all points of contact.

LUBRICATION CHART

PERFORATING SELECTOR BAR ASSEMBLY

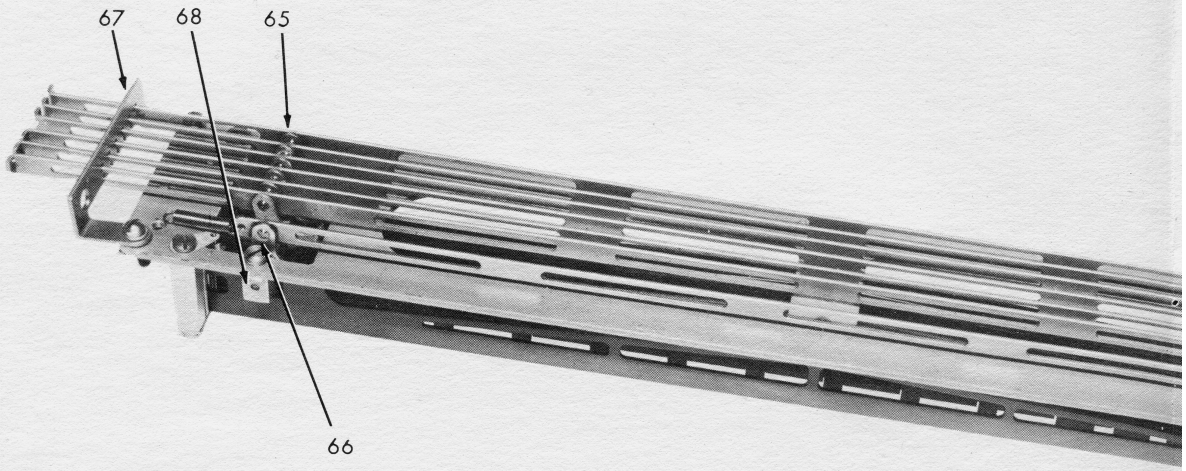

65. Selector Bar Links – all points of contact.
66. Selector Bar Links Bearings.
67. Selector Bar Links Guides.
68. "Y" Levers – all points of contact.

COUNTING SELECTOR BAR ASSEMBLY



69. Counting Selector Levers – all points of contact.
70. Detent Rollers.
71. Counting Selector Bar links Bearings.

CATION CHART TTS STANDARD LIGHT T

ATING SELECTOR BAR ASSEMBLY

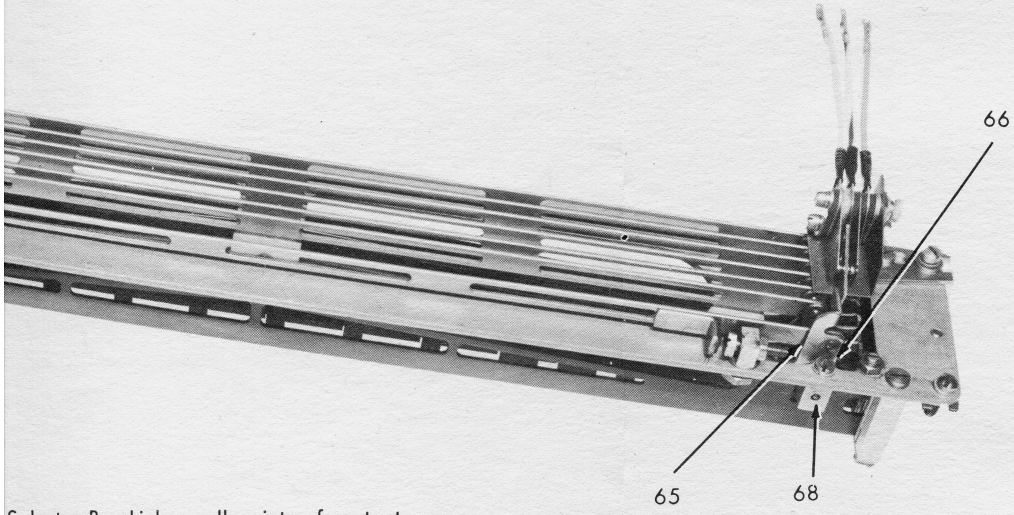

Selector Bar Links – all points of contact.
Selector Bar Links Bearings.
Selector Bar Links Guides.
"Y" Levers – all points of contact.

TING SELECTOR BAR ASSEMBLY

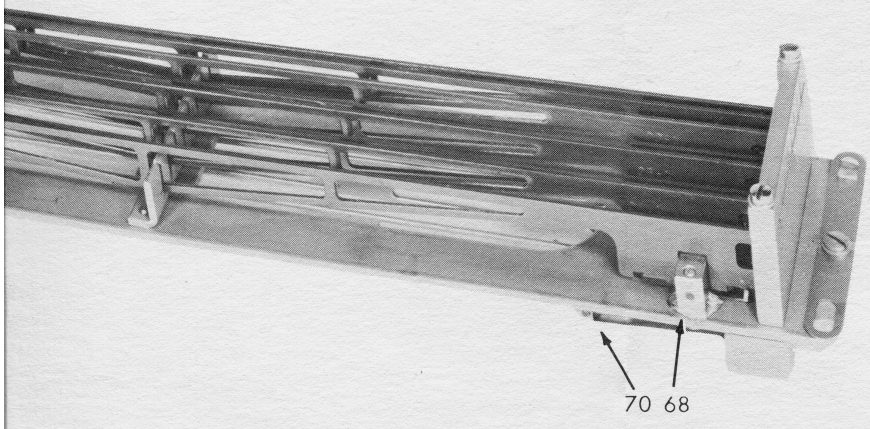

. Counting Selector Levers – all points of contact.
. Detent Rollers.
. Counting Selector Bar links Bearings.

PERFORATOR BASE

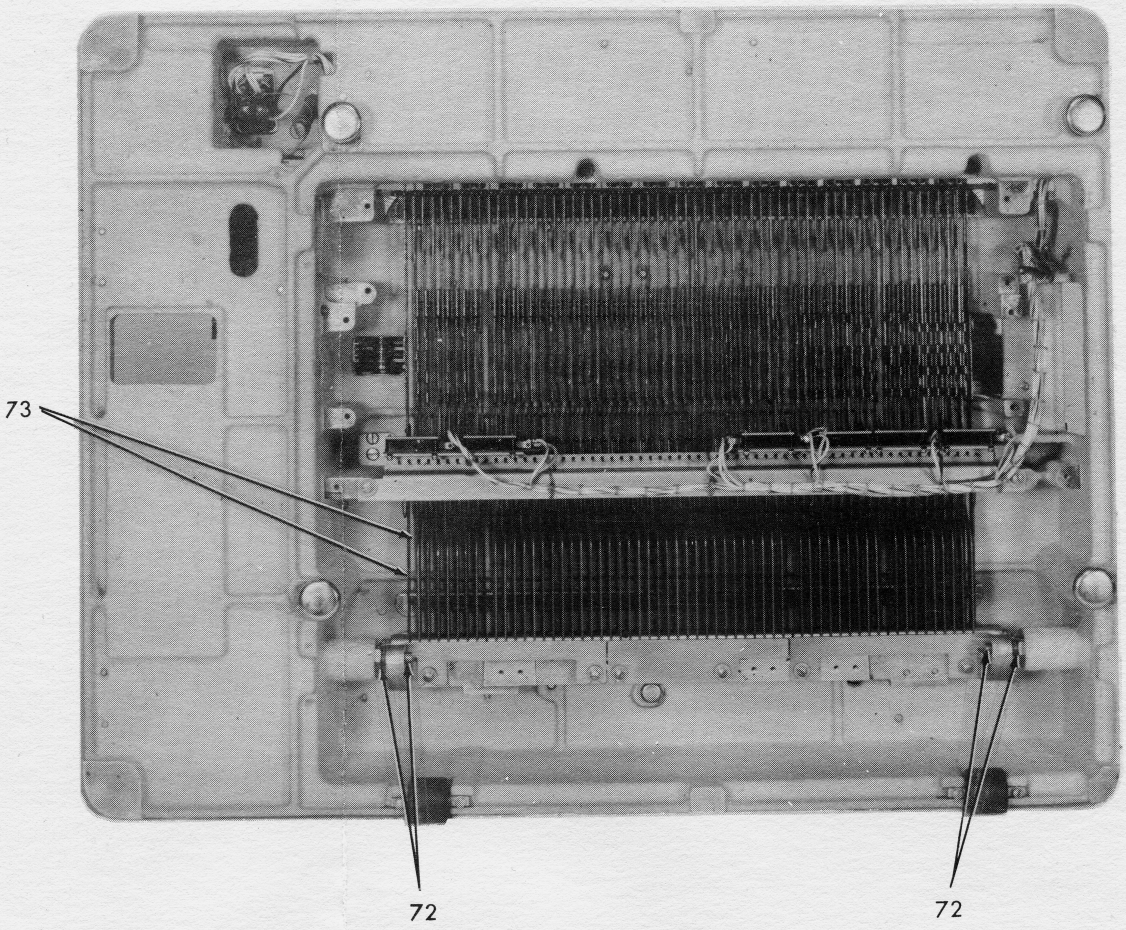

72. Shift Bail Bearings – two places.
73. Key Levers – in rear guide comb.

...CH "1000" PERFORATOR

PERFORATOR BASE

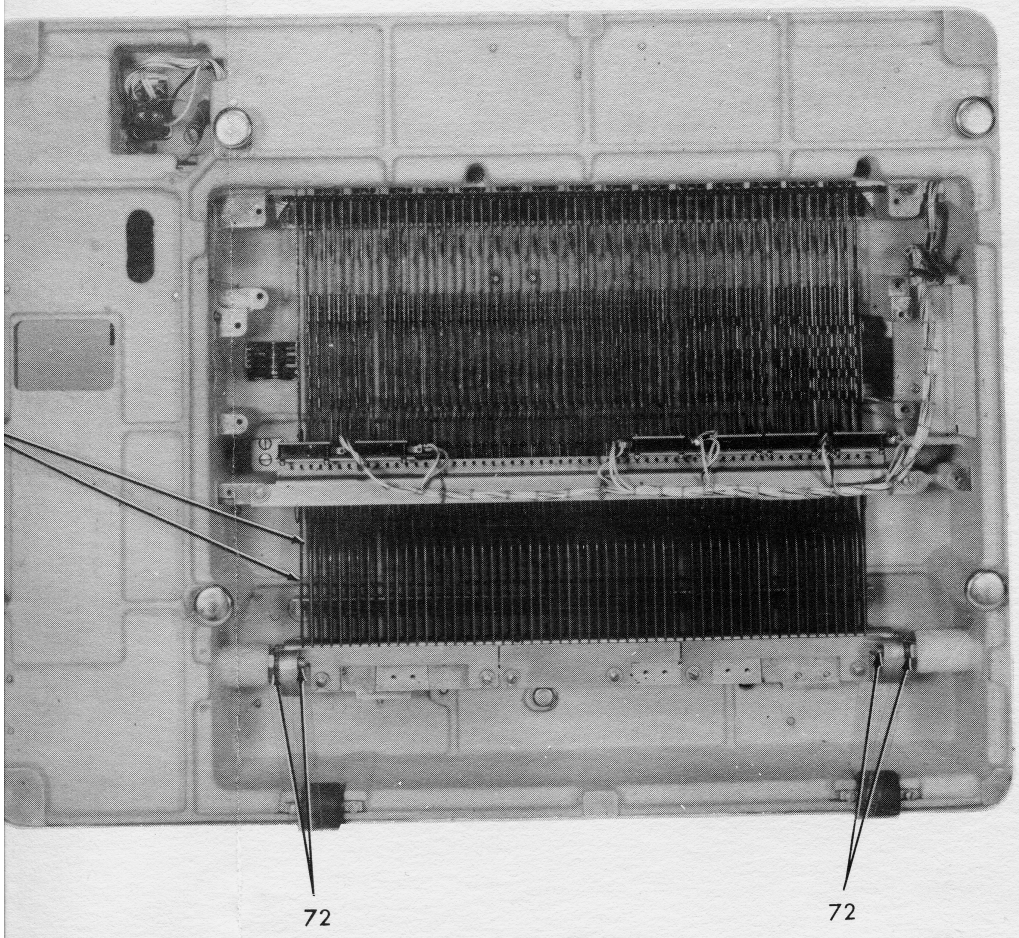

72. Shift Bail Bearings – two places.
73. Key Levers – in rear guide comb.