TELETYPESETTER®

BULLETIN 3B

DESCRIPTION OF THE KEYBOARD TAPE PERFORATORS

FAIRCHILD
GRAPHIC EQUIPMENT FAIRCHILD DRIVE, PLAINVIEW, L. I., NEW YORK

TELETYPESETTER®

BULLETIN 3B

DESCRIPTION OF THE KEYBOARD TAPE PERFORATORS



DIVISION OF
FAIRCHILD CAMERA AND INSTRUMENT CORP

Copyright 1957 by Fairchild Camera and Instrument Corp.
Copyright in all countries participating in International Convention and Pan American Conventions. All rights reserved including rights of translations into all languages.

Printed in U.S.A.

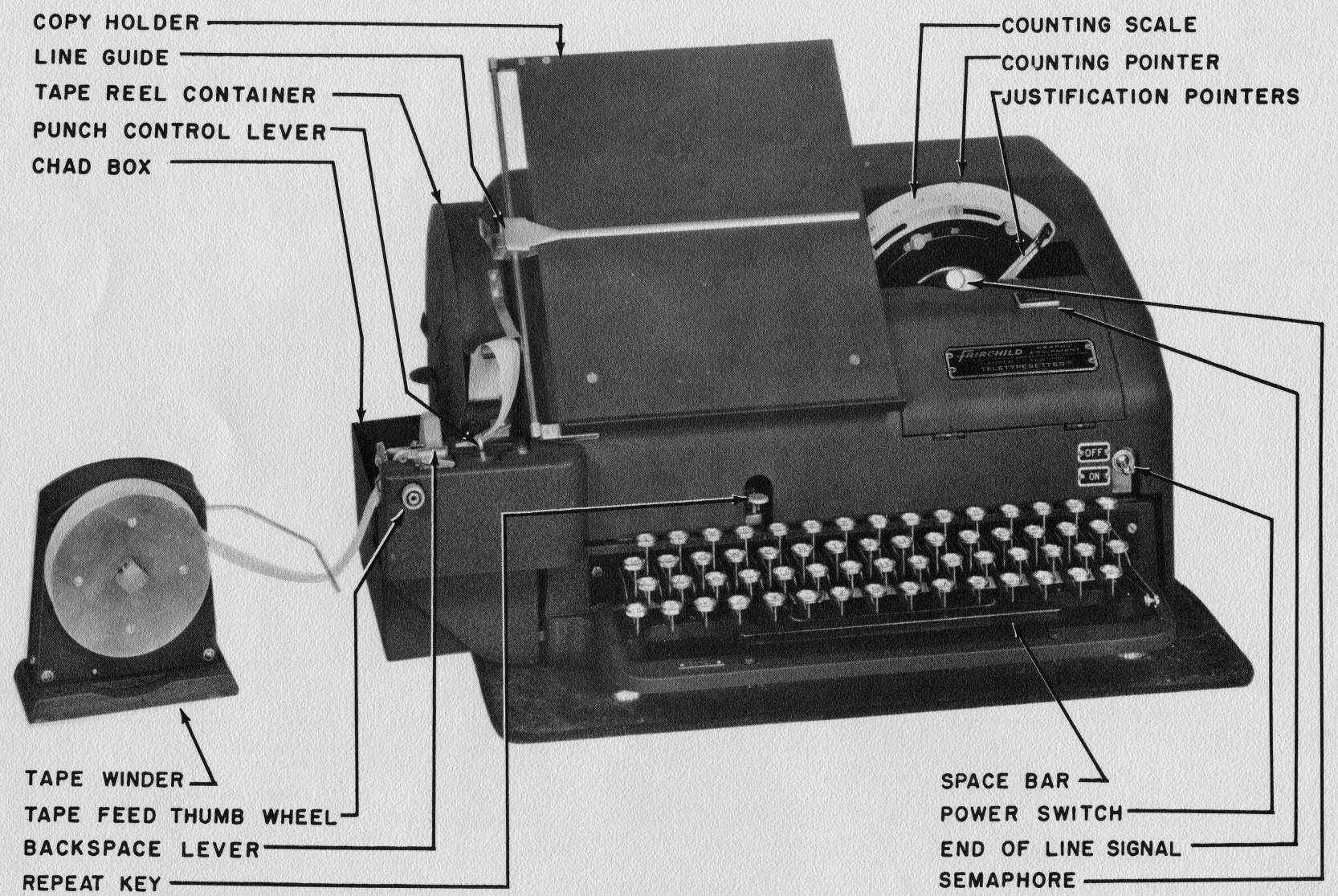

ILLUSTRATION A

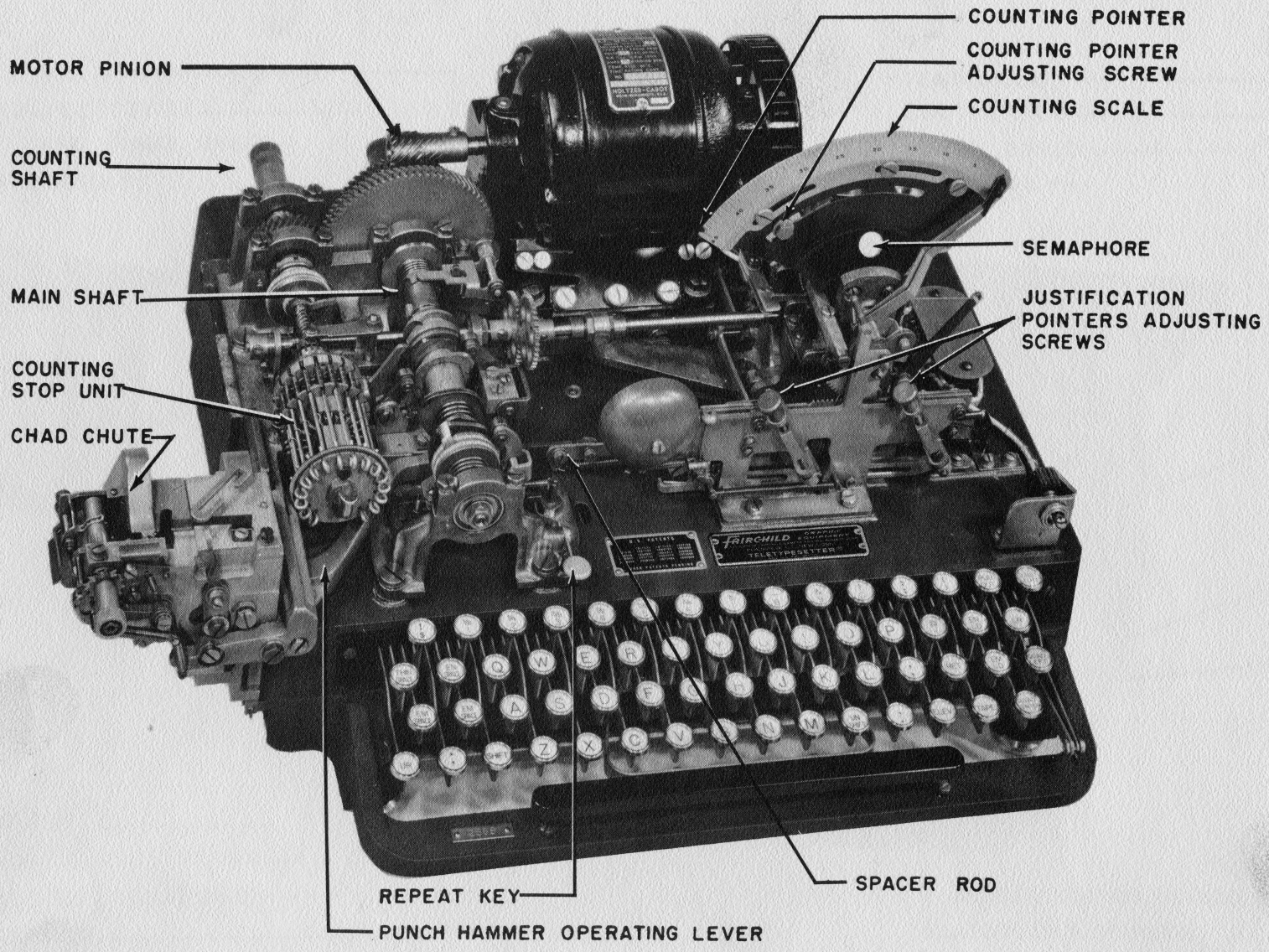

ILLUSTRATION B

CONTENTS

	Page
General	1
Selection Code	1
Perforating Mechanism	3
Main Shaft Functions	4
Tape Feed Mechanism	5
Back Space Lever	6
Punch Control	6
Counting Mechanism	7
Character Grouping	9
Justification Pointers	12
End of Line Signal Lamp	13
Counting and Justification Pointers Return	14
Repeat Key	14

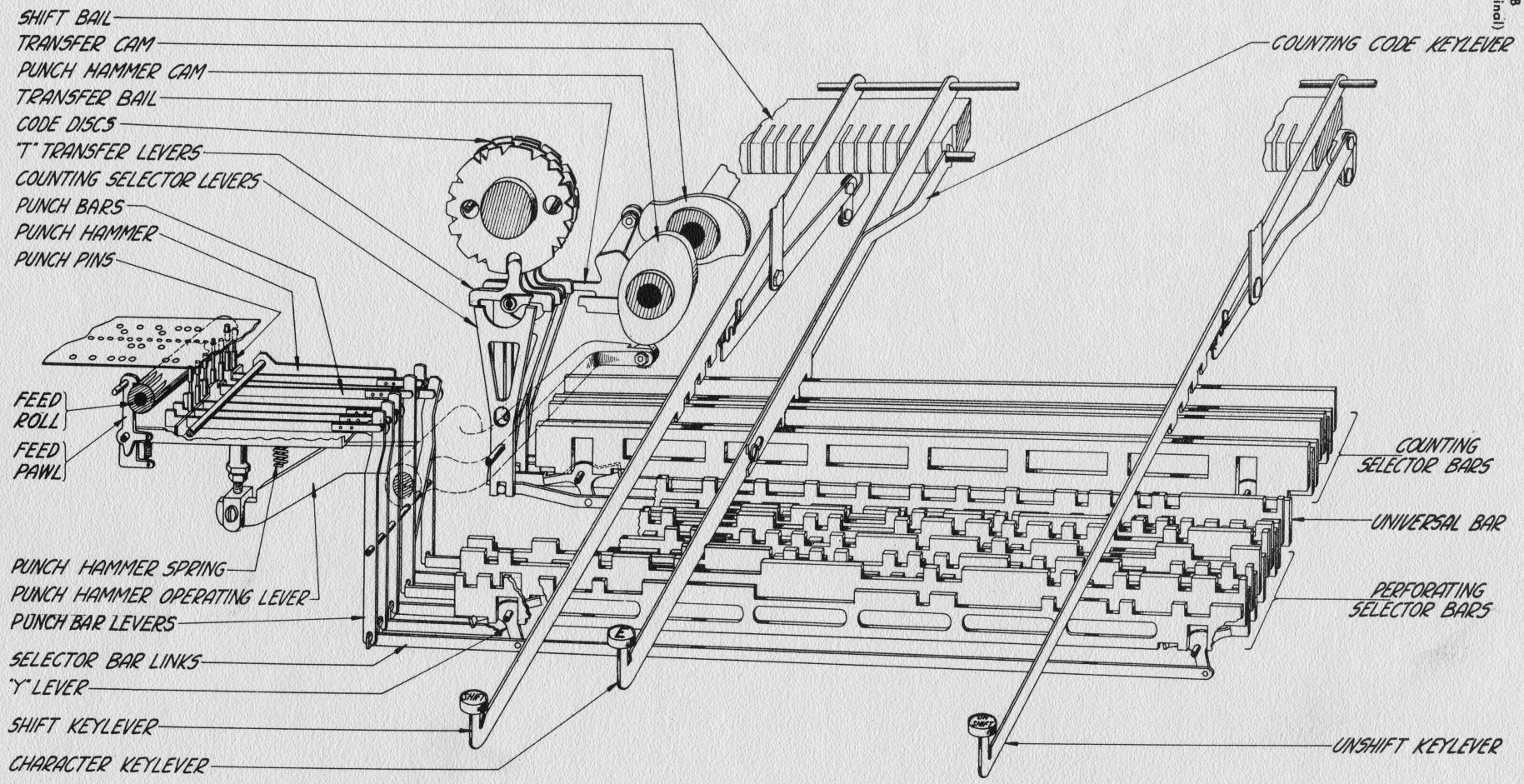
SHIFT BAIL
TRANSFER CAM
PUNCH HAMMER CAM
TRANSFER BAIL
CODE DISCS
"T" TRANSFER LEVERS
COUNTING SELECTOR LEVERS
PUNCH BARS
PUNCH HAMMER
PUNCH PINS
FEED ROLL
FEED PAWL
PUNCH HAMMER SPRING
PUNCH HAMMER OPERATING LEVER
PUNCH BAR LEVERS
SELECTOR BAR LINKS
"Y" LEVER
SHIFT KEYLEVER
CHARACTER KEYLEVER
COUNTING CODE KEYLEVER
COUNTING SELECTOR BARS
UNIVERSAL BAR
PERFORATING SELECTOR BARS
UNSHIFT KEYLEVER

FIGURE 1

DESCRIPTION OF THE TELETYPESETTER STANDARD KEYBOARD TAPE PERFORATOR

GENERAL

The Teletypesetter Perforator is a unit of apparatus that is used to prepare perforated tape which, when fed through a Teletypesetter Operating Unit, operates a slug linecasting machine.

The Perforator is a self contained, motor driven, portable unit. It consists of a set of keys, key-levers, selector bars, perforating and counting mechanism, and end-of-line or justification indicating mechanism. The Perforator is equipped with a power cord and plug. A motor power switch is mounted on the front right-hand side.

The perforating and counting mechanisms of the Perforator are controlled by a keyboard (arranged similarly to that of a typewriter) by means of which combinations of holes, corresponding to the selections of the code, may be punched in a 7/8" wide paper tape.

NOTE: In all the figures in this bulletin, fixed pivot points are designated by solid black circles.

SELECTION CODE

The selection code used to select characters and functions is known as the Teletypesetter six-unit code, (Figure 2 shows the six-unit code). With this code a total of 64 combinations are possible.

| SHIFT / Unshift | Tape Feed / t | T / Return / o | O / Space Band / n | N | H | M / Elevate / i | I | R | C | L | P | G | V | E | A | S | U | D | J | F | K | Z | W | Y | Q | B / Shift / x | X / Unshift | Thin Space / 3 | 8 / ? | P.F. or L.M. / $ | ! / Add Thin Space | Em Space / 8 | – / 7 | 7/8 / & | ¥ / - | @ / 1/2 / 4 | * / Bell | Comma | Quad Left | En Space | Q.R. or U.M. / 5/8 / 5 | ff /) | (/ V.Rule | Em Sp. / 1/4 / 2 | fl | Em Leader | 3/4 / lb / 6 | ? / fl / 0 | En Leader / fi / 9 | 8 / Upper Rail / , | : / Lower Rail / Period | 1/8 / ff / - | Quad Center | Rub Out |
|---|---|---

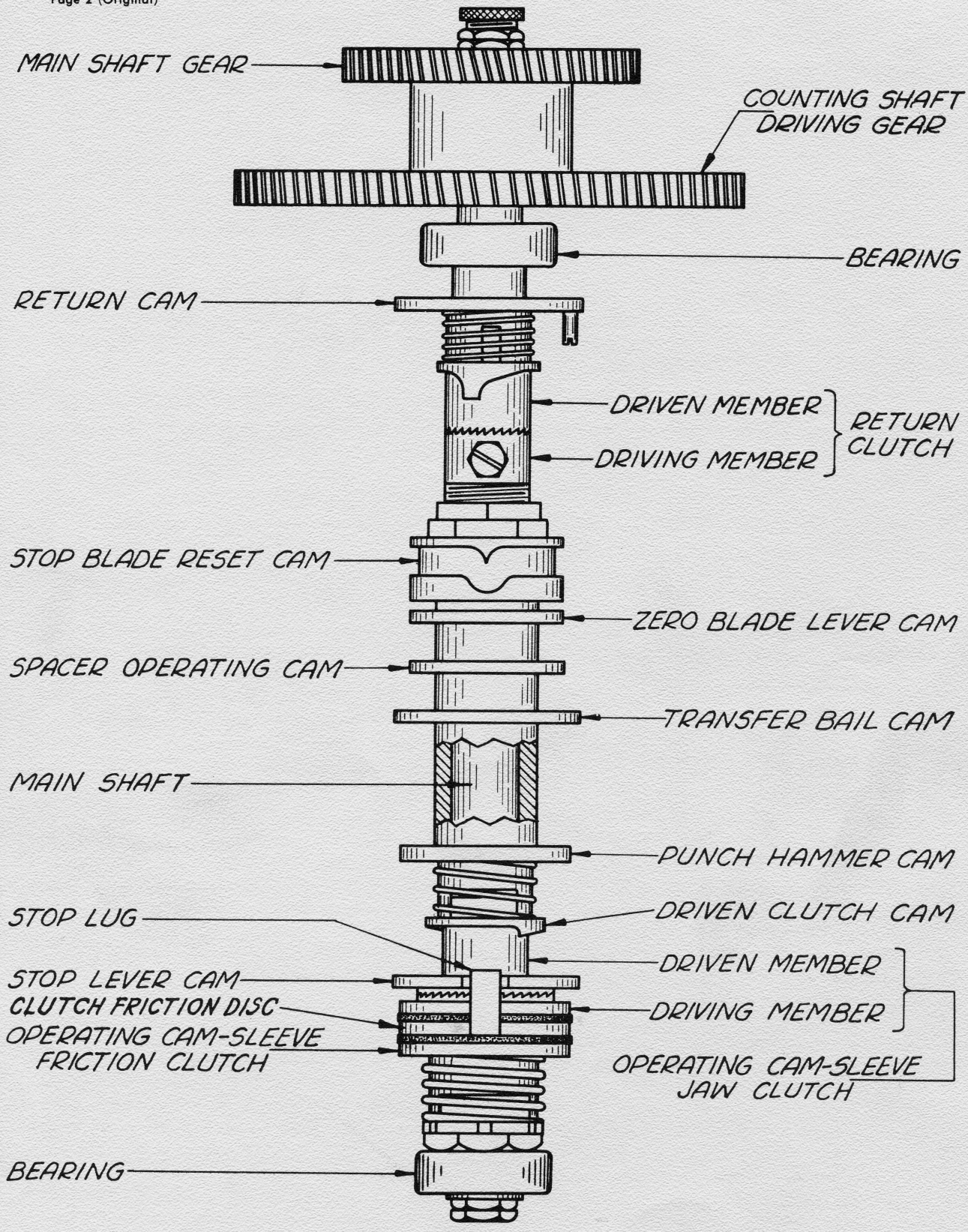
MAIN SHAFT GEAR
COUNTING SHAFT DRIVING GEAR
BEARING
RETURN CAM
DRIVEN MEMBER
DRIVING MEMBER
RETURN CLUTCH
STOP BLADE RESET CAM
ZERO BLADE LEVER CAM
SPACER OPERATING CAM
TRANSFER BAIL CAM
MAIN SHAFT
PUNCH HAMMER CAM
STOP LUG
DRIVEN CLUTCH CAM
DRIVEN MEMBER
STOP LEVER CAM
CLUTCH FRICTION DISC
DRIVING MEMBER
OPERATING CAM-SLEEVE FRICTION CLUTCH
OPERATING CAM-SLEEVE JAW CLUTCH
BEARING

FIGURE 3

PERFORATING MECHANISM

The Perforator is equipped with a mechanism that perforates code combinations containing one to six holes (plus a tape feed hole) in the tape each time a key is depressed. Figure 4 shows the perforating mechanism.

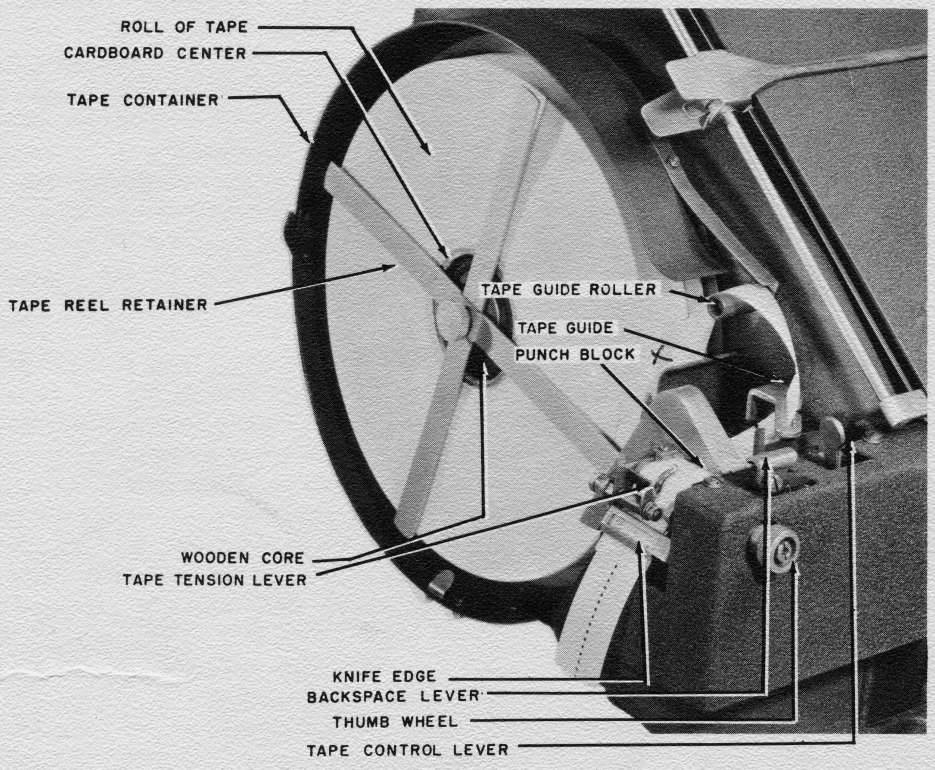

FIGURE 4 PERFORATING MECHANISM

Beneath the keylevers are six pairs of perforating selector bars and a universal bar extending across the width of the keyboard (See Figure 1). The bars have notches on their upper edges according to the requirements of the code and are guided at both ends so that they may be moved upward or downward. The notches in the front and rear perforating selector bars of each pair are staggered so that on either one of the pair there will always be a high portion in the path of each keylever. The ends of each pair of perforating selector bars rest on the arms of "Y" levers, the front perforating selector bars resting on the left arms of the "Y" levers, while the rear bars rest on the right arms.

When a keylever is depressed, those perforating selector bars having their high portions in line with that keylever, are moved down. This causes the "Y" levers to move the other selector bar of each pair upward. Should the rear one of any pair of selector bars be moved downward, the lower extensions of the corresponding "Y" levers will be moved to the left; and to the right when the corresponding front selector bars are moved downward. Thus it may be seen that the links which are connected to the ends of the lower extensions of the "Y" levers will be moved to the left when the rear selector bar is moved downward and to the right when the front selector bar is moved downward.

The left ends of the selector bar links are engaged in the lower ends of punch bar levers. The upper ends of the punch bar levers are connected to the punch bars. When the links are moved to the left, the punch bars will be moved to the right and their high portions (located at the extreme left end) will be positioned in the path of the punches that are to be selected to perforate the tape.

MAIN SHAFT FUNCTIONS

The power for operating the perforating and counting mechanism is supplied by the motor. The motor pinion meshes with the main shaft gear which is mounted on a hub attached to the rear end of the main shaft (Figure 3). The counting shaft driving gear (mounted on the same hub with the main shaft gear) drives the counting shaft so that the two shafts will be caused to revolve continuously. The main shaft assembly includes the operating cam sleeve friction and jaw clutches, operating cam sleeve, return clutch, and the return cam. The operating cam sleeve friction clutch is located at the forward end of the main shaft and consists of two steel discs keyed to the shaft, two felt washers and a clutch friction disc. Two stop lugs on the clutch friction disc engage notches in the stop lever cam which is part of the operating jaw clutch driven member (Figure 5). Prongs on the rear end of the driven clutch member engage slots in the operating cam sleeve assembly (Figure 3). Normally the cam sleeve assembly is held stationary because the latching extension of the stop lever is engaged by the stop lever latch (Figure 5) and the stop arm on the stop lever is against the stop lug on the friction disc. Thus it may be seen that when the friction disc is permitted to revolve, the operating cam sleeve will also revolve.

At the same time that the selector bars are being positioned by depressing a keylever, the universal bar is moved down against the tension of a spring. The right arm of the "Y" lever, located at the left end of the universal bar will move the trip-off plunger upward against the left end of the stop lever latch (Figure 5). The right end of the latch will then move down out of engagement with the stop lever latching extension. The stop lever spring in turn pulls the stop lever out of engagement with the lug on the clutch friction disc, permitting the cam sleeve assembly to revolve. After the cam sleeve assembly has revolved a few degrees, the driven clutch member will be permitted to mesh with the driving member (Figure 3) and the cam sleeve will be rotated through the medium of the jaw clutch. It should be noted that two friction clutch stop lugs are provided so that the operating cam sleeve will be stopped twice during each revolution and the cams on the operating cam sleeve are arranged to perform their functions during each half revolution. Near the end of the one-half revolution, the driven clutch member will be cammed out of mesh with the driving member by the driven clutch cam roller. As the stop lever roller rides up onto the high portion of the stop lever cam, the stop lever latching extension is moved toward the left into engagement with the stop lever latch (Figure 5).

The non-repeat latch is provided to prevent a selection being perforated more than once with each operation of a keylever (Figure 5). Should the keylever be held depressed for a period longer than that required for one-half revolution of the cam shaft, the stop lever latching extension will engage the notch on the non-repeat latch and the clutch stop lever will be held in the path of one of the friction disc stop lugs. When the keylever is released, the stop lever latch will move the non-repeat latch upward out of engagement with the stop lever latching extension which permits the stop lever to move into engagement with the stop lever latch, continuing to hold the stop arm in the path of a stop lug.

As the cam sleeve revolves, the roller on the right end of the punch hammer operating lever (Figures 1 and 6) will ride onto a high part of its cam, moving the left end of the lever upward. The punch hammer, which is engaged with the plunger that is attached to the left end of the operating lever, will also be moved upward (against the tension of its spring) carrying with it the punch bars. The selected punch bars (those which have been moved to the right and have their high portions in line with the punches) will drive the corresponding punches through the tape. An extension is provided on the punch hammer beneath the tape feed hole punch, so that with each operation of the punch hammer, a feed hole will be perforated.

The punch hammer operating lever roller will now ride down onto a low portion of the operating cam, permitting the punch hammer spring to pull the punch hammer downward to the normal un-operated position. This will also permit the punches to be withdrawn from the tape.

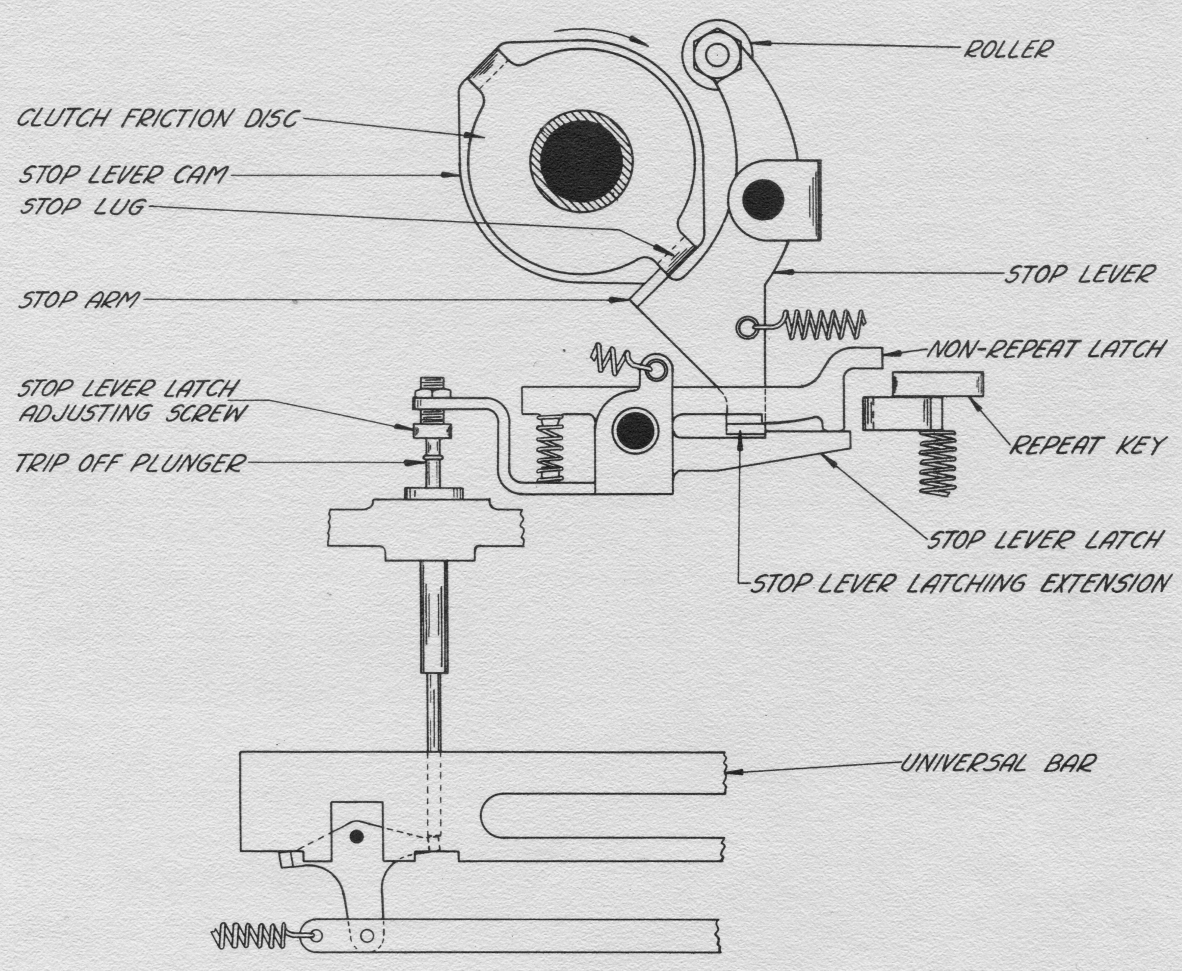

FIGURE 5

TAPE FEED MECHANISM

The feed roll is located to the left of the die block (Figures 1 and 6). Spaced at equal intervals around the feed roll is a series of projecting feed pins which mesh with the feed holes punched in the tape. A tape tension lever holds the tape against the feed roll, keeping the feed holes in the tape in constant mesh with the tape feed pins.

During the upward movement of the punch hammer, the feed pawl, which is attached to the punch hammer, engages the next tooth on the feed roll. When the punch hammer moves downward, the feed roll will revolve, advancing the tape. The star wheel and detent are provided to insure an equidistant spacing of the tape.

BACK SPACE LEVER

The back space lever is provided so that any errors in the perforated tape may be corrected before it is used to operate the linecasting machine. The back space lever is used to move the tape backwards. The rub-out key may then be depressed, causing six holes to be perforated over the error. This combination passes through the Operating Unit without performing any function on the linecasting machine.

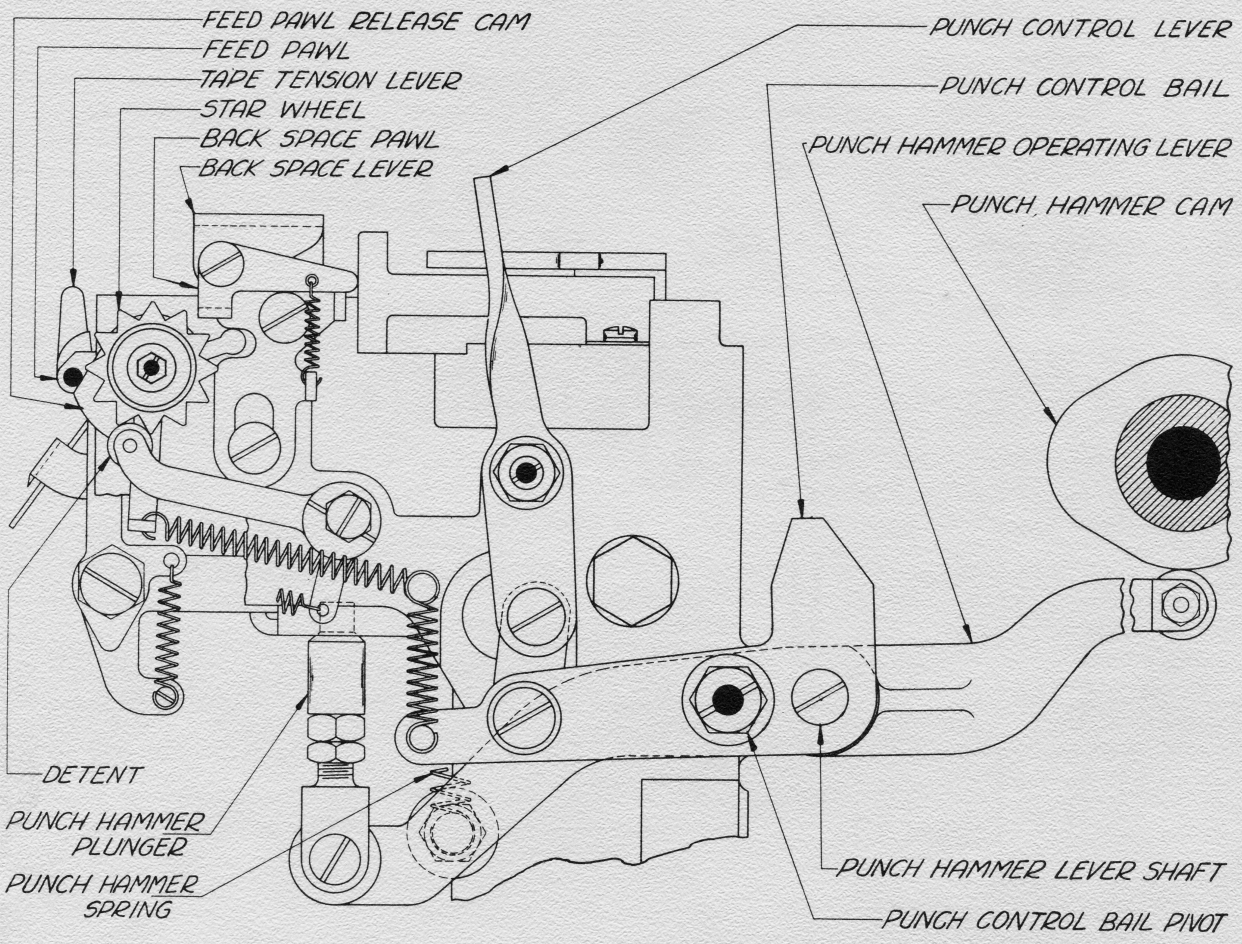

FIGURE 6

As the back space lever is moved downward (Figure 6), the feed pawl release cam moves the feed pawl out of engagement with the feed roll ratchet. Then the back space pawl engages a tooth on the star wheel rotating the tape feed roll backwards one character space.

PUNCH CONTROL

The manually operated punch control is provided so that the operator may measure the length of the text to be set up without perforating the tape. The punch hammer operating lever is pivoted on the punch hammer lever shaft which is located at the right end of the punch control bail (Figure 6). With the punch control lever to the left (normal operating position), the left end of the punch control bail is held down and the punch hammer lever will be positioned so that its roller will ride against the punch hammer lever operating cam.

When the punch control lever is moved to the right, the left end of the punch control bail will be pulled upward by its spring. The punch hammer lever cam roller will then be moved down out of the path of its cam.

COUNTING MECHANISM

The Perforator has, in addition to a perforating mechanism, a counting mechanism for indicating the cumulative width of the matrices and the expansion limits of the spacebands.

When unit system matrices are used in the linecasting machine, the width of the EM space is divided into 18 equal units. Figure 7 shows the counting scale and its associated pointers.

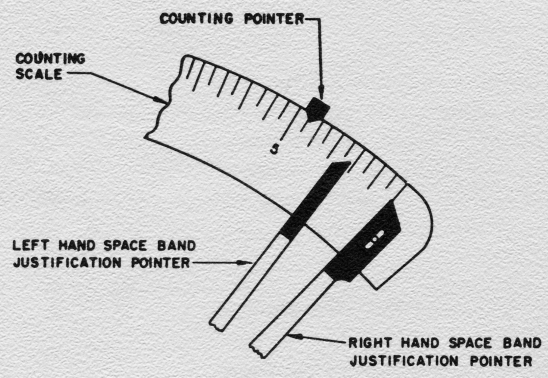

FIGURE 7 COUNTING SCALE

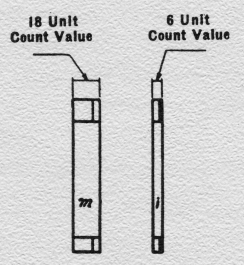

FIGURE 8

On the Teletypesetter Perforator, line justification is achieved by means of the Counting Scale with its three pointers — the Counting Pointer, the Left-Hand Spaceband Justification Pointer, and the Right-Hand Spaceband Justification Pointer (See Figure 7).

The counting pointer moves across the counting scale from left to right as the keys are depressed for the various characters. The distance that the counting pointer moves for each keystroke depends on the matrix width of the character selected. For example, when using unit system matrices, the counting pointer moves one full scale division for the letter "m" and only one-third of a scale division for the letter "i" (See Figure 8); for other character widths, the counting pointer moves a proportional distance. Thus, as the counting pointer moves along the counting scale, it registers the cumulative widths of the characters used in the line. Figure 9 visualizes the counting system of unit system matrices for the Perforator Operator.

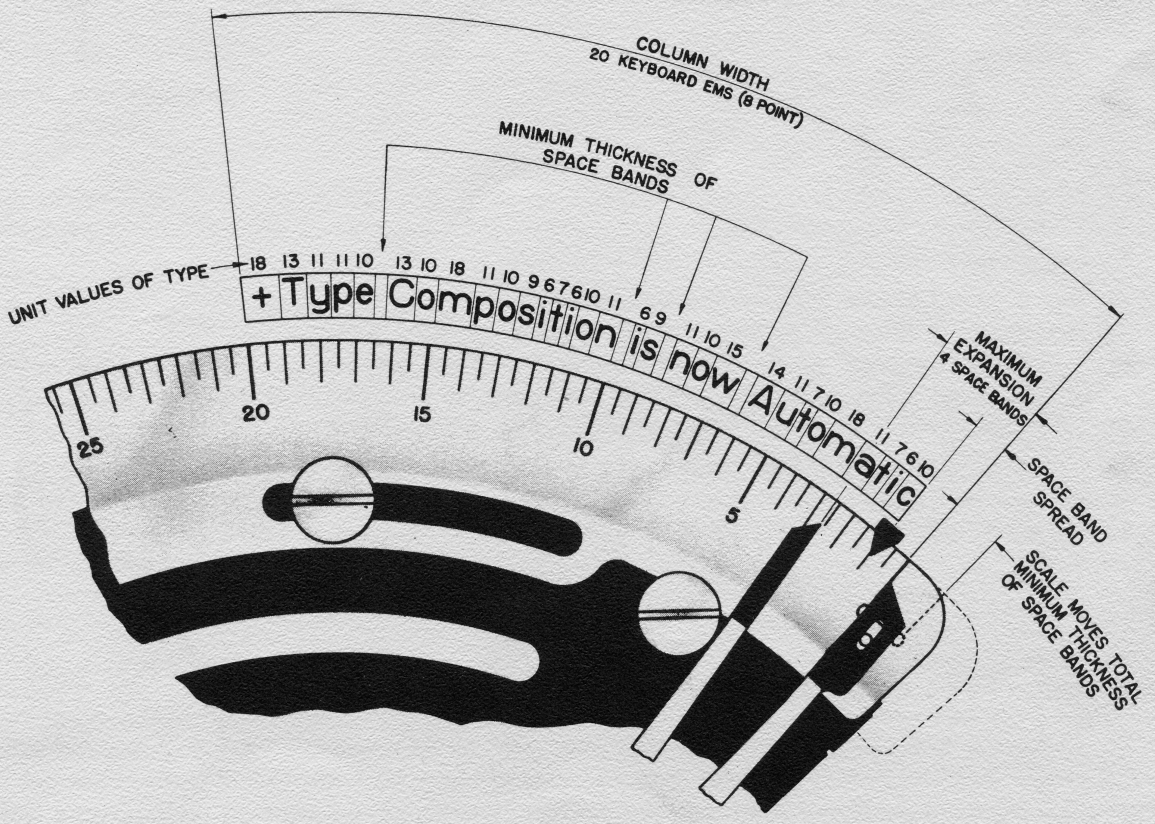

FIGURE 9 INDICATOR SCALE

When the space bar is depressed, the counting pointer remains stationary — but the counting scale itself, actuated by the right-hand spaceband justification pointer, moves from right to left. This movement of the scale measures the thin part of the spaceband (the minimum width of the space). At the same time, the left-hand spaceband justification pointer moves to the left a distance corresponding to the thick part of the spaceband (maximum space width). See Figure 10.

When the counting pointer moves into a position between the two spaceband justification pointers, the line is considered to be within the "justification range" and may be ended by depressing the return (RET) and then the elevate (ELEV) keys.

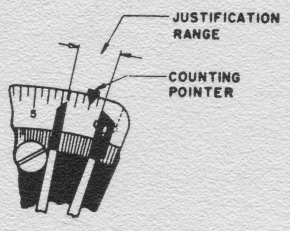

FIGURE 10
Counting Pointer within Justification Range.

The spread or separation between the two spaceband justification pointers represents the allowable range for ending the line (Figure 10). If the counting pointer is just inside the right-hand spaceband justification pointer when the line is ended, the width of the spacing between words will be minimum (Figure 11). If the counting pointer is just inside the left-hand spaceband justification pointer, the width of the spacing between words in the line will be maximum.

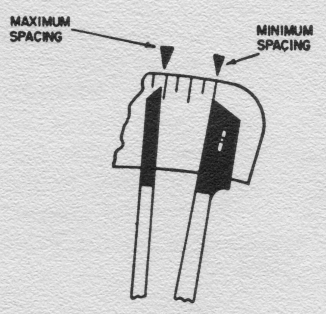

FIGURE 11
Maximum and Minimum Spacing.

If the line is ended *before* the counting pointer has passed the left-hand spaceband justification pointer, the result will be a loose line which will not cast a "slug" on the linecasting machine. If the counting pointer is *beyond* the right-hand spaceband justification pointer, a tight line will result (Figure 12). Either condition may cause damage to equipment.

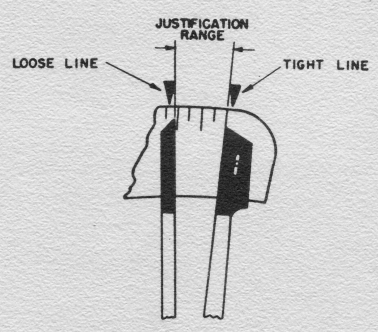

FIGURE 12

The matrices of the unit system are made in widths directly proportional to the "em" quad, each division of the unit system being equivalent to 1/18 of the "em" quad. All other characters in any font will have a brass-width of 5 to 18 units, the "en" quad for example being 9 units wide or 9/18 of the "em" quad. Matrices from 5 to 12 point size may be made to comply to the unit system. Figure 13 shows the widths of unit matrices of which the "em" quad measures .1107".

UNIT SIZE	BRASS SIZE	CHARACTER GROUPING
6	.0369	PERIOD · COMMA · APOSTROPHE · HYPHEN · VERTICAL RULE · QUOTE · THIN SPACE · LOWER CASE i l
7	.043	LOWER CASE j f t
8	.0492	CAPITAL I
9	.0553	ALL FIGURES · DOLLAR MARK · POUND STERLING · SEMI-COLON · COLON · EXCLAMATION · EN LEADER · ASTERISK · LEFT AND RIGHT HAND BRACKETS · ALL REFERENCE MARKS · FIGURE SPACES · LOWER CASE r s z · EN DASH · ()
10	.0615	LOWER CASE c e o
11	.0676	LOWER CASE a b d g h n p q u v x y k fi fl · CAPITAL J S ?
12	.0738	CAPITAL Z
13	.0799	CAPITAL C T L ff
14	.0861	LOWER CASE æ · CAPITAL A B F O P Q V &
15	.0922	LOWER CASE w œ · CAPITAL D E G R U X Y H K N
18	.1107	EM SPACE · EM LEADER · EM DASH · EM FRACTIONS · @ % lb CAPITAL M W OE AE · LOWER CASE m ffi ffl

FIGURE 13

The counting mechanism advances the counting pointer the required amount to correspond with the width of the letter or character to be set up in the casting machine. This is accomplished by means of a selecting mechanism through the medium of counting code keylevers and four sets of counting selector bars.

The notches in the forward ends of the counting code keylevers fit over studs on the character keylevers (Figure 1). The rear ends of the counting code keylevers are pivoted on the shift bail.

A detent is provided to hold the shift bail in either the shift or unshift position. A red and white semaphore located on the counter bracket is operated in conjunction with the shift bail through the medium of levers. White indicates the unshift position and red indicates the shift position. When a keylever is depressed, the counting code keylevers will be moved down against the counting selector bars. The combination set up in these selector bars is determined by the coding on the lower surface of the counting code keylevers. It should be noted that the method of selection is somewhat similar to that of the perforating selecting mechanism, except that the notches are located on the counting code keylevers instead of on the selector bars.

The "SHIFT" and "UNSHIFT" keys control the position of the shift bail, making it possible to change the counting selection (by shifting the relationship of the counting code keylever notches to that of the counting code bars) for shift and unshift characters. By this change in the selection, the counting mechanism will be advanced the proper amount corresponding to the unit width of either the shift or unshift characters.

The four sets of counting selector bars, used with the counting mechanism, provide a possibility of sixteen combinations. The counting selector bar assembly (which includes "Y" levers and links) is arranged similarly to that of the perforating selector bar assembly. The left ends of the links engage the counting selector levers.

When a keylever is depressed, in addition to setting up code combinations on the punch bars, code combinations are also set up on the selector levers of the counting mechanism.

At about the time the punch hammer operating lever roller is on a high part of its cam (when the tape is being perforated), the transfer bail roller is also on a high part of its cam. When the "T" transfer levers (which are pivoted on a shaft attached to the transfer bail) are moved down against the counting selector levers, the "T" transfer levers will position themselves to correspond with the selection set up (Figure 1). The upper extensions of the "T" transfer levers (which engage in the

notches of the code discs) will in turn transfer this selection to the code discs by rotating them either clockwise or counterclockwise to correspond with the selection. The four code discs, which are part of the counting stop unit, have a series of notches in their outer edges. Equally spaced around the circumference of the code discs are sixteen stop pins (Figures 14 and 15). These pins are held in slots of guides and are pulled against the edges of the code discs by springs.

With the code discs set in any particular combination, their notches will be lined up so that the selected stop pin will be permitted to move toward the center. The stop pins fit into the notches of stop pin plungers so that a selected stop pin will move its plunger into the path of one of nineteen stop blades (Figures 14 and 15).

These nineteen stop blades are fitted into grooves in the stop blade shaft to the rear of the code discs. The blades are held in the grooves and are detented in their front and rear positions by two garter springs.

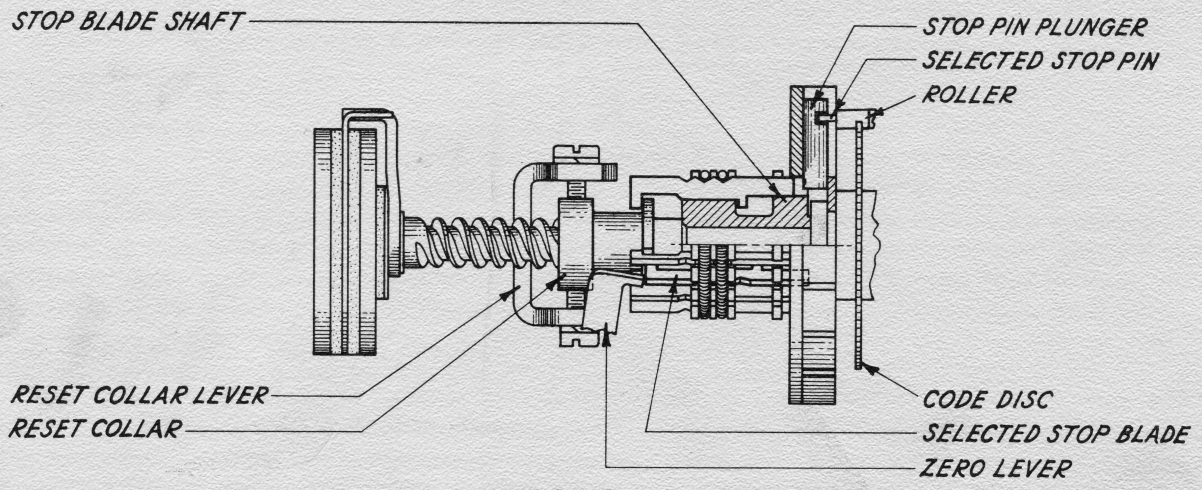

FIGURE 14

At practically the same time as the transfer bail starts moving downward, the zero cam lever rides up onto a peak of its cam. The lower end of the zero cam lever will then move against the zero lever, the upper extension of which will push the stop blade opposite it to its forward position. This stop blade will be held in its forward position by the detenting action of the garter springs. The zero cam lever will then ride onto the low portion of its cam, permitting the zero lever to be moved away from the stop blades by a spring. While the zero lever is moving the stop blade forward, the reset collar is resetting the previously selected stop blade, the reset collar being actuated by the reset collar lever roller moving onto the high portion of the stop blade reset cam. The stop blade that is being moved forward by the zero lever is not affected by the movement of the reset collar, however, because there is a notch in the collar at the zero position. When the stop blade that is being reset has been moved far enough by the reset collar to clear the stop pin plunger, the counting shaft friction clutch will rotate the stop blade shaft until the stop blade (which was just moved forward by the zero lever) strikes the stop pin plunger which has just been selected.

The distance that the stop blade shaft rotates is determined by the unit value of the character selected and will be indicated on the counting scale by the movement of the counting pointer. Thus the counting pointer (Figure 16) is advanced by the rotation of the stop blade shaft worm through the medium of gears and shafts, an amount that will correspond to the unit width required for that character.

When any function key is depressed, the #1 stop pin and plunger is selected on the counting stop unit. The #1 stop pin plunger is located next to the zero stop blade position. When a character follows a function, the stop blade previously selected for the function will not be reset by the reset collar (because of the notch at this point) but it will be used again instead of the stop blade set

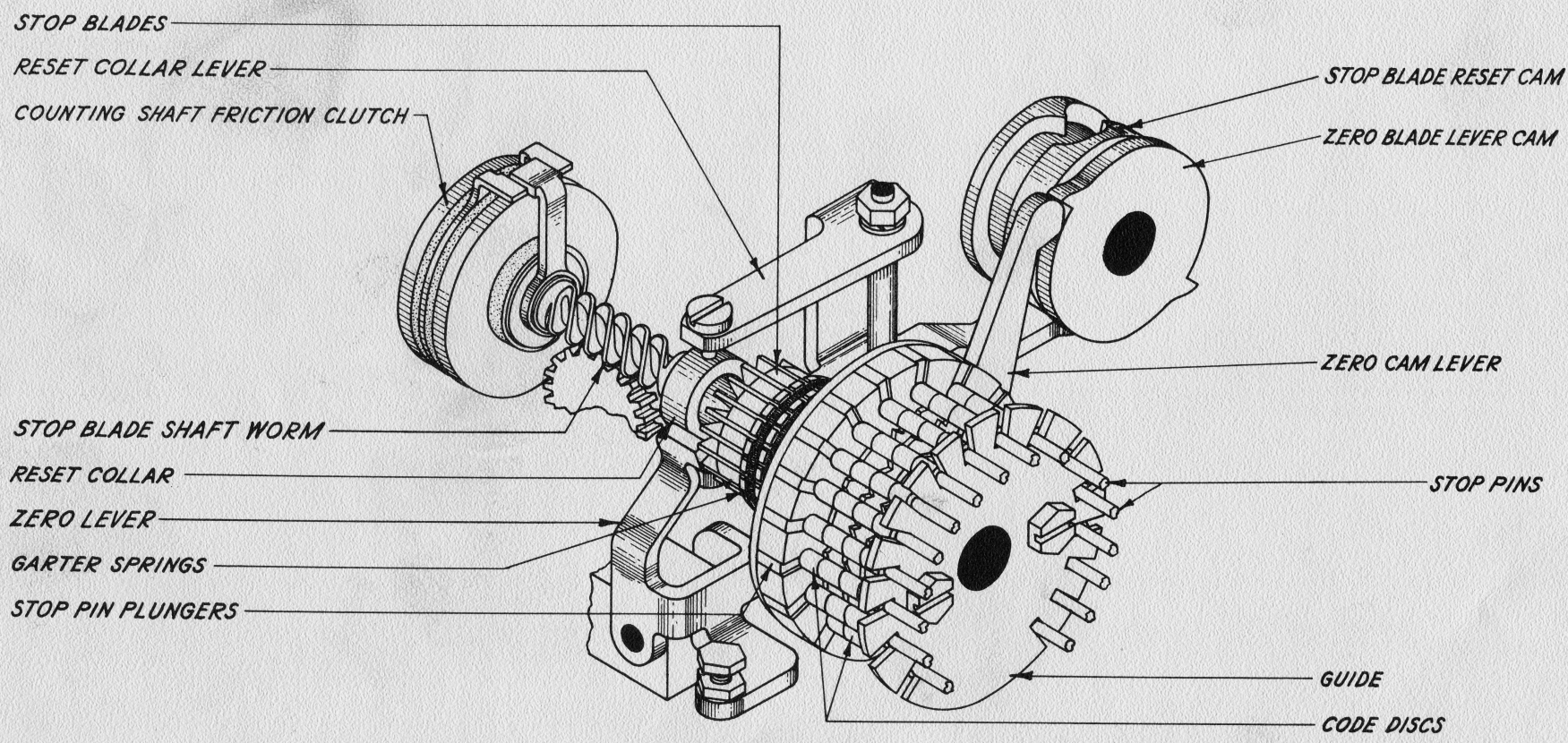
STOP BLADES
RESET COLLAR LEVER
COUNTING SHAFT FRICTION CLUTCH
STOP BLADE RESET CAM
ZERO BLADE LEVER CAM
ZERO CAM LEVER
STOP BLADE SHAFT WORM
RESET COLLAR
ZERO LEVER
GARTER SPRINGS
STOP PIN PLUNGERS
STOP PINS
GUIDE
CODE DISCS

FIGURE 15

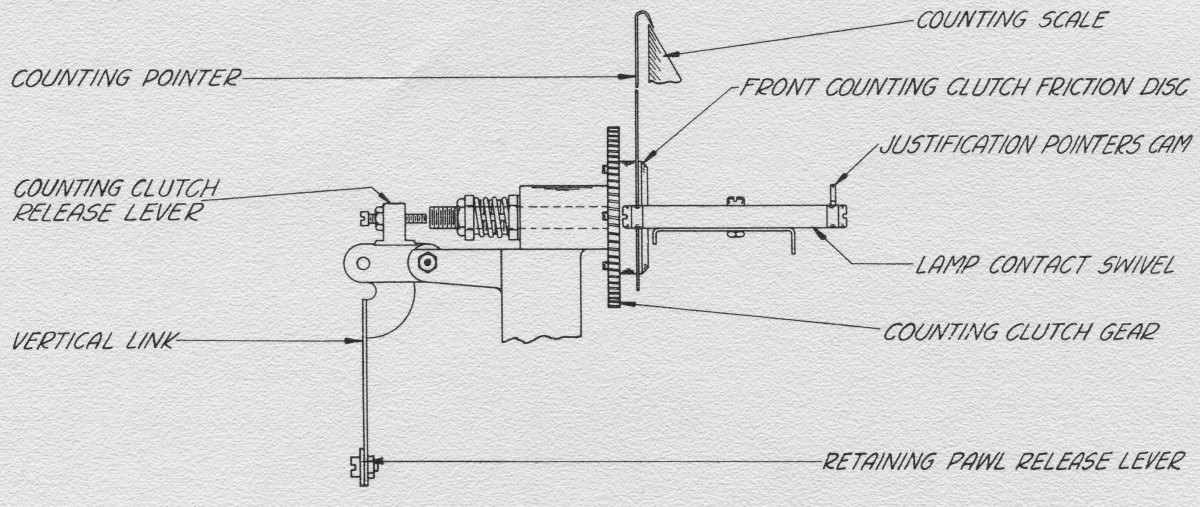

FIGURE 16

up by the zero lever to determine the stopping point of the stop blade shaft. Therefore, the distance traveled by the stop blade shaft in cases of this kind (when a character follows a function) is equivalent to the distance required for that character less the distance previously traveled for the function.

JUSTIFICATION POINTERS

In addition to the counting pointer, two justification pointers are provided to indicate the range of space band expansion on the casting machine (Figure 17). They operate in conjunction with the counting mechanism and are normally held by their springs at the zero position on the counting scale. The justification pointers are operated by the spacer operating cam through the medium of the spacer bail, spacer rod, spacing rack, (Figures 17 and 18) and pointer racks meshed with gear segments on the lower ends of the pointers (Figure 17). The operation of the pointers, however, is controlled by the space bar.

When the space bar is depressed, in addition to setting up the combination in the perforating mechanism, an extension on the space bar lever moves the justification pointers feed pawl into engagement with the justification pointers spacing rack through the intermediate pawl and intermediate pawl latch, mounted on the spacer rod (Figure 18). At practically the same time as the tape is being perforated, the spacer bail roller is riding up onto the high part of the spacer operating cam and the spacer rod, which is attached to the spacer bail, will be moved towards the left. The justification pointers feed pawl will in turn advance the justification pointers spacing rack one tooth and slide the same distance (the rack is attached to the slide). Studs at the center and right end of the spacing rack slide are engaged in slots in the lower ends of the rack slide levers, the pivot points of which are mounted on the pivot adjusting blocks (Figure 17). The upper ends of the rack slide levers engage the left and right pointers racks, and in turn these two racks engage the teeth on the gear segments of the justification pointers. Thus, each time the spacing rack and slide are advanced one tooth, the right-hand justification pointer and scale will be moved a distance equivalent to the minimum thickness of the space bands and the left-hand pointer a distance equivalent to the widest spacing. Near the end of the left stroke of the spacer bail rod the reset extension on the intermediate pawl is moved against the reset lug, bringing the upper extension of the intermediate pawl into engagement with its latch (Figure 18).

The retaining pawl holds the justification pointers spacing rack while the feed pawl is being advanced to the next tooth on the rack. The pivot adjusting blocks and thumb screws are provided to regulate the travel of the justification pointers to accommodate the difference in the sizes of various space bands and fonts of type used (Figure 17).

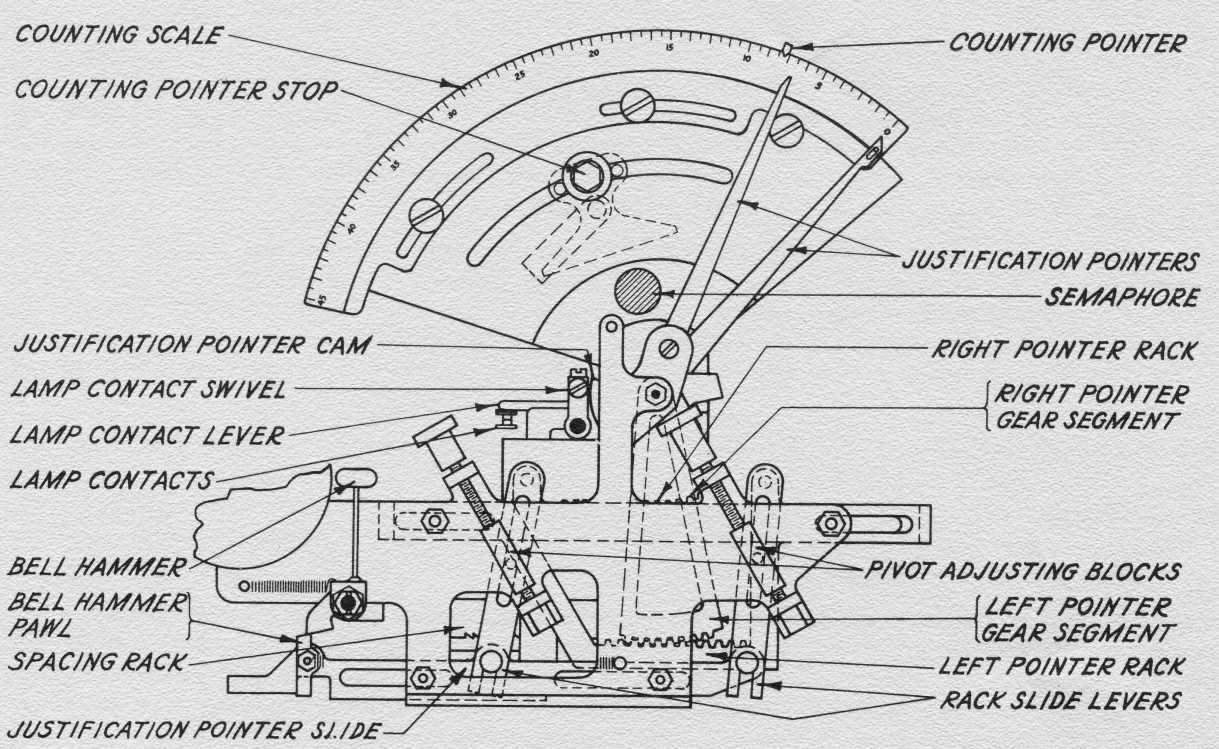

FIGURE 17

A bell is provided on the justification pointers rack mounting bracket to warn the operator that 9 space bands have been used in the line. Pivoted to the right of the bell is the bell hammer, the lower end of which is extended downward into the path of the bell hammer pawl. This bell hammer pawl is pivoted near the left end of the spacing rack slide. As the spacing rack slide moves to the left, for the 8th space, the bell hammer pawl engages the bell hammer, rotating it clockwise. When the spacing rack slide has been moved nine spaces, the bell hammer is tripped off the bell hammer pawl, the bell hammer spring rotating the hammer against the bell. The justification pointers spacing mechanism is arranged to provide for indicating a maximum of 12 space bands to a line.

END-OF-LINE SIGNAL LAMP

A signal lamp is lighted to warn the operator when the counting pointer approaches the justification range. This is accomplished by a pair of contacts that are controlled by cams which form a part of the counting pointer and the left-hand justification pointer (Figure 16 and 17). The lamp contact swivel rollers are held against the counting and left justification pointers cams by the lamp contact lever spring. As the counting pointer moves toward the right and the left justification pointer toward the left, the high portions of their cams will move the swivel toward the left and the lamp contact operating lever which is attached to it will move down, closing the lamp contacts.

COUNTING AND JUSTIFICATION POINTERS RETURN ("RET" KEY)

Normally the driven member of the return clutch, located to the rear of the main shaft, is held out of engagement with the driving member by the return clutch throw-out lever (Figure 18). When the "Ret" (return) key is depressed, an extension on the keylever pulls the right end of the return actuating lever down. The clutch throw-out lever trip-off pawl, which is attached to the left end of the return actuating lever, will move the clutch throw-out lever out of engagement with the shoulder on

the driven clutch member. The return clutch spring will move the driven clutch member into engagement with the driving member, causing the return cam to be revolved. The return bail roller (attached to the left end of the return bail) will ride up onto the high portion of the return cam, rotating the counting pointer clutch release lever through the medium of the vertical link which connects the right end of the return bail to the counting clutch release lever.

The end of the shaft which forms a part of the front counting clutch friction disc (Figure 16) is engaged with the adjusting screw on the upper end of the counting clutch release lever. Therefore, when the counting pointer clutch release lever is rotated, the front friction disc will remove the tension on the counting pointer, allowing the counting pointer spring to return the counting pointer to its stop. This counting pointer stop is adjustable to conform to the various pica widths of the column to be set up.

A vertical link attached to the rear end of the retaining pawl release lever engages the return bail (Figure 18). At the same time the right end of the return bail moves up to disengage the counting pointer clutch, the front end of the retaining pawl release lever will be moved down against the retaining pawl, disengaging it from the justification pointers spacing rack. The justification pointers will also be returned to their zero position by their springs.

Near the end of each revolution of the return cam, a stud which is attached to the cam will move against the rear extension of the clutch throw-out lever trip-off pawl. Should the "Ret" (return) key be held depressed, the return clutch throw-out lever will be held out of engagement with the shoulder on the clutch driven member until the return cam stud moves the trip-off pawl out of engagement with the clutch throw-out lever. In this way, only one revolution of the return cam is permitted each time the "Ret" key is depressed.

REPEAT KEY

When the repeat key is depressed in conjunction with any other key, it provides continuous operation of that character or function. In operating practice, this feature is used to facilitate the spacing out of the tape and perforating a series of rub-outs. This is accomplished by the rear extension of the repeat key moving up against the non-repeat latch, raising it out of the path of the clutch stop lever.

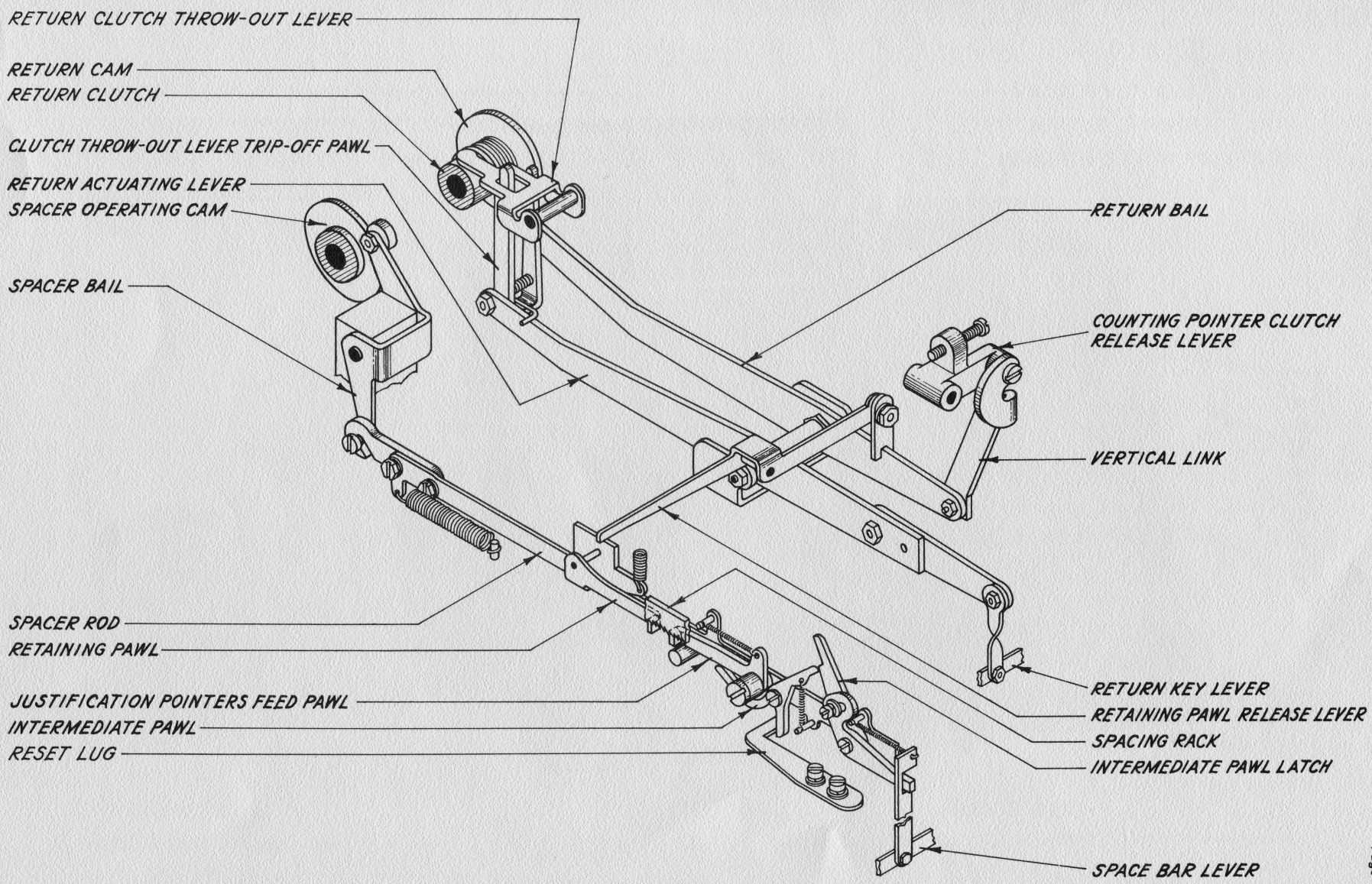
RETURN CLUTCH THROW-OUT LEVER
RETURN CAM
RETURN CLUTCH
CLUTCH THROW-OUT LEVER TRIP-OFF PAWL
RETURN ACTUATING LEVER
SPACER OPERATING CAM
SPACER BAIL
RETURN BAIL
COUNTING POINTER CLUTCH RELEASE LEVER
VERTICAL LINK
SPACER ROD
RETAINING PAWL
JUSTIFICATION POINTERS FEED PAWL
INTERMEDIATE PAWL
RESET LUG
RETURN KEY LEVER
RETAINING PAWL RELEASE LEVER
SPACING RACK
INTERMEDIATE PAWL LATCH
SPACE BAR LEVER

FIGURE 18

MEMORANDA

MEMORANDA